SONY

HD TRINITRON® COLOR MONITOR

HDM-2830
HDM-2830E

Chassis No.SCC-C78A-A(HDM-2830)
Chassis No.SCC-C52A-A(HDM-2830E)

HDVS

OPERATION AND MAINTENANCE MANUAL

1st Edition

Serial No. 2000001 and Higher (HDM-2830)

Serial No. 2000027 and Higher (HDM-2830E)

Warning—This equipment generates, uses, and can radiate radio frequency energy and if not installed and used in accordance with the instructions manual, may cause interference to radio communications. It has been tested and found to comply with the limits for a Class A computing device pursuant to Subpart J of Part 15 of FCC Rules, which are designed to provide reasonable protection against such interference when operated in a commercial environment. Operation of this equipment in a residential area is likely to cause interference in which case the user at his own expense will be required to take whatever measures may be required to correct the interference.

Important—To insure that the complete system (including this peripheral) is capable of complying with the FCC requirements, it is recommended that the user make sure that the individual equipment of the complete system has a label with one of the following statements.
"This equipment has been tested with a Class A Computing Device and has been found to comply with Part 15 of FCC rules."
—or—
"This equipment complies with the requirements in Part 15 of FCC rules for a Class A Computing Device."
—or equivalent.

This apparatus complies with the Class A limits for radio noise emissions set out in Radio Interference Regulations of CANADA.

Cet appareil est conforme aux normes Classe A, pour bruits radioélectriques. Tel que spécifier dans le Règlement sur le brouillage radioélectrique du CANADA.

CONFIDENTIAL

The material contained in this manual consists of information that is the property of Sony Corporation and is intended solely for use by the purchasers of the equipment described in this manual.
Sony Corporation expressly prohibits the duplication of any portion of this manual or the use thereof for any purpose other than the operation or maintenance of the equipment described in this manual without the express written permission of Sony Corporation.

CONFIDENTIEL

Le matériel contenu dans ce manuel consiste en informations qui sont la propriété de Sony Corporation et sont destinées exclusivement à l'usage des acquéreurs de l'équipement décrit dans ce manuel.
Sony Corporation interdit formellement la copie de quelque partie que ce soit de ce manuel ou son emploi pour tout autre but que des opérations ou entretiens de l'équipement à moins d'une permission écrite de Sony Corporation.

VERTRAULICH

Das in dieser Anleitung enthaltene Material besteht aus Informationen, die Eigentum der Sony Corporation sind, und ausschließlich zum Gebrauch durch den Käufer der in dieser Anleitung beschriebenen Ausrüstung bestimmt sind.
Die Sony Corporation untersagt ausdrücklich die Vervielfältigung jeglicher Teile dieser Anleitung oder den Gebrauch derselben für irgendeinen anderen Zweck als die Bedienung oder Wartung der in dieser Anleitung beschriebenen Ausrüstung ohne ausdrückliche schriftliche Erlaubnis der Sony Corporation.

SAFETY-RELATED COMPONENT WARNING!!

COMPONENTS IDENTIFIED BY SHADING AND MARK ⚠ ON THE SCHEMATIC DIAGRAMS, EXPLODED VIEWS AND IN THE PARTS LIST ARE CRITICAL TO SAFE OPERATION. REPLACE THESE COMPONENTS WITH SONY PARTS WHOSE PART NUMBERS APPEAR AS SHOWN IN THIS MANUAL OR IN SUPPLEMENTS PUBLISHED BY SONY. CIRCUIT ADJUSTMENTS THAT ARE CRITICAL TO SAFE OPERATION ARE IDENTIFIED IN THIS MANUAL. FOLLOW THESE PROCEDURES WHENEVER CRITICAL COMPONENTS ARE REPLACED OR IMPROPER OPERATION IS SUSPECTED.

ATTENTION AU COMPOSANT AYANT RAPPORT A LA SÉCURITÉ!!

LES COMPOSANTS IDENTIFIÉS PAR UN TRAMÉ ET UNE MARQUE ⚠ SUR LES DIAGRAMMES SCHÉMATIQUES, LES VUES EXPLOSÉES ET LA LISTE DES PIÈCES SONT CRITIQUES POUR LA SÉCURITÉ DE FONCTIONNEMENT. NE REMPLACER CES COMPOSANTS QUE PAR DES PIÈCES SONY DONT LES NUMÉROS SONT DONNÉS DANS CE MANUEL OU DES SUPPLÉMENTS PUBLIÉS PAR SONY. LES RÉGLAGES DU CIRCUIT QUI SONT CRITIQUES POUR LA SÉCURITÉ DE FONCTIONNMENT SONT IDENTIFIÉS DANS CE MANUEL. SUIVRE LES PROCÉDURES QUAND LES COMPOSANTS CRITIQUES SONT REMPLACÉS OU LE FONCTIONNEMENT IMPROPRE EST SUSPECTÉ.

CAUTION!!

DO NOT USE THE EXTERNAL DEGAUSSER TO DEMAGNETIZE THE SCREEN.
BE SURE TO USE THE DEGAUSS SWITCH ON THE FRONT PANEL.

ATTENTION!!

NE PAS UTILISER DE DÉMAGNÉTISEUR EXTÉRITUR POUR DÉMAGNÉTISER L'ÉCRAN.
UTILISER LA TOUCH DE DÉMAGNÉTISATION (DEGAUSS) SUR LE PANNEAU FRONTAL.

TABLE OF CONTENTS

1. OPERATION

1-1. Overview 1-1
1-2. Location and Functions of Parts and Controls 1-4
1-2-1. Front Panel 1-4
1-2-2. Rear Panel 1-6
1-2-3. Sub-Control Panel 1-8
1-3. Connection and Preparation at Installation 1-19
1-3-1. Selecting the Operating Voltage 1-19
1-3-2. Connection Example 1-20
1-3-3. Correcting Beam Landing 1-21
1-4. Setting Switches according to the Input Signals 1-23
1-5. Adjustment 1-24
1-5-1. Selecting Adjustment Modes 1-24
1-5-2. Adjusting Color Temperature 1-26
1-5-3. Adjusting Convergence 1-32
1-5-4. Resetting the Adjustment Data 1-35
1-5-5. Checking the Unit with the Internal Test Signals 1-37
1-6. Specifications 1-39

2. EXTERNAL DIMENSIONAL DIAGRAM, FIXING METHOD, AND DISASSEMBLY

2-1. External Dimensional Diagram and Fixing Method 2-1
2-2. Removal of the Cabinet 2-2
2-3. Removal of the Bezel Assembly 2-2
2-4. Inspection Method of the R Board 2-3
2-5. Inspection Method of the CA Board 2-3
2-6. Removal of the GA Board 2-4
2-7. Removal of the F Board 2-4
2-8. Removal of the Switching Regulator (CR-15EN) 2-5
2-9. Inspection Method of the E Board 2-5
2-10. Removal of the Switching Regulator (SF-11) 2-6
2-11. Removal of the Switching Regulator (TK-18) 2-6
2-12. Removal of the Holder (Z) 2-7
2-13. Inspection Method of the DC Board 2-7
2-14. Removal of the Holder (B) 2-8
2-15. Inspection Method of the BG Board 2-8
2-16. Removal of the QC Board 2-9
2-17. Removal of Flyback Transformer and HV Block 2-9
2-18. Removal of the Board Cover (D) (SUB-Control Panel) 2-10
2-19. Removal of the Boards D, JA and JB 2-10
2-20. Removal of the Boards W and N 2-11
2-21. Removal of the Control Panel Assembly 2-11
2-22. Removal of the Picture tube 2-12
2-23. Installing and Removal Method of High Voltage Cable 2-12

3. CIRCUIT DESCRIPTION 3-1

4. ADJUSTMENT

4-1. Internal View Diagram 4-1
4-2. Board Arrangement Diagram 4-2
4-3. Quick Reference 4-3
4-4. SUB Control Panel 4-4
4-5. Set-Up Adjustment 4-5
4-6. Safety Related Adjustment 4-19
4-7. Circuit Adjustment 4-23

5. DIAGRAMS

5-1. Block Diagram 5-1
5-2. Frame Wiring Diagram 5-15
5-3. Mounting and Schematic Diagrams 5-19
BA Board 5-21
BB Board 5-26
BD Board 5-32
BE Board 5-37
BF Board 5-42
BG Board 5-47
BN Board 5-54
CA and CB Boards 5-60
D Board 5-68
DA Board 5-74
DB Board 5-79
DC Board 5-84
E, K and P Boards 5-90
GA, F, JA, JB, L and YA Boards 5-98
N Board 5-103
QA, QB, QC and QD Boards 5-107
R and W Boards 5-112
ZA Board 5-118
ZC Board 5-123
ZD Board 5-128
ZN Board 5-134
XA Board 5-139
5-4. Semiconductors 5-141

6. EXPLODED VIEWS

6-1. Bezel 6-1
6-2. Picture tube 6-2
6-3. Drawer Block 6-3
6-4. Bottom Chassis 6-4
6-5. Signal Block 6-5
6-6. Z Block 6-6

7. ELECTRICAL PARTS LIST 7-1

SECTION 1 OPERATION

1-1. Overview

The HDM-2830/2830E is a 28-inch color video monitor for the high definition video systems which conform to the BTA/SMPTE standard.

Adaptable to a variety of input signal format

BTA/SMPTE standard

The monitor has a 16:9 aspect ratio and uses the tri-level bipolar sync, which conforms to the BTA/SMPTE standard, and can receive the BTA S-001/SMPTE 240M standard Y/P_B/P_R signal or GBR signal.

Other input signal formats

Besides the BTA/SMPTE standard signal, the monitor can receive the original HDVS format signal* and 525-line-non-interlaced signal (IDTV decoder output).

Two sets of input connectors

The monitor is supplied with two input channels, A and B. You can select either one with the INPUT selector.

High quality picture

Flat and square screen

The monitor employs a Super Fine Pitch Trinitron picture tube whose surface is almost flat (the radius of the curvature is 2,000 mm.) and which has a squarely cornered screen, which provides a clear picture on the entire screen.

High picture resolution

The Super Fine Pitch Trinitron picture tube, which has a 0.35 mm phosphor trio pitch, realizes more than 1,000 TV lines of horizontal resolution.

High contrast with less reflected light

A gray panel and AR (anti-reflection) coating on tube face absorb most of the ambient light, and give an excellent picture contrast.

---

* RGB signal with a 5:3 aspect ratio
(When the original HDVS format signal is input, small pedestal areas (black areas) appear on the right and left of an HD picture.)

Multiple adjustment functions

Sub-control panel in the drawer

The controls are located in the sub-control panel in the drawer, and you can access them easily by pulling out the drawer. On the sub-control panel, there are an aperture control, input mode selector, contrast and brightness preset controls, convergence control, color temperature control, and other controls to adjust the picture.

Seven types of test signals

The built-in test signal generator generates seven test signals; crosshatch, inverted double hatch, flat field, set up, gray scale, dot and PLUGE* signals, for checking the monitor.

Convergence adjustment

The digital convergence adjustment circuitry makes fine and easy convergence adjustment possible over all the screen.

Advanced adjustment circuitry

Beam landing adjustment

You can easily make adjustment with the beam landing adjustment circuitry if the beam landing is affected by horizontal terrestrial magnetism, when you install the monitor.

Aperture compensation

The aperture adjustment circuitry adjusts only the Y signal decoded from a Y/P_B/P_R signal or a GBR signal.

Stable color temperature

Both the beam detector and the pulse adder control the black level, brightness and contrast to keep the color temperature stable for a long time.

Excellent focus characteristics

The electrostatic convergence adjustment circuit, and horizontal and vertical dynamic focus circuit provide an optimum focus over the entire screen.

* PLUGE=Picture Line Up Generating Equipment

Others

Internal or external sync signal which is selectable

You can use the internal sync signal or an external sync signal fed to the EXT SYNC connector, by selecting either one with the SYNC selector. If horizontal and vertical sync signals are fed to the HD and VD connectors respectively, these signals will be selected.

Sync signal display

When you press the H delay switch, the horizontal sync signal appears at 1/4 of the screen width from the left of the screen, and when you press the V delay switch, the vertical sync signal appears in the center. To monitor both signals as pulse-cross signal, press both buttons.

Attaching an optional monitor hood

An optional VF-503 monitor hood can be attached to eliminate light reflection on the screen.

1-2. Location and Functions of Parts and Controls

1-2-1. Front Panel

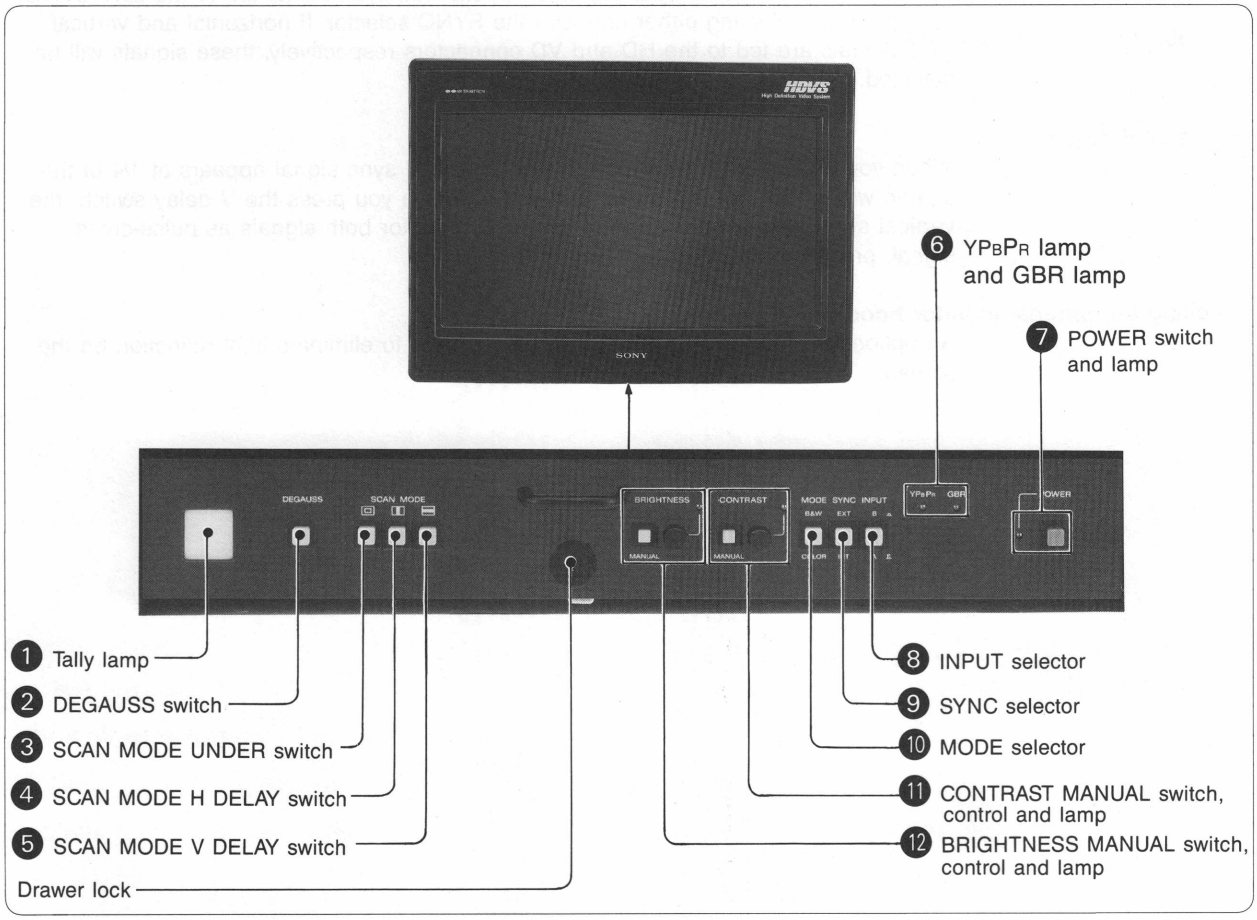

1 Tally lamp

When the TALLY switch on the sub-control panel is set to ON, this lamp lights while the power of the monitor is on. When the TALLY switch is set to OFF, this lamp does not light.

Open the drawer and insert the supplied number plate of choice.

2 DEGAUSS switch

Press this switch with the unit on to demagnetize the picture tube. This switch does not operate when pressed again right after degaussing has been made. Wait for more than five minutes to use the switch again.

3 SCAN MODE UNDER (underscan) switch

Press this switch for 3% underscanning. The display size is reduced by approximately 8% and the signal normally scanned outside of the screen is displayed on the screen. To resume normal scanning, press the switch again.

4 SCAN MODE H DELAY switch

Press this switch to monitor the horizontal sync signal. The picture moves right and the sync signal appears at 1/4 of the screen width from the left of the screen. At this time, the pedestal of the picture increases. Press the switch again to place the picture in the normal position.

5 SCAN MODE V DELAY switch

Press this switch to monitor the vertical sync signal. The picture moves down and the sync signal appears in the center of the screen. At this time, the pedestal of the picture increases. Press the switch again to place the picture in the normal position.

- When you press both the SCAN MODE V DELAY and SCAN MODE H DELAY switches, the picture displays pulse-cross.

6 YP_BP_R lamp and GBR lamp

The appropriate lamp lights to indicate the mode selected on the JA board when the A or B input is selected by the INPUT selector 8.

7 POWER switch and lamp

Press to turn on the unit. When power is turned on, the lamp lights and the automatic degaussing circuit is activated to demagnetize the picture tube. The picture will not be stable for about 5 seconds until demagnetization is completed.

8 INPUT selector

⊓ **A:** To monitor the signal fed to the INPUT A connectors.
⊓ **B:** To monitor the signal fed to the INPUT B connectors.

9 SYNC selector

⊓ **INT:** To use the composite sync signal supplied with the G signal of the GBR signal, or with the Y signal of the $Y/P_B/P_R$ signal.
⊓ **EXT:** To use an external sync signal fed to the EXT SYNC connector.

The HD and VD signals, if they are supplied to the HD and VD connectors, have priority over the other two sync signals regardless of the switch setting.

10 MODE selector

⊓ **COLOR:** To use the monitor in color mode. Normally select this setting.
⊓ **B & W:** To set the monitor to black and white operation.

11 CONTRAST MANUAL switch, control and lamp

Press the switch (the lamp lights) and turn the control to adjust the contrast of the picture. When the lamp is not lit, the contrast level is set to the preset value which has been set by the PRESET CONTRAST control on the JA board.

12 BRIGHTNESS MANUAL switch, control and lamp

Press the switch (the lamp lights) and turn the control to adjust the brightness of the picture. When the lamp is not lit, the brightness level is set to the preset value which has been set by the PRESET BRIGHT control on the JA board.

⊓ indicates that the switch is not depressed and
⊓ indicates that it is depressed.

1-2-2. Rear Panel

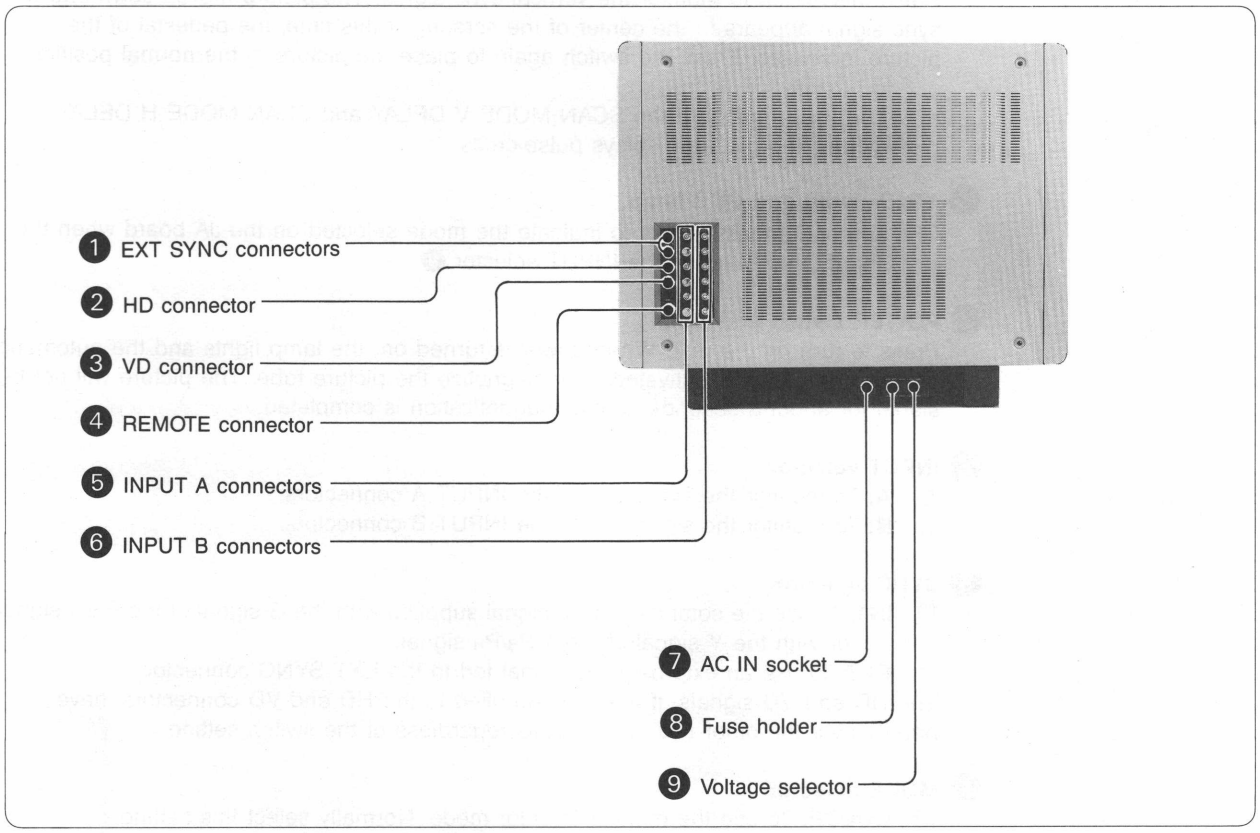

1 EXT (external) SYNC connectors (BNC)
External sync signal (composite) input. One of the two connectors is used for a bridging connection. If you do not use it, attach the supplied 75-ohm termination plug.

2 HD (horizontal drive) connector (BNC)
External horizontal sync signal input. (The input signal is terminated with 75-ohms inside.)

3 VD (vertical drive) connector (BNC)
External vertical sync signal input. (The input signal is terminated with 75-ohms inside.)

4 REMOTE connector (10 pin)

Pin No.	Signal		Pin No.	Signal
	OPEN	GND		
1	COLOR	B & W	6	GND
2	INPUT A	B	7	—
3	TALLY OFF	ON	8	—
4	SYNC INT	EXT	9	—
5	LOCAL	REMOTE	10	—

When you use the connector, set pin No.5 & 6 to GND, and the pin corresponding to your desired mode to OPEN or GND.
For example, when you change the monitor to the B&W mode, set pin No.1 to GND.
If you set No.5 to GND, the remote control operation has priority over the setting of the selectors on the front panel and sub-control panel.

❺ **INPUT A connectors** (BNC)

❻ **INPUT B connectors** (BNC)
HDVS signals or 525-line-non-interlaced signals may be used. Set the switches on the JA board according to the format of the input signals. (Refer to "1-4. Setting Switches according to the Input Signals".) To select which input signals, A or B, to monitor, press the INPUT select button on the front panel.
Each input has a connector for a bridging connection. If you do not use the connector for the bridging connection, attach the supplied 75-ohm termination plug.

❼ **AC IN socket**
Connect the supplied AC power cord.

❽ **Fuse holder**
Use a 6.3A fuse for operation on 100 – 120V AC, or a T4A fuse for operation on 220 – 240V AC.

❾ **Voltage selector**
Set to the local power line voltage, 100 – 120V AC or 220 – 240V AC.

1-2-3. Sub-Control Panel

Insert the supplied key into the drawer keyhole, turn it 90° clockwise and pull the drawer out.

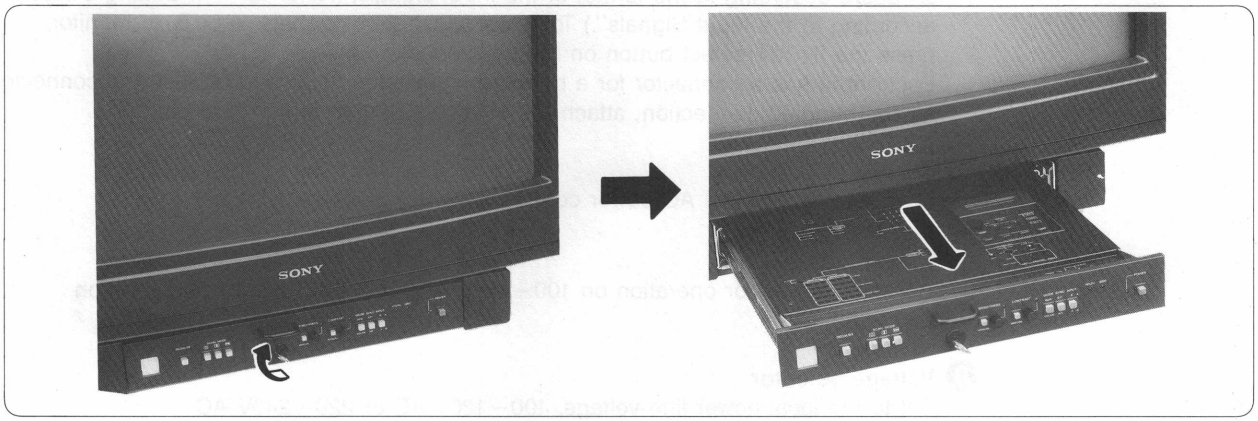

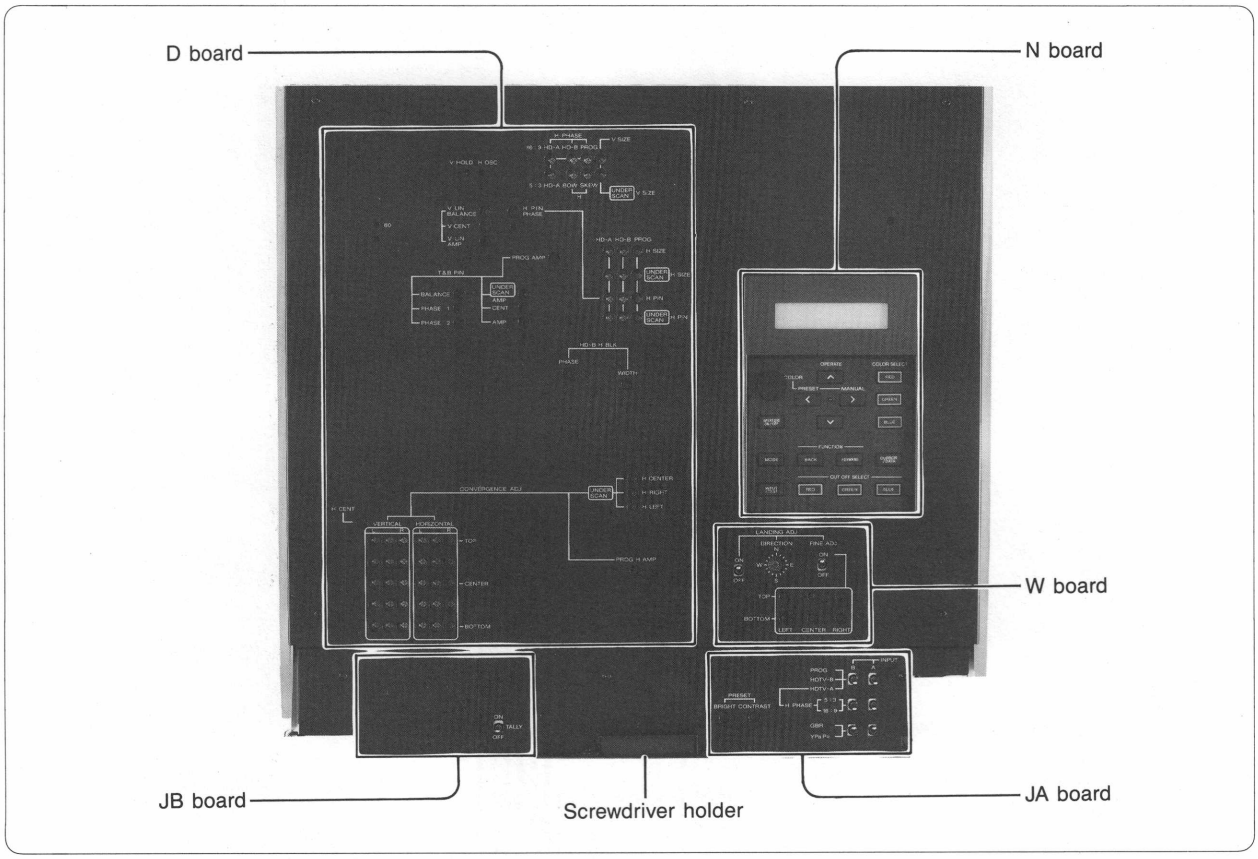

Note

To adjust the unit with the controls on the sub-control panel, wait for more than 30 minutes after the power is turned on to fully warm up the unit.

To adjust the controls, use the supplied screwdriver stored in the screwdriver holder on the panel.

D board (Geometry distortion correction)

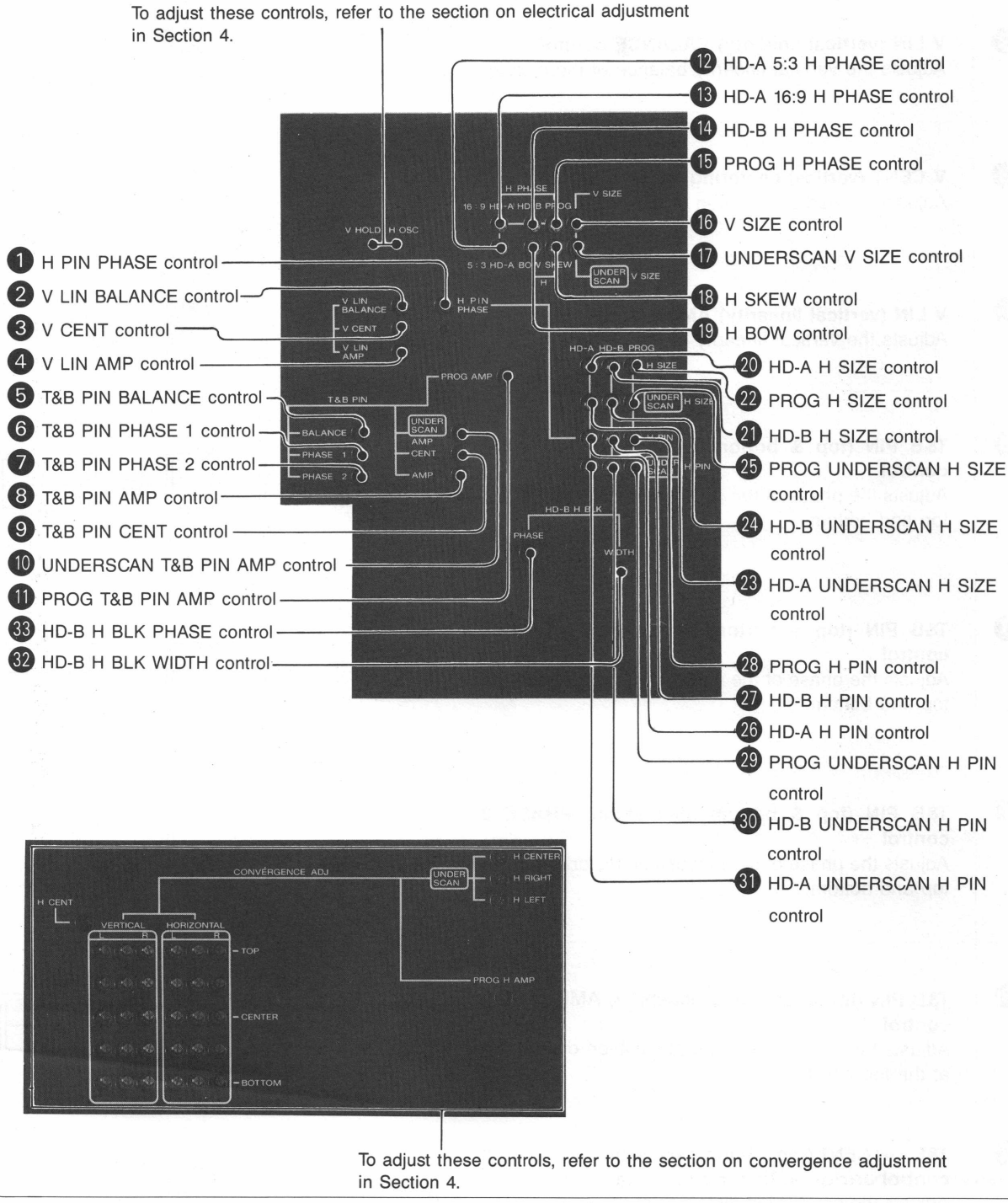

❶	**H PIN (horizontal pincushion) PHASE control** Adjusts the phase of the pincushion distortion at the sides.	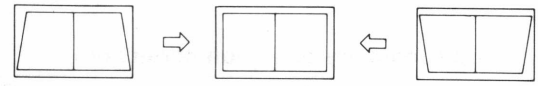
❷	**V LIN (vertical linearity) BALANCE control** Adjusts the vertical linearity balance of the picture.	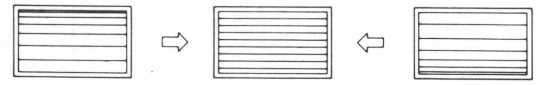
❸	**V CENT (vertical centering) control** Adjusts the vertical position of the picture.	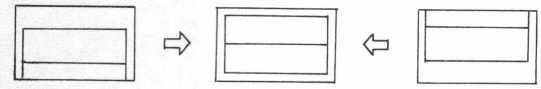
❹	**V LIN (vertical linearity) AMP control** Adjusts the vertical linearity of the picture.	
❺	**T&B PIN (top & bottom pincushion) BALANCE control** Adjusts the phase of the pincushion distortion at the top and bottom.	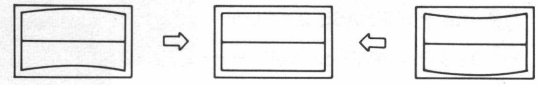
❻	**T&B PIN (top & bottom pincushion) PHASE 1 control** Adjusts the phase of the pincushion distortion at the top and bottom.	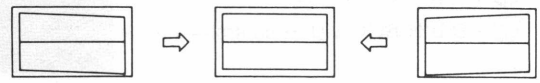
❼	**T&B PIN (top & bottom pincushion) PHASE 2 control** Adjusts the phase of the pincushion distortion at the top and bottom.	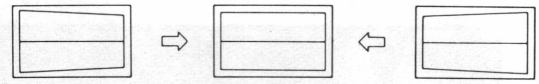
❽	**T&B PIN (top & bottom pincushion) AMP control** Adjusts the amplitude of the pincushion distortion at the top and bottom.	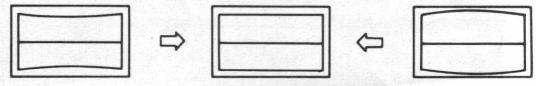
❾	**T&B PIN CENT (top & bottom pincushion centering) control** Adjusts the pincushion distortion at the center of the screen.	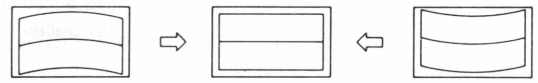

⑩ **UNDERSCAN T&B PIN (underscan top and bottom pincushion) AMP control**
Adjusts the amplitude of the top and bottom pincushion distortion of the underscanned picture. Adjust this control after adjustment with the T & B PIN AMP control ⑧.

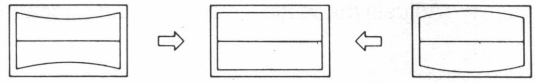

⑪ **PROG T&B PIN (progressive scan top & bottom pincushion) AMP control**
Adjusts the pincushion distortion at the top and bottom when you set the INPUT A/B system selector on the JA board to PROG. Adjust this control after adjusting the T&B PIN AMP control ⑧.

⑫ **HD-A 5:3 H (HDTV-A original format horizontal) PHASE control**
Adjusts the horizontal phase of the input signal when you set the INPUT A/B system selector to HDTV-A and the INPUT A/B H PHASE selector to 5:3 on the JA board.

Note
This control does not operate when you are monitoring the internal test signal with the INPUT A/B system selector set to HDTV-A. The format of the internal test signal is the new HDVS format and the phase can be adjusted with the HD-A 16:9 H PHASE control regardless of the INPUT A/B H PHASE selector setting.

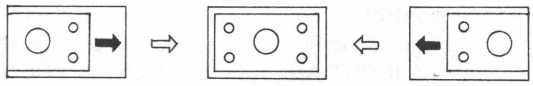

⑬ **HD-A 16:9 H (HDTV-A new format horizontal) PHASE control**
Adjusts the horizontal phase of the input signal when you set the INPUT A/B system selector on the JA board to HDTV-A and the INPUT A/B H PHASE selector to 16:9 on the JA board.

⑭ **HD-B H (HDTV-B horizontal) PHASE control**
Adjusts the horizontal phase of the input signal when you set the INPUT A/B system selector to HDTV-B.

⑮ **PROG H (progressive scan horizontal) PHASE control**
Adjusts the horizontal phase of the input signal when you set the INPUT A/B system selector to PROG.

⑯	**V SIZE (vertical size) control** Adjusts the vertical size of the picture.	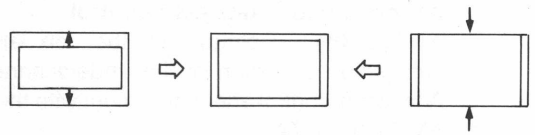
⑰	**UNDERSCAN V SIZE (vertical size) control** Adjusts the vertical size of the underscanned picture.	
⑱	**H SKEW (horizontal skew) control** Adjusts the skew of the picture.	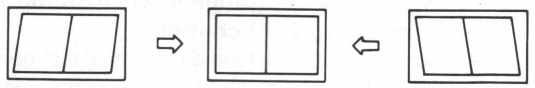
⑲	**H BOW (horizontal bow) control** Adjusts the bow of the picture.	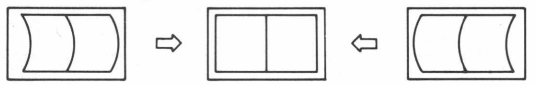
⑳	**HD-A H SIZE (HDTV-A horizontal size) control** Adjusts the horizontal size of the picture when you set the INPUT A/B system selector to HDTV-A.	
㉑	**HD-B H SIZE (HDTV-B horizontal size) control** Adjusts the horizontal size of the picture when you set the INPUT A/B system selector to HDTV-B.	
㉒	**PROG H SIZE (progressive scan horizontal size) control** Adjusts the horizontal size of the picture when you set the INPUT A/B system selector to PROG.	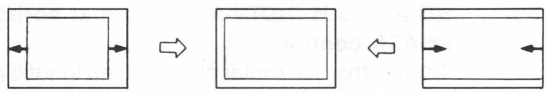
㉓	**HD-A UNDERSCAN H SIZE (HDTV-A underscan horizontal size) control** Adjusts the width of the picture when you set the INPUT A/B system selector to HDTV-A and SCAN MODE UNDER switch to ON.	
㉔	**HD-B UNDERSCAN H SIZE (HDTV-B underscan horizontal size) control** Adjusts the width of the picture when you set the INPUT A/B system selector to HDTV-B and SCAN MODE UNDER switch to ON.	
㉕	**PROG UNDERSCAN H SIZE (progressive scan underscan horizontal size) control** Adjusts the width of the picture when you set the INPUT A/B system selector to PROG and SCAN MODE UNDER switch to ON.	

㉖	**HD-A H PIN (HDTV-A horizontal pincushion) control** Adjusts the pincushion distortion at the sides when you set the INPUT A/B system selector to HDTV-A.	
㉗	**HD-B H PIN (HDTV-B horizontal pincushion) control** Adjusts the pincushion distortion at the sides when you set the INPUT A/B system selector to HDTV-B.	
㉘	**PROG H PIN (progressive scan horizontal pincushion) control** Adjusts the pincushion distortion at the sides when you set the INPUT A/B system selector to PROG.	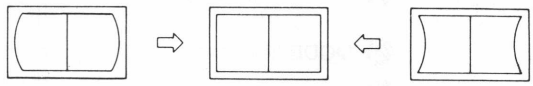
㉙	**PROG UNDERSCAN H PIN (progressive scan underscan horizontal pincushion) control** Adjusts the pincushion distortion at the sides when you set the INPUT A/B system selector to PROG and SCAN MODE UNDER switch to ON.	
㉚	**HD-B UNDERSCAN H PIN (HDTV-B underscan horizontal pincushion) control** Adjusts the pincushion distortion at the sides when you set the INPUT A/B system selector to HDTV-B and SCAN MODE UNDER switch to ON.	
㉛	**HD-A UNDERSCAN H PIN (HDTV-A underscan horizontal pincushion) control** Adjusts the pincushion distortion at the sides when you set the INPUT A/B system selector to HDTV-A and SCAN MODE UNDER switch to ON.	
㉜	**HD-B H BLK WIDTH (HDTV-B horizontal blanking width) control** Adjusts the width of the horizontal blanking part when you set the INPUT A/B system selector to HDTV-B.	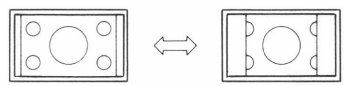
㉝	**HD-B H BLK PHASE (HDTV-B horizontal blanking phase) control** Adjusts the phase of the horizontal blanking part when you set the INPUT A/B system selector to HDTV-B.	

N board (color temperature and convergence adjustment and internal test signal selection)

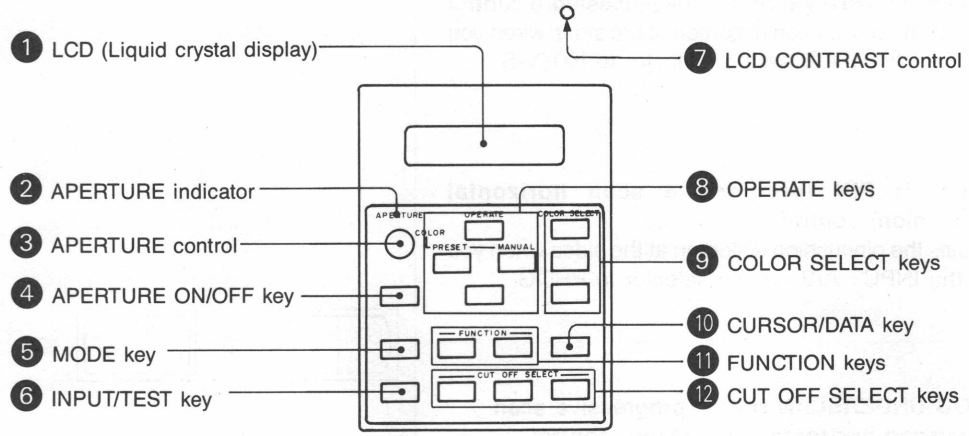

1 LCD
The display shows adjustment mode, data and messages to guide key operation.

2 APERTURE indicator
The indicator lights up when the APERTURE ON/OFF key 4 is set to ON and the APERTURE control 3 is activated for aperture compensation.

3 APERTURE control
Turn the control for aperture compensation (H detail response). Set the APERTURE ON/OFF key 4 to ON to activate the control.

4 APERTURE ON/OFF key
Set the key to ON and use the APERTURE control 3 for the aperture compensation. When the key is set to OFF, the control does not function and the frequency response of the video amplifiers is flat.

Lamps of the LCD and keys
Any keys that are lit and indicating current operation, as well as the LCD displays, will go off about 5 minutes after the last key is pressed.

⑤ MODE key

Press this key to change the adjustment mode. Every time the key is pressed, the mode changes as follows.

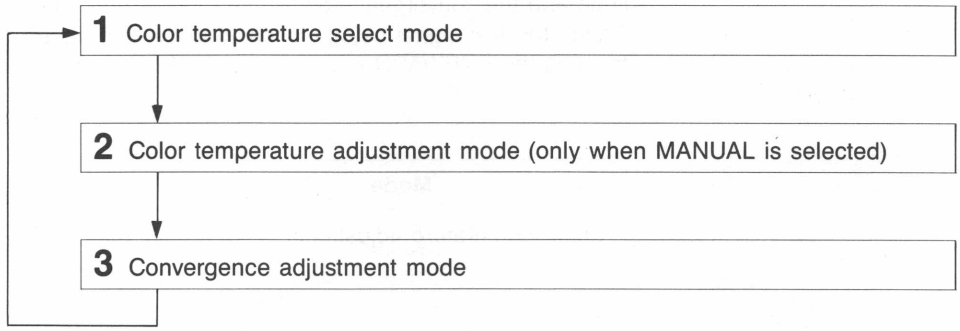

⑥ INPUT/TEST key

Press the key to select which signal, the internal test signal or the input signal, to display.

Note

If you display an input signal whose sync signal has a different phase from that of the internal test signal, the horizontal position of the picture may shift. In this case, adjust the phase of the input signal with the H PHASE control (⑫ to ⑮ on the D board).

⑦ LCD CONTRAST control

Turn the control to adjust the contrast of the LCD.

⑧ OPERATE keys

These keys function differently depending on the adjustment mode. Press these keys to adjust the color temperature or convergence in each mode. In the color temperature select mode, press the COLOR PRESET (<) key or the COLOR MANUAL key (>) to select the preset color temperature or the color temperature which you have adjusted.

⑨ COLOR SELECT keys

Press one of these keys to select the color for color temperature adjustment. The selected color is indicated as "G", "B" or "R" on the LCD.

⑩ CURSOR/DATA key

Use this key to adjust the convergence.

For coarse adjustment: Every time the key is pressed, the cursor moves to the next adjustment point on the monitor screen. The convergence at the point where the cursor is located can be adjusted with the OPERATE keys.

For fine adjustment: Pressing this key stops the cursor blinking and enables adjustment at the point where the cursor is located. Pressing this key again starts cursor blinking again and enables to move the cursor to a desired position with the OPERATE keys.

⓫ FUNCTION keys

Press the appropriate key to change functions in the color temperature adjustment mode and the convergence adjustment mode, and press the appropriate key to change the test signal being displayed in the test mode.
Pressing the FORWARD key changes the function or the test signal in the following order.

Mode	Function or test signal
Color temperature adjustment	Bias 1 Gain Bias 2
Convergence adjustment	Coarse adjustment Fine adjustment
Test mode	Flat field Setup Gray scale Crosshatch Inverted double-hatch Dot PLUGE*

Pressing the BACK key returns the function or the test signal to the previously selected one.

⓬ CUT OFF SELECT keys

Press GREEN, BLUE or RED key to cut the beam of the corresponding color. To monitor single colors for beam landing adjustment, cut off the two other colors by pressing their keys.

* PLUGE=Picture Line Up Generating Equipment

W board (beam landing)

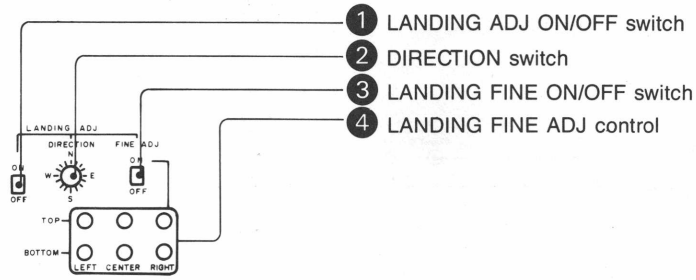

1 LANDING ADJ ON/OFF switch
Set the switch to ON to activate the beam landing (purity) correction circuit and adjust it with the DIRECTION switch 2. Keep the switch to ON after adjustment is over.

2 DIRECTION switch
Turn the switch to correct the beam landing if there is impurity caused by horizontal terrestrial magnetism on the screen. To use this switch, set the LANDING ADJ ON/OFF switch 1 to ON.

3 LANDING FINE ON/OFF switch
Set the switch to ON for fine adjustment of the beam landing with the LANDING FINE ADJ controls 4 when impurity still remains after adjustment with switch 2.

4 LANDING FINE ADJ (adjustment) controls
Turn these controls for fine adjustment of the beam landing. Use the appropriate control which corresponds to the portion on the screen to be adjustd.

JA board (brightness and contrast adjustment and input mode selection)

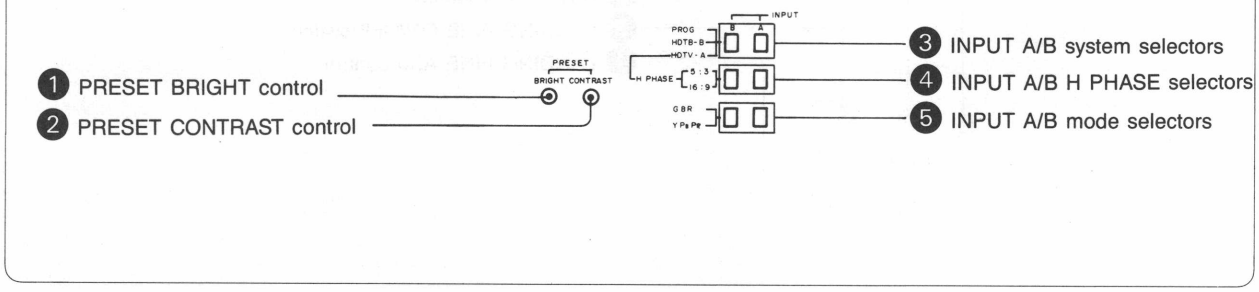

1 PRESET BRIGHT (brightness) control
Turn the control to preset the picture brightness. The level is set to the preset level when you set the BRIGHTNESS/MANUAL switch on the front panel to OFF.

2 PRESET CONTRAST control
Turn the control to preset the picture contrast. The level is set to the preset level when you set the CONTRAST/MANUAL switch on the front panel to OFF.

3 INPUT A/B system selectors
Set each switch to the appropriate position depending on the system of the input signals fed to the INPUT A or B connector. When you change the setting of the switch, it may take a short time for the monitor to change the picture size, H phase, color temperature and convergence data.
HDTV-A: For the HDTV format input signal. If this position is selected, set the INPUT A/B H PHASE selector 4 to the position (5:3 or 16:9) which is appropriate.
If you select the position of 5:3 and input the original HDVS format signal, pedestal areas (black areas) appear on the right and left of the picture.
HDTV-B: Used to change the setting (picture size, H phase, color temperature and convergence) from HDTV-A. (Factory-setting is HDTV-A.)
PROG (progressive scan): For 525-line-non-interlaced signal (525 lines, 59.94 frames/sec., non-interlace). The aspect ratio is 4:3.

4 INPUT A/B H PHASE selectors
Set the switch to the appropriate position depending on the format of the input signal when the INPUT A/B system selector 3 is set to HDTV-A.
16:9: For the BTA/SMPTE (new) HDTV format
5:3: For the original HDTV format

5 INPUT A/B mode selectors
Set each switch to an appropriate position, GBR or YP_BP_R, depending on the mode of the input signals fed to the INPUT A or B connector. This switch is operative only when you set the INPUT A/B system selector 3 to HDTV-A or HDTV-B. When the switch is set to PROG, the GBR mode is selected regardless of the setting of this switch. The selected mode is indicated by the GBR or YP_BP_R lamp on the front panel.

JB board

TALLY switch
By setting this switch to ON, the tally lamp on the front panel lights when the power is on. When this switch is set to OFF, the tally lamp will not light.

1-3. Connection and Preparation at Installation

1-3-1. Selecting the Operating Voltage

The HDM-2830/2830E can operate on either 100-120 or 220-240V AC by selecting the operating voltage with the voltage selector. Before plugging in the unit, make sure that the voltage selector is set to the local power line voltage. Change the setting of the voltage selector, if necessary.

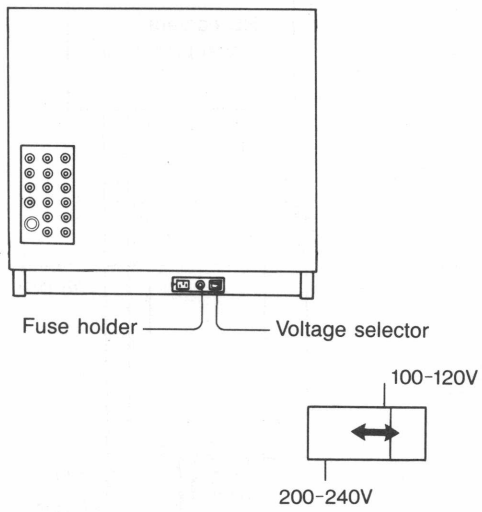

NOTICE
THIS NOTICE IS APPLICABLE FOR USA AND CANADA ONLY.
If shipped to USA, use the UL LISTED power cord specified below for 220-240 V operation.
If shipped to CANADA, use the CSA CERTIFIED power cord specified below for 220-240 V operation.

DO NOT USE ANY OTHER POWER CORD

Plug Cap	Tandem blade with ground pin. (NEMA 6-15P Configuration)
Cord	Type SVT or SJT, three 16 or 18 AWG Wires.
Length	Maximum 15 feet
Rating	Minimum 10A, 250V

Changing the fuse

The fuse initially installed is as follows:
- 6.3A/125V fuse for 100-120V AC
- T4A/250V fuse for 220-250V AC

If you change the setting of the voltage selector, be sure to replace the fuse with the appropriate one.

1-3-2. Connection Example

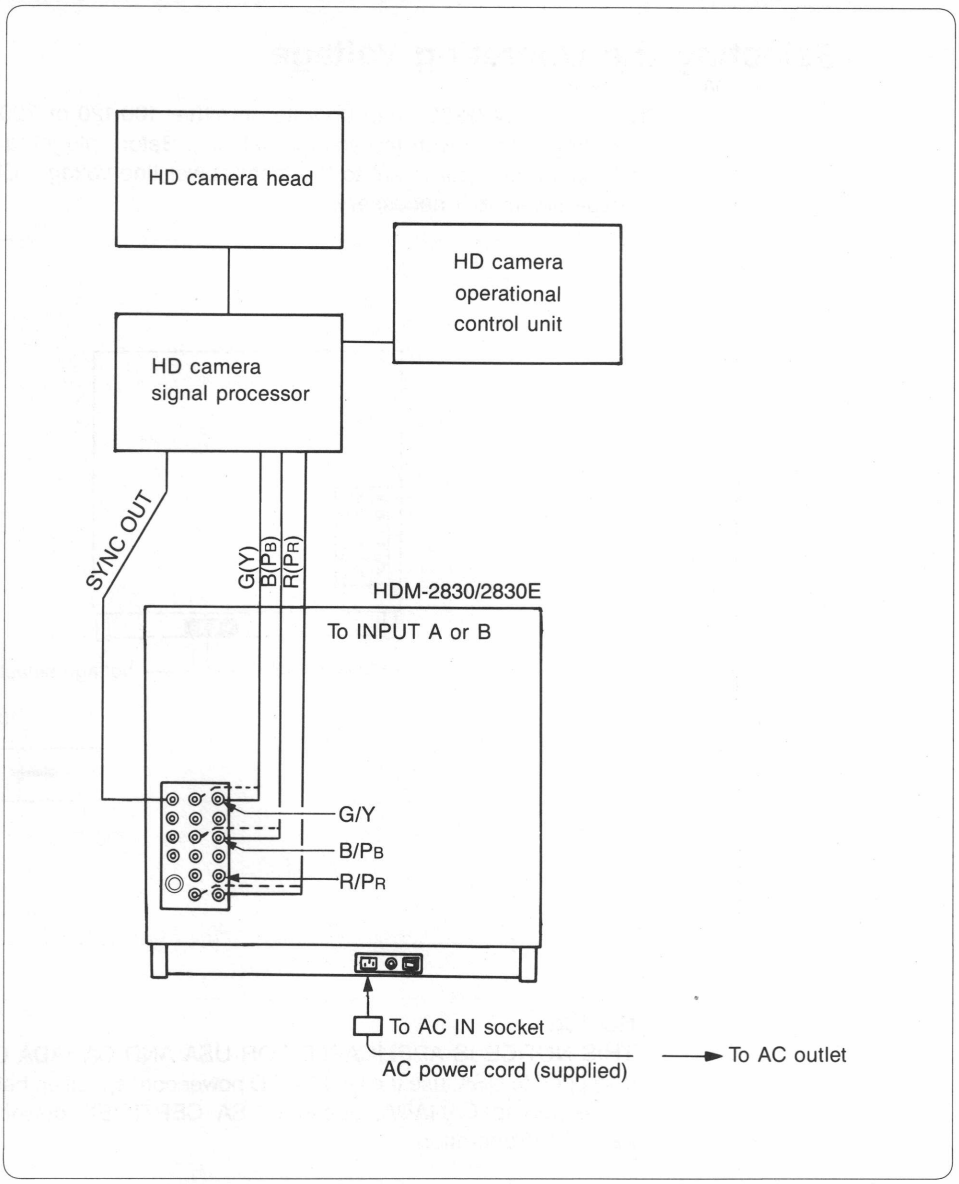

1-3-3. Correcting Beam Landing

Correct the beam landing (purity) with the controls on the W board if there is mislanding caused by terrestrial magnetism. For correction, do the direction (coarse) adjustment first, and if color impurity still remains, go on to the fine adjustment.

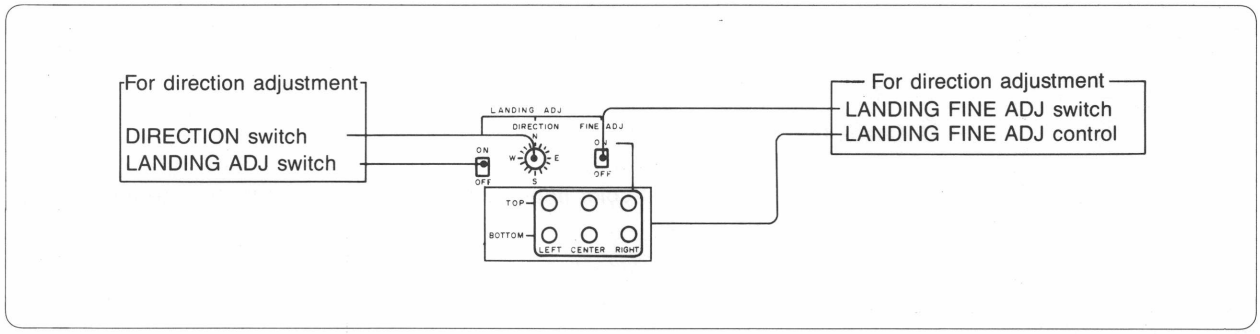

Direction adjustment

1 Monitor the flat field signal (the internal test signal* or the input signal) and allow the unit for more than 30 minutes to start adjustment.

2 Set the LANDING ADJ switch to ON.

Set the LANDING FINE ADJ switch to OFF.

3 Press the DEGAUSS switch on the front panel.

4 First, use a compass to determine which direction the picture tube faces. Then, turn the DIRECTION switch and set the arrow-head to the same direction indication.

Example When the picture tube faces south-east

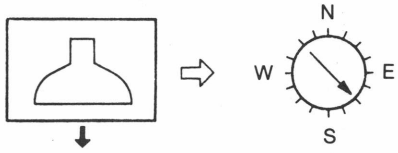

South-East

If you do not have a compass to check the direction, monitor the flat field signal and turn the DIRECTION switch for the best purity in white.

---

* **To monitor an internal test signal**
Press the INPUT/TEST key in the color temperature select mode. For details, refer to "1-5-5. Checking the Unit with the Internal Test Signals".

5 Press the DEGAUSS switch** again.

↓

6 Check the purity.

If color impurity still remains, go on to the fine adjustment.

Fine adjustment

1 Set the LANDING FINE ADJ switch to ON.

↓

2 Turn the LANDING FINE ADJ controls to make the white signal as bright as possible in each area of the screen.

The indications of the controls correspond to the portion of the screen. Use the controls in the following order.

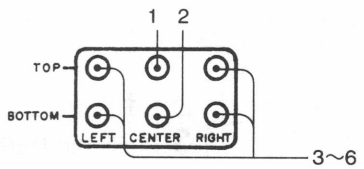

↓

3 Press the DEGAUSS switch**

↓

4 If any errors still exist, please repeat steps 2 to 5 to correct the beam landing.

** Wait for more than 5 minutes before pressing the DEGAUSS switch again. The switch does not function after while once it has been pressed.

1-4. Setting Switches according to the Input Signals

You can monitor the input signals fed to either the INPUT A or INPUT B connectors. Select which one to monitor with the INPUT selector on the front panel. According to the format of the input signals, set the switches on the JA board as follows.

Switch settings for input signal A

Signal format	Front panel	JA board (1-18 page)		
	INPUT selector	INPUT A system selector	INPUT A H PHASE selector	INPUT A mode selector
BTA/SMPTE standard HDTV signal (GBR)	A	HDTV-A	16:9	GBR
BTA/SMPTE standard HDTV signal ($Y/P_B/P_R$)				$Y/P_B/P_R$
Original format HDTV signal (GBR)			5:3	———
BTA/SMPTE standard HDTV signal (GBR)		HDTV-B	———	GBR
BTA/SMPTE standard HDTV signal ($Y/P_B/P_R$)				$Y/P_B/P_R$
525 lines non-interlace signal (GBR)		PROG	———	———

Do the same for input B signal using the switches for input B signal.

1-5. Adjustment

1-5-1. Selecting Adjustment Modes

Select the appropriate adjustment mode:

Color temperature select mode: To select the factory preset color temperature or color temperature which you have adjusted

Color temperature adjustment mode: To adjust the color temperature

Convergence adjustment mode: To adjust the convergence

Internal test signal generator mode: To monitor the internal test signals used to check the unit's condition

When you turn on the unit, the unit is set in the color temperature select mode. Mode selection is performed by the N board of the sub-control panel.

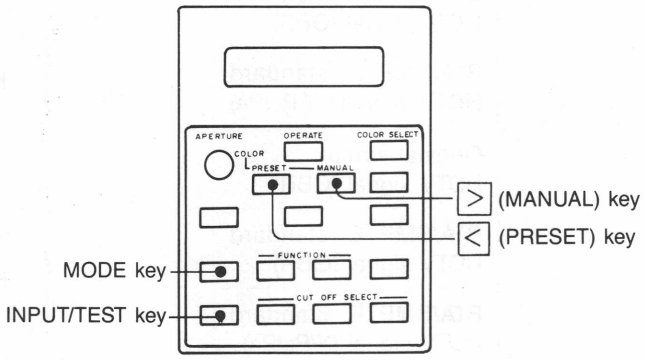

To change the mode

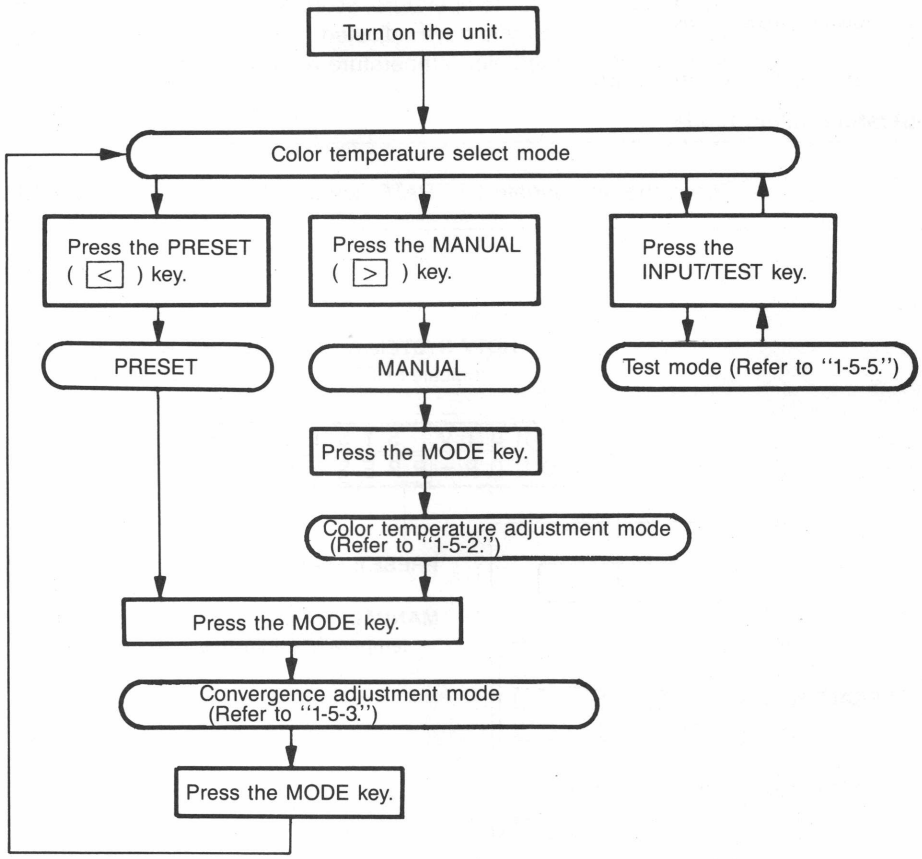

Storing and recalling the adjusted data

- Press the MODE key after adjusting the data in any mode. The new data is stored in the memory.
- Memories are backed up by battery and hold the data after the power is turned off.
- The unit has memories for the color temperature data which you have adjusted for each system separately, as well as a memory for the preset color temperature common to all the systems.
  The unit has memories for the convergence data which you have adjusted for each system separately, and for normal scanning mode and under scanning mode separately.
- It may take a little time to recall the data from the memories of a system when you change the setting of the INPUT A or B system selector on the JA board.
- The time may be longer when you change the setting in under scanning mode.

1-5-2. Adjusting Color Temperature

When the power is turned on, the unit is set in the color temperature select mode. To use the preset color temperature, select PRESET in this mode. To use the color temperature which you have adjusted, select MANUAL. If necessary, adjust the color temperature in the color temperature adjustment mode.

Color temperature select mode

Press the appropriate OPERATE key to select PRESET or MANUAL.

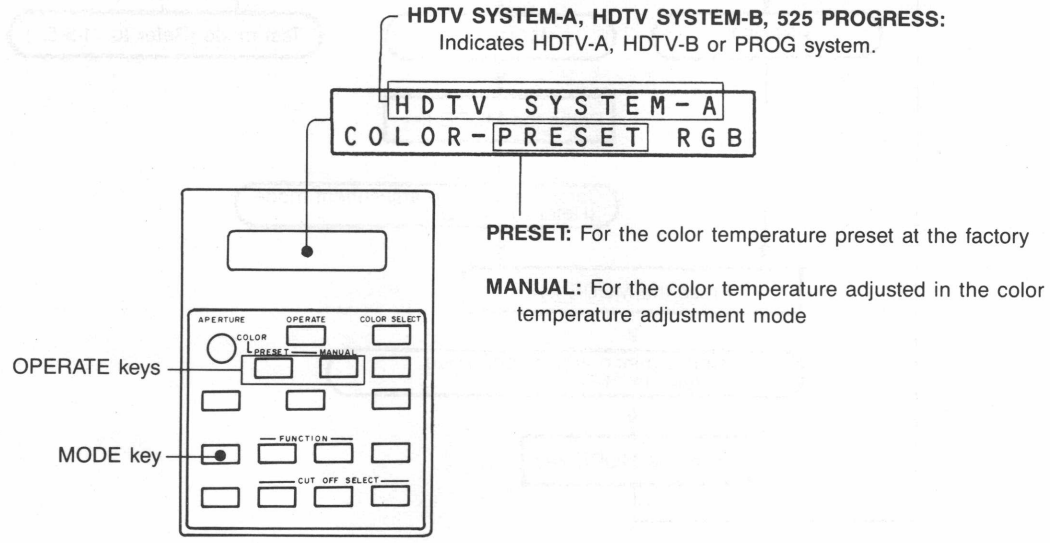

Color temperature adjustment mode

Press the MODE key after selecting MANUAL in the color temperature select mode to select the color temperature adjustment mode. In this mode, adjust the color temperature with bias 1 (black balance), gain (white balance), and bias 2.

Notes

- Allow the unit for more than 30 minutes to start adjusting the color temperature after you turn on the unit.
- Adjust the color temperature with the contrast and brightness set to their preset levels.
- In the color temperature adjustment mode, the BRIGHTNESS MANUAL control on the front panel does not function. The control will become operative again when you press the MODE key after adjusting the color temperature.
- Use a color analyzer for more precise adjustment.

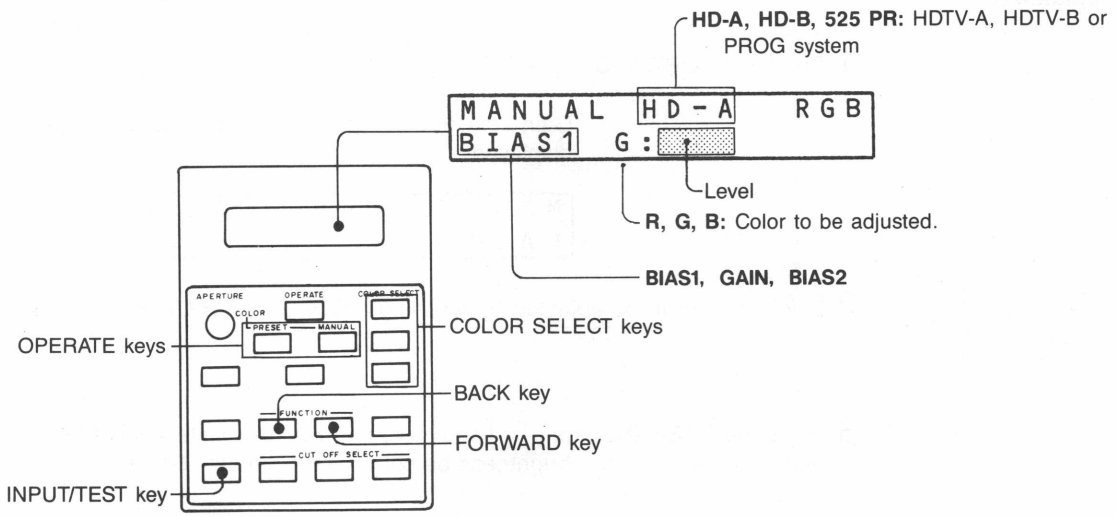

Bias 1 adjustment

1 Select the color temperature adjustment mode.

Bias 1 adjustment is possible. 0% setup signal will be displayed.

```
MANUAL  HD-A    RGB
BIAS1   G:
```

2 Select a color to be adjusted by pressing a COLOR SELECT key.

3 Press the OPERATE keys ([<] and [>] *) to adjust the black level of the color. It is recommended that the brightness be set to approximately 0.5 nit.

Gain adjustment

1 Press the FORWARD key after bias adjustment.

Gain adjustment is possible. 100% flat field signal will be displayed.

```
MANUAL  HD-A    RGB
GAIN    G:
```

2 Select a color to be adjusted by pressing a COLOR SELECT key.

3 Press the OPERATE keys ([<] and [>]) to adjust the white level of the color. It is recommended that the brightness be set to approximately 60 nit.

---

* Holding down [<] or [>] adjusts the data consecutively and pressing it adjusts the data step by step.

Bias 2 adjustment

1 Press the FORWARD key after gain adjustment.

Bias 2 adjustment is possible. 0% setup signal will be displayed.

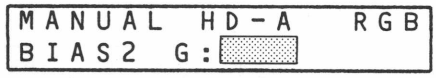

2 Select the color to be adjusted by pressing a COLOR SELECT key.

3 Press the OPERATE keys ([<] and [>]) to adjust the black level of the color. It is recommended that the brightness be set to approximately 0.5 nit.

Checking color temperature

After bias 2 adjustment, press the INPUT/TEST key to display the gray scale signal and check the color temperature by monitoring the signal. If the color temperature is still not properly adjusted, repeat the gain and bias 2 adjustments and check the temperature again. Check the color temperature in modes other than the bias 1 and gain adjustment modes because the beam detector is deactivated in these modes.

Changing the signals

Besides using the setup and flat field signals, you can use gray scale signal or other input signals for color temperature adjustment. To use these signals, press the INPUT/TEST key in the color temperature adjustment mode. The signal will change as follows: Setup / flat field→gray scale→Input signal→Setup / flat field.

Copying the color temperature data

You can copy the adjusted color temperature data from one system to another. The R, G and B data, also the data on bias 1, gain and bias 2 are copied altogether.

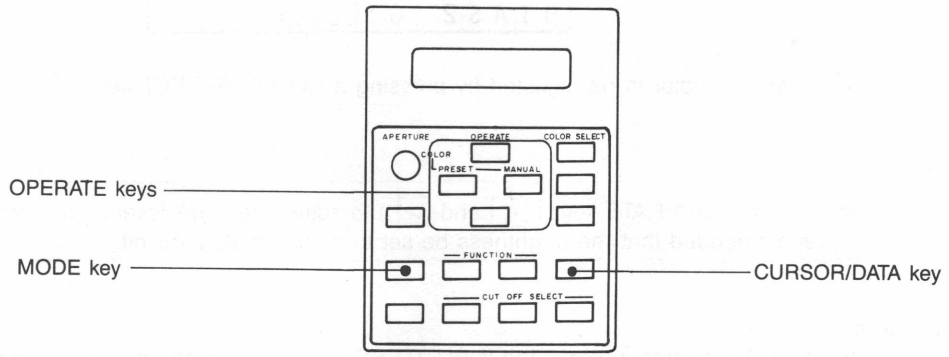

1 Select the color temperature select mode and select MANUAL by pressing the OPERATE key ([>]).

```
  HDTV SYSTEM-A
COLOR-MANUAL  RGB
```

2 Selecting the destination
Set the INPUT A or B system selector to the system to which you want to copy the color temperature data.

Use the system select switch corresponding to the front panel selection of A/B input.

3 Press the MODE key to select the color temperature adjustment mode.

```
MANUAL  HD-A    RGB
BIAS1  G:▒▒▒▒
```

4 Press the OPERATE keys ([∧] and [∨]) at the same time to set the unit in the copy mode.

The LCD will show the source system, and also the destination system selected in step 2.

[Example] When the data is copied from the HDTV-B system to the HDTV-A system.

```
MANUAL  DATA  COPY
 HDTV-B→ HDTV-A
```

Source system — Destination system selected in Step 2.

5 Changing the source system

Hold down the OPERATE key ([<] or [>]) to change the source system. If this is not necessary, skip this step.

The table below shows the source systems which correspond to the selected destination systems.

Destination	Source	
	[<]	[>]
HDTV-A	PROG.	HDTV-B
HDTV-B	PROG.	HDTV-A
PROG.	HDTV-B	HDTV-A

When you change the source system, the LCD will show the following message. (This example shows that [<] was pressed in the example in step 4.)

```
PUSH CURSOR/DATA
 PROG.    → HDTV-A
```

6 Copying the data

Hold the CURSOR/DATA key down while pressing the same OPERATE key ([<] or [>]) as the one you pressed in step 5. If you skipped step 5, hold the CURSOR/DATA key down while pressing the OPERATE key indicating the source system in the table in step 5. (For example, press [>] to copy the data without changing the source system shown in the example in step 4.)

Hold the keys down until the the message on the LCD changes as follows.

```
  COPYING DATA
HDTV-B→ HDTV-A
```

⇩

```
  COPY COMPLETE
HDTV-B→ HDTV-A
```

7 Canceling the copy mode

Press the MODE key to return to the color temperature adjustment mode.

The LCD shows the following message.

```
MANUAL  HD-A    RGB
BIAS1  G:▒▒▒▒
```

1-5-3. Adjusting Convergence

In the convergence adjustment mode, adjust it with the coarse and fine adjustments. Adjust the convergence for each system (HDTV-A, HDTV-B, PROG, UNDERSCAN HDTV-A, UNDERSCAN HDTV-B, UNDERSCAN PROG).
The memories for the convergence data are composed of twelve memories.

	HDTV-A	HDTV-B	PROG
Normal scan	COARSE (No.1—13) COARSE (No.14—25) & FINE	COARSE (No.1—13) COARSE (No.14—25) & FINE	COARSE (No.1—13) COARSE (No.14—25) & FINE
Under scan	COARSE (No.1—13) COARSE (No.14—25) & FINE	COARSE (No.1—13) COARSE (No.14—25) & FINE	COARSE (No.1—13) COARSE (No.14—25) & FINE

To adjust the convergence data initially, reset the COARSE data in the system before adjustment. For resetting the data, refer to ''1-5-4. Resetting the Adjustment Data''.
After COARSE adjustment, perform FINE adjustment.

Note

Before you perform COARSE adjustment, always reset the FINE data. If you don't reset the data, COARSE adjustment may not be possible.

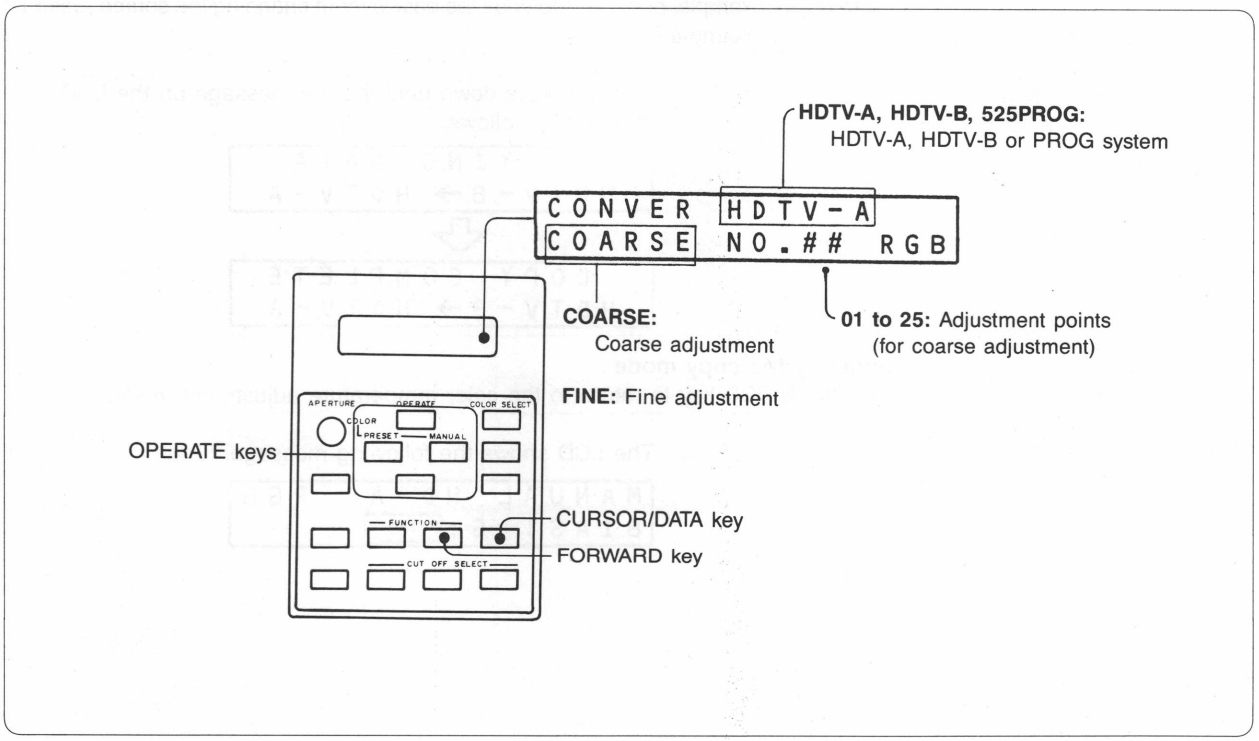

1 Select the convergence adjustment mode.

Coarse adjustment is possible in this mode.

```
CONVER  HDTV-A
COARSE  NO.01  RGB
```

The crosshatch pattern is displayed.

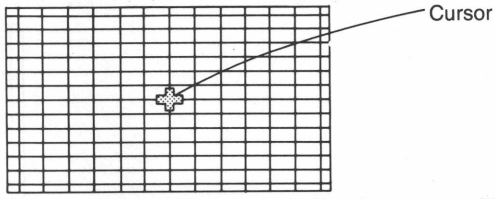

2 Press the appropriate OPERATE keys to adjust the convergence where the cursor is.

The red line moves in the same direction as it is indicated on the arrow key while the blue line moves in the opposite direction. Adjust the convergence so that both the red and blue lines converge on the green line.

3 Press the CURSOR/DATA key to move the cursor to the next adjustment point.

There are twenty-five adjustment points. Every time the key is pressed, the cursor moves to the next point in the following order. While the key is held down, the cursor moves in the opposite order.

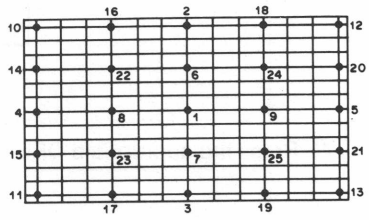

To adjust accurately

Repeat steps 2 and 3 to adjust the convergence in each position.

Fine adjustment

1 Press the FORWARD key in the convergence adjustment mode.

Fine adjustment is possible.

```
CONVER  HDTV-A
 FINE  CURSOR  RGB
```

The cursor blinks at the center of the crosshatch pattern.

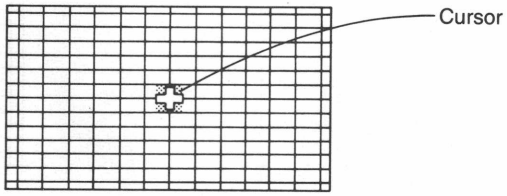

2 Press the OPERATE key to move the cursor to a point to adjust.

The cursor can be moved to every crosspoint.

3 Press the CURSOR/DATA key.

The cursor stops blinking and the LCD shows the following message.

```
CONVER  HDTV-A
 FINE   DATA   RGB
```

4 Press the appropriate OPERATE keys to adjust the convergence where the cursor is.

5 Press the CURSOR/DATA key again.

The cursor starts blinking again. Repeat steps 2 to 5 to adjust the convergence at each crosspoint.

Note

When the cursor starts blinking during convergence adjustment, the end of the memory has been reached. If you need more precise adjustment, see the convergence adjustment in Section 4.

1-5-4. Resetting the Adjustment Data

You can reset the color temperature and convergence data, as follows.

Data Type	Data after resetting	Notes
Color temperature	Preset data	The data on R, G and B, and the data on bias 1, gain and bias 2 are set to the preset level.
Convergence	The center position within adjustable range	All data (COARSE No.1—25 and FINE) is reset in COARSE adjustment mode.

Selecting the data to reset

The color temperature data can be reset in each system (HDTV-A, HDTV-B, PROG) independently, and the convergence data can be reset in each system (HDTV-A, HDTV-B, PROG, UNDERSCAN HDTV-A, UNDERSCAN HDTV-B, UNDERSCAN PROG).
Select the system by setting the INPUT A or B system selector and select each adjustment mode before resetting the data. (The LCD must show the following message.)

Data	Mode	LCD
Color temperature	Color temperature adjustment mode	MANUAL HD-A RGB BIAS1 G: BIAS 1, GAIN or BIAS 2 ↑ ↑ RGB
Convergence coarse adjustment data	Convergence adjustment mode (Coarse adjustment)	CONVER HDTV-A COARSE NO.## RGB 1~25
Convergence fine adjustment data	Convergence adjustment mode (Fine adjustment)	Press the CURSOR/DATA key to stop the cursor blinking. CONVER HDTV-A FINE DATA RGB

Note
When you reset the convergence data in Fine adjustment mode, COARSE No.14—No.25 and Fine data is reset.

Resetting the data

1 Hold down both OPERATE keys ([<] and [>]).

The LCD shows the following message.

```
   RESET  OK?
Keep  <  >  pushing
```

2 Hold down the keys for a second unitl the following message appears.

```
   RESET
      COMPLETE
```

The data is now reset.

To stop the operation before the data is reset, release the OPERATE keys before the above message appears.

1-5-5. Checking the Unit with the Internal Test Signals

The unit has a test signal generator which generates seven test signals. You can display the test signals in the test mode to check the monitor. Press the INPUT/TEST key in the color temperature select mode to select the test mode.

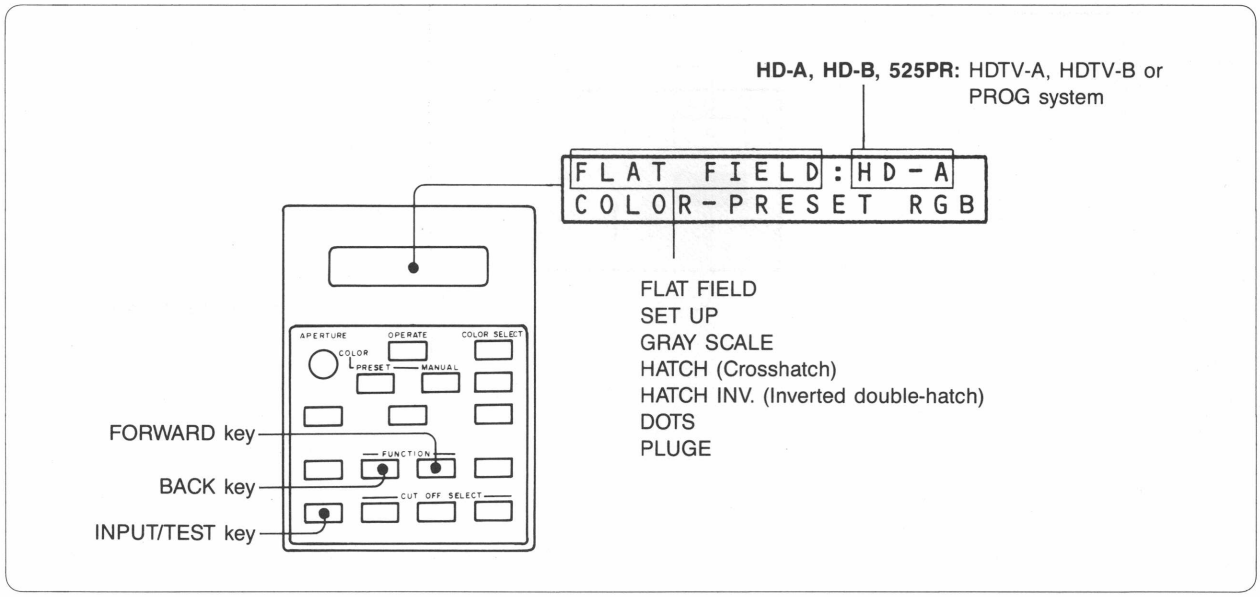

Every time you press the FORWARD key, the pattern changes in the order shown below. Pressing the BACK key changes the signal in the reverse order.

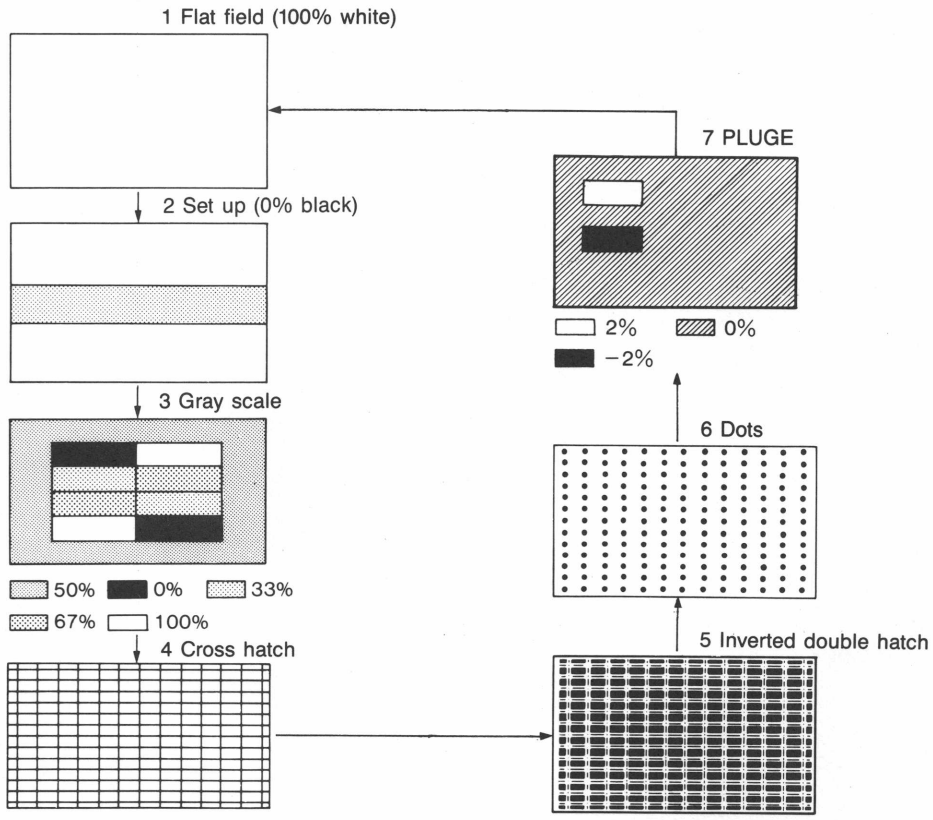

Adjusting the brightness using the PLUGE signal

To adjust the brightness with the BRIGHTNESS MANUAL control on the front panel depending on the ambient light, use the PLUGE signal and adjust as follows.

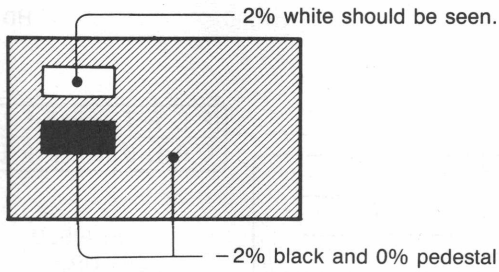

1-6. Specifications

	System	1125 lines, 60 fields/sec, interlaced 1 HDTV studio standard (BTA/SMPTE standard) 2 Original HDTV standard (only the RGB input) 525 lines, 59.94 frames/sec., non-interlaced
	CRT	Super Fine Pitch Trinitron 0.35 mm phosphor trio pitch, 90° deflection, 36.5 ϕ in-line gun Effective picture size: 344.8 × 620 mm (h/w) (13 5/8 × 24 1/2 inches) 711.4 mm (28 inches) measured diagonally

Input connectors and signals

Connectors

	G/Y, B/P_B, R/P_R	BNC (2), 75 ohms or high impedance (with loop-through output)
	EXT SYNC	BNC (2), 75 ohms or high impedance (with loop-through output)
	HD, VD	BNC (1), 75 ohms
	Remote control	10-pin

Video signals

	HDTV	GBR: Composite, 1.0 Vp-p or non-composite, 0.7 Vp-p Sync signal is ±0.3 Vp-p ±6 dB tri-level bipolar sync or 0.3V ±6 dB sync, negative. Y/P_B/P_R: Composite, 1.0 Vp-p or non-composite, 0.7 Vp-p P_B and P_R is ±0.3 Vp-p, and the sync signal is ±0.3V ±6 dB tri-level bipolar sync.
	525 lines, non-interlaced	R/G/B: Composite, 1.0 Vp-p or non-composite, 0.7 Vp-p Sync signal is 0.3 ±6 dB sync, negative.

Sync signal

	EXT SYNC	±0.3V±6 dB tri-level bipolar sync or 0.3V±6 dB sync, negative
	HD, VD	4 Vp-p±6 dB sync, negative

Video signal

Frequency response	60 Hz to 30 MHz $^{+0.5}_{-3}$ dB (from video input to RGB final stage when the APERTURE is OFF)
Waveform distortion	Overshoot: Less than 10% Sag: Less than 2% (at RGB final stage when a square wave (rise time: 0.01 μsec) is input)
Linearity	DG: Less than 5% (from video input to RGB final stage)
DC restoration	Clamp voltage regulation: Less than 1% of input video signal, 10% to 90% APL
Noise	Less than −55 dB (p-p/p-p) (RGB final stage, with video input terminated with 75-ohm)
Matrix error ($Y/P_B/P_R$)	Within 3%

Deflection and high voltage

Minimum sync level	Internal sync: −10 dB External sync: −10 dB
Deflection distortion	Within a central area bounded by a circle whose diameter equals the picture height, within 1% of the picture height (only in the HDTV system)
Picture size	Normal scan: 5% overscan Underscan: 3% underscan
Interlace	Within 55:45 (only in the HDTV system)
Retrace time	Horizontal: Less than 3.77 μsec. Vertical: Less than 6590 μsec.
Anode voltage	30 ± 0.2 kV
EHT load regulation	Less than 1%
Convergence	Center: Less than 0.5 mm Corners: Less than 0.8 mm
Luminance	20 Ft-L (When 100% white is input at the preset level)
Color temperature	

mode	Color temperature
PRESET	6500K + 8MPCD
MANUAL(HDTV-A)	6500K + 8MPCD
MANUAL(HDTV-B)	6500K + 8MPCD
MANUAL(PROG)	9300K + 8MPCD

Nominal chromaticity coordinates

	X	Y
R	0.630	0.340
G	0.310	0.595
B	0.155	0.070

Resolution

Center
Horizontal: More than 1000 TV lines
Vertical: More than 750 TV lines
Corners
Horizontal: More than 950 TV lines
Vertical: More than 700 TV lines

Environment

Operating temperature	0°C to 40°C (32°F to 104°F)
Optimum temperature range	20°C to 30°C (68°F to 86°F)
Operating humidity	10% to 85%
Storage temperature	−20°C to +60°C (−4°F to 140°F)
Altitude	Lower than approx. 3,050 m (10,000 feet)

Others

Warm up time	More than 30 minutes
Power requirements	90 to 132V or 198 to 264V AC selectable, 50/60 Hz
Power consumption	330W
Battery life for nonvolatile memory	More than five years
Weight	92 kg (202 lb 13 oz)
Dimensions	754 × 615 × 677 mm (w/h/d) (29 3/4 × 24 1/4 × 26 3/4 inches)
Supplied accessories	Fuse (2) (6.3A/125V or T4/A250V) Remote connector (1) Tally number plate (1) Drawer key (1) AC power cord (1) 75-ohm termination plug (4) Operation and maintenance manual (1) Screwdriver (1)
Optional accessory	VF-503 monitor hood

Design and specifications are subject to change without notice.

SECTION 2
EXTERNAL DIMENSIONAL DIAGRAM, FIXING METHOD, AND DISASSEMBLY

2-1. EXTERNAL DIMENSIONAL DIAGRAM AND FIXING METHOD

Dimensions

(Front side)

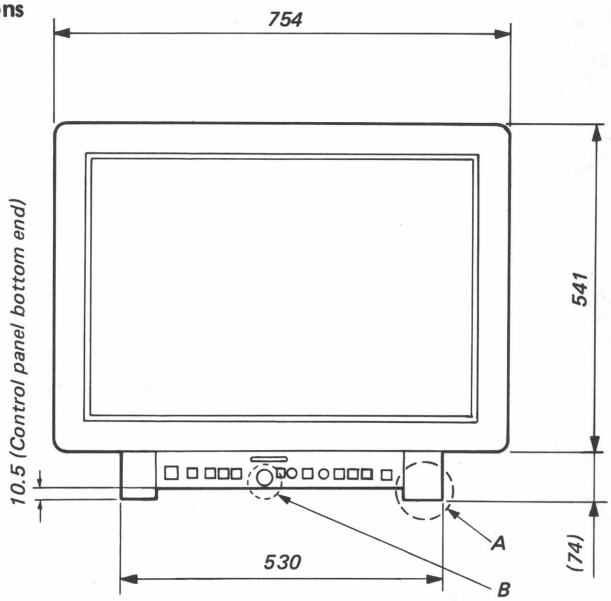

(Side)

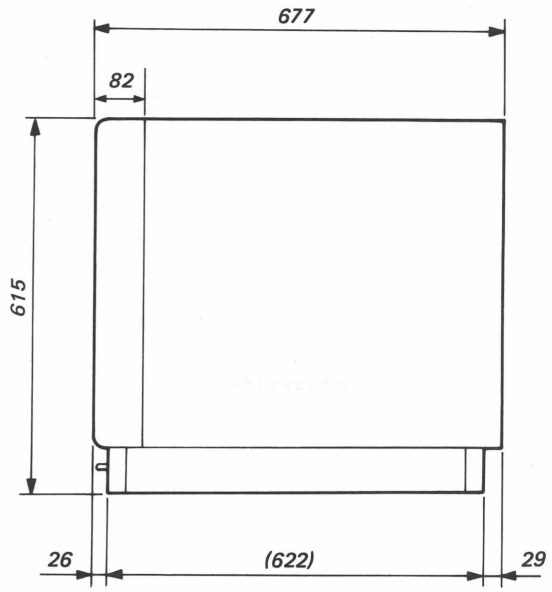

Detailed diagram of B section

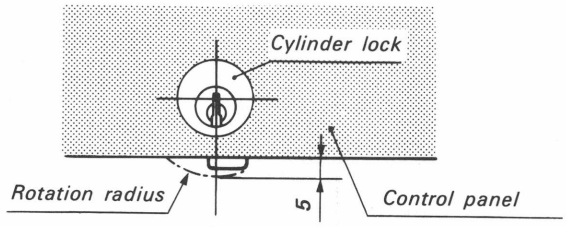

(Bottom side)

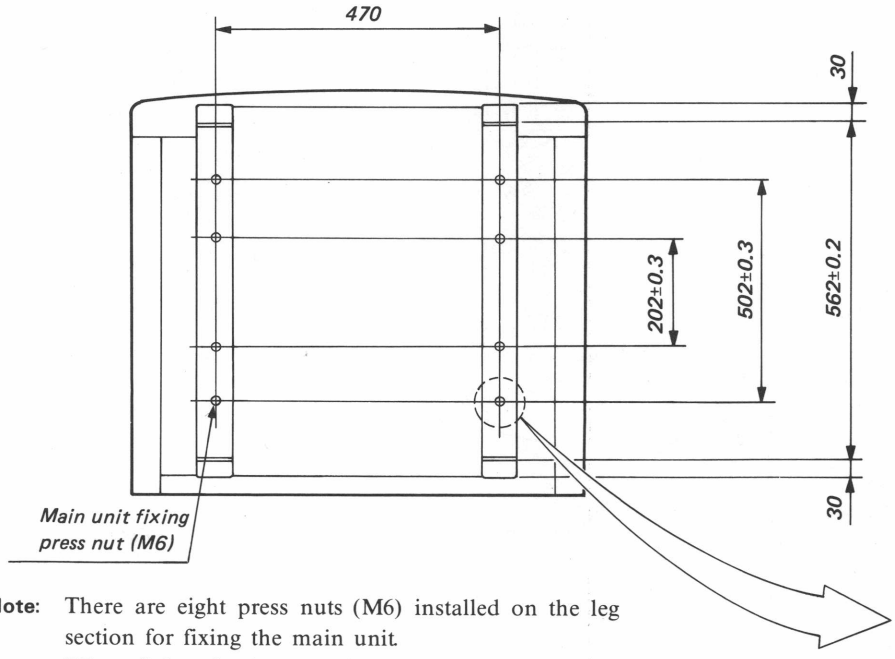

Fixing method

Main unit A section fixation detailed cross section

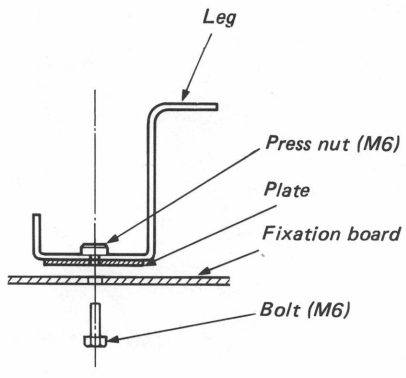

Note: There are eight press nuts (M6) installed on the leg section for fixing the main unit.
When fixing the leg, use the above mentioned bolts (M6).

2-2. REMOVAL OF THE CABINET

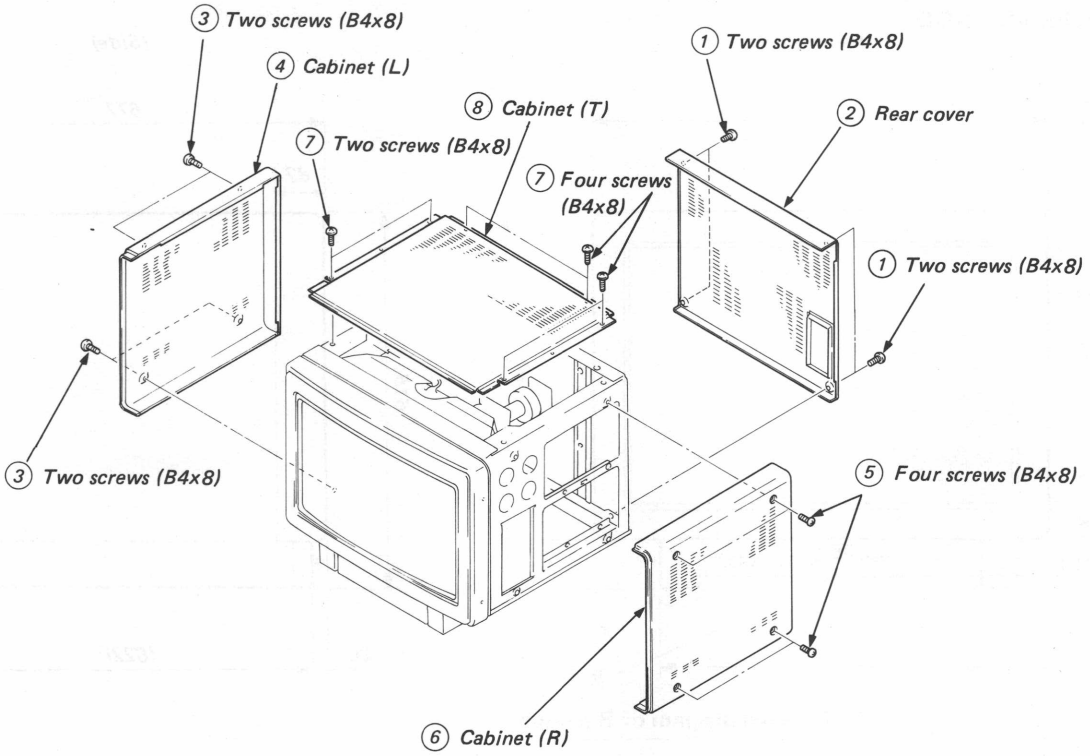

2-3. REMOVAL OF THE BEZEL ASSEMBLY

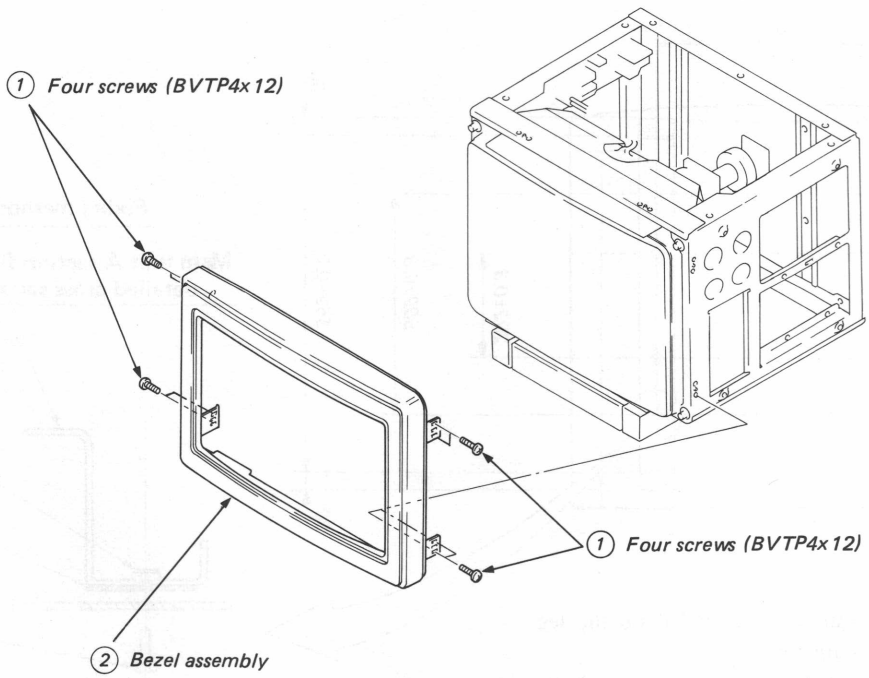

2-4. INSPECTION METHOD OF THE R BOARD

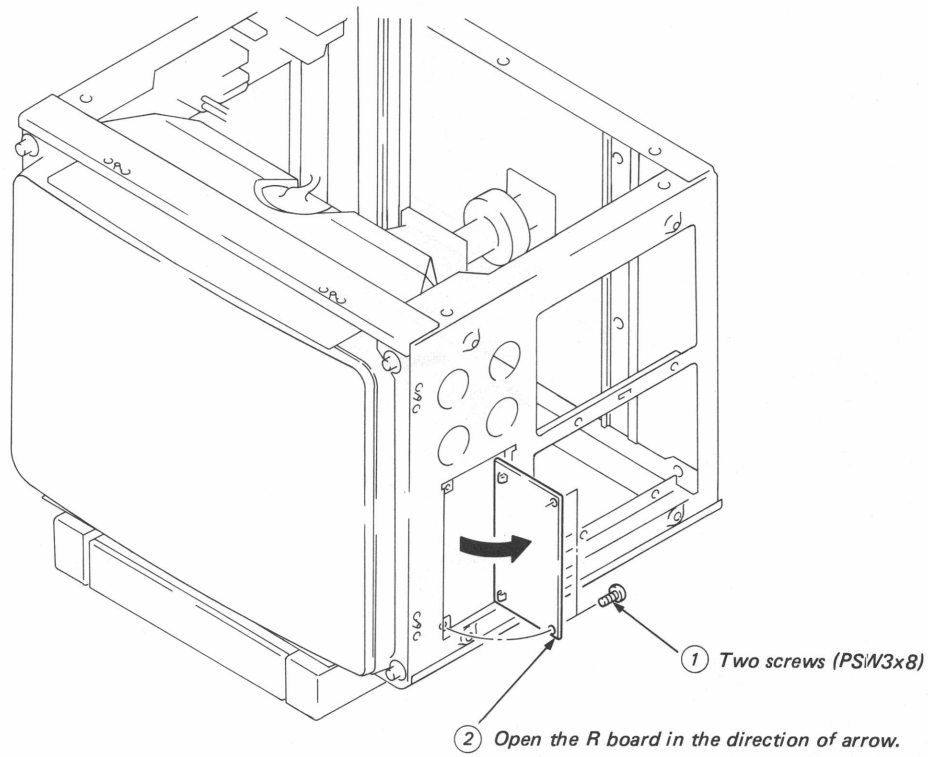

2-5. INSPECTION METHOD OF THE CA BOARD

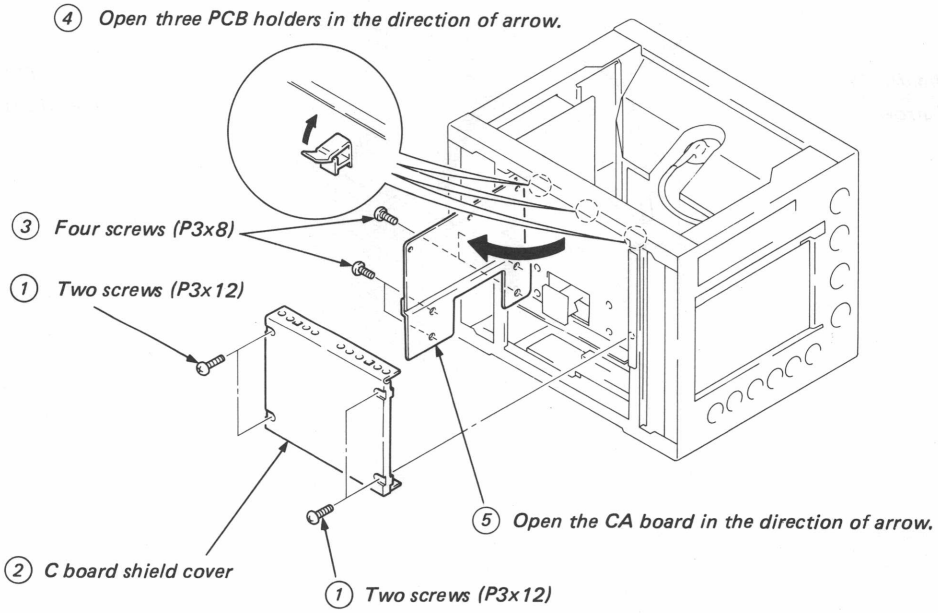

2-6. REMOVAL OF THE GA BOARD

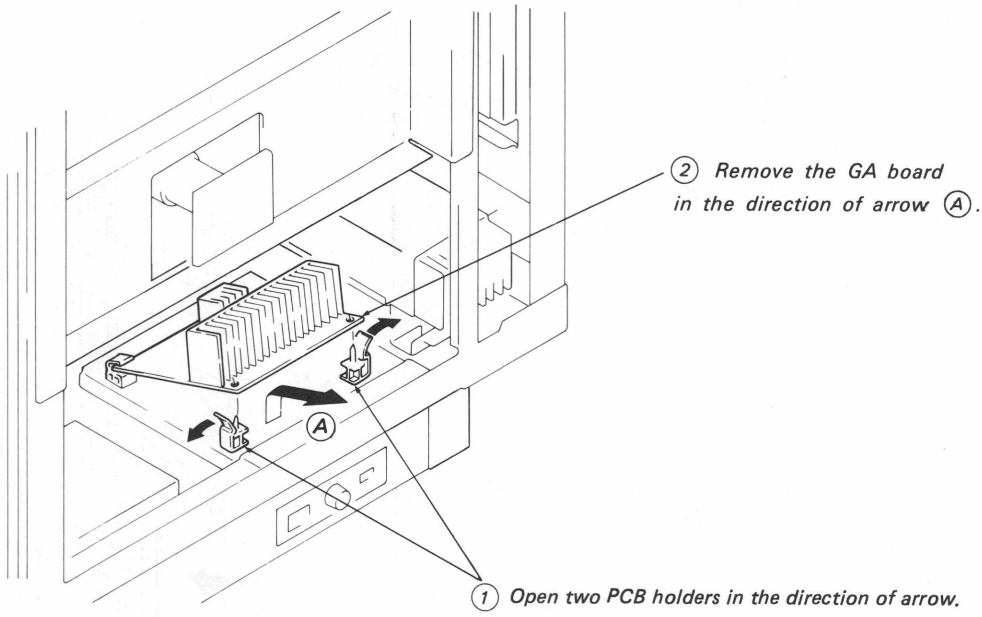

2-7. REMOVAL OF THE F BOARD

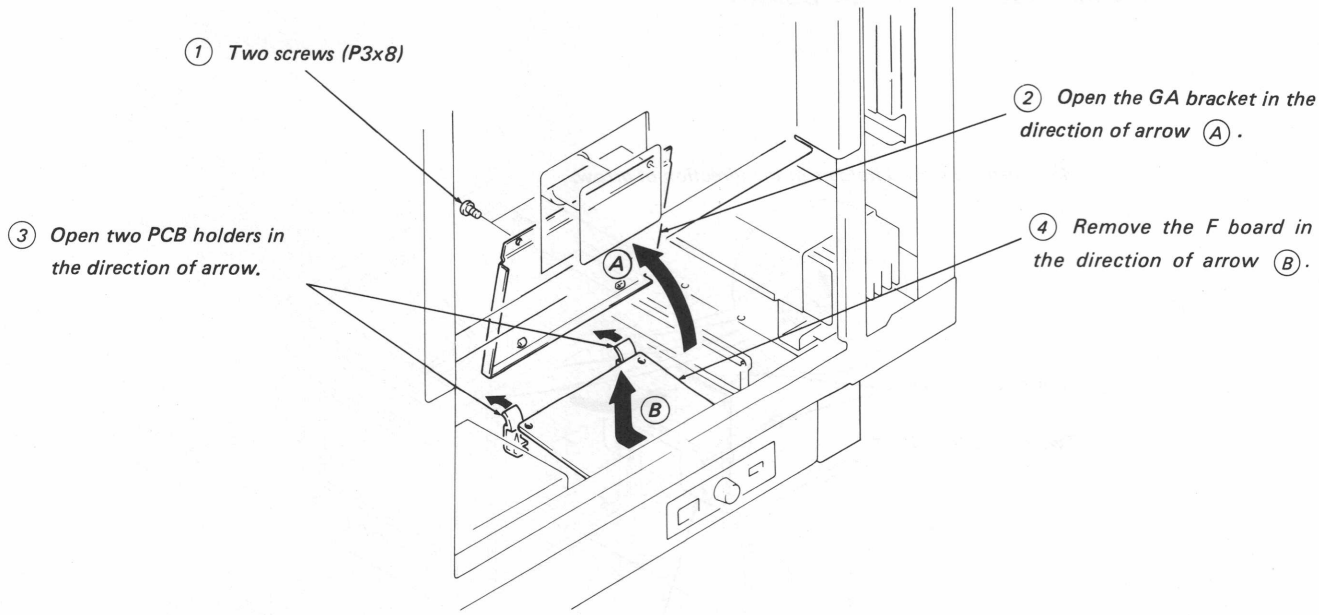

2-8. REMOVAL OF THE SWITCHING REGULATOR (CR-15EN)

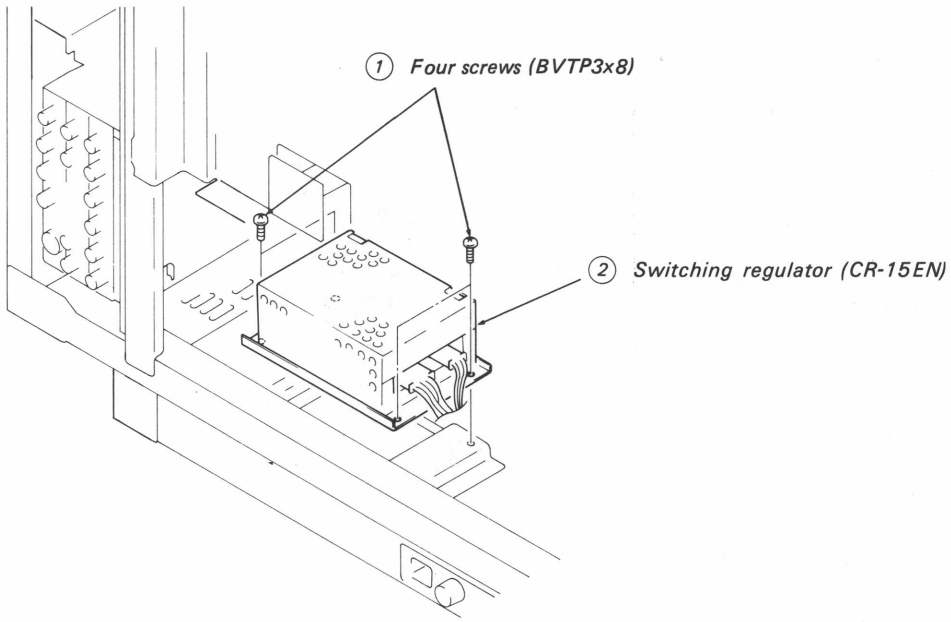

2-9. INSPECTION METHOD OF THE E BOARD

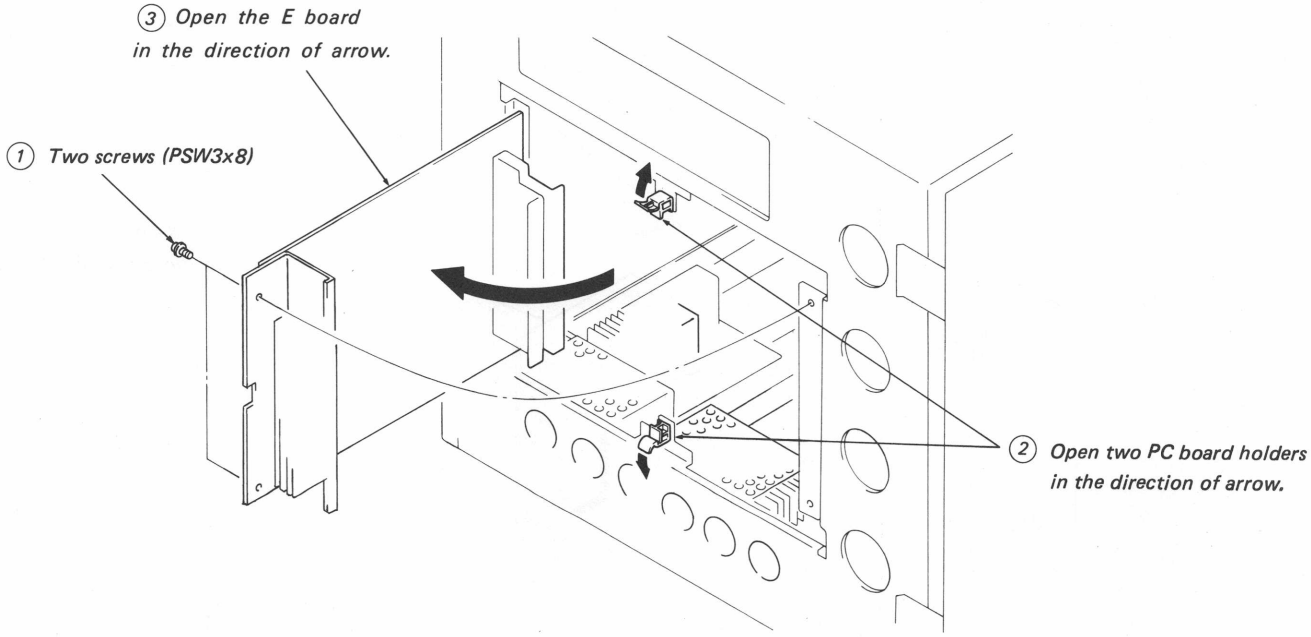

2-10. REMOVAL OF THE SWITCHING REGULATOR (SF-11)

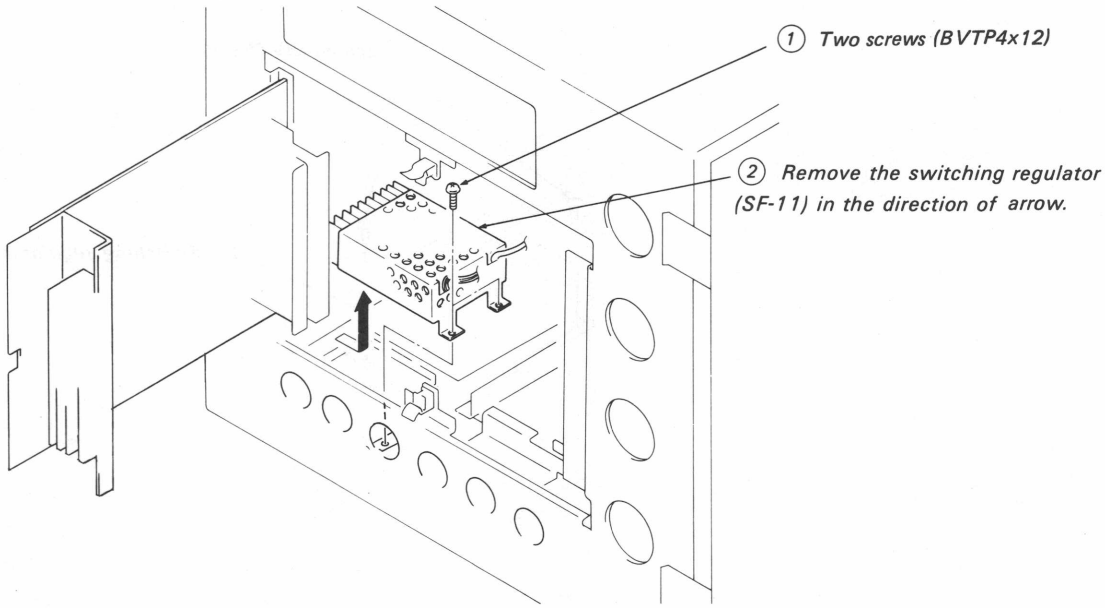

2-11. REMOVAL OF THE SWITCHING REGULATOR (TK-18)

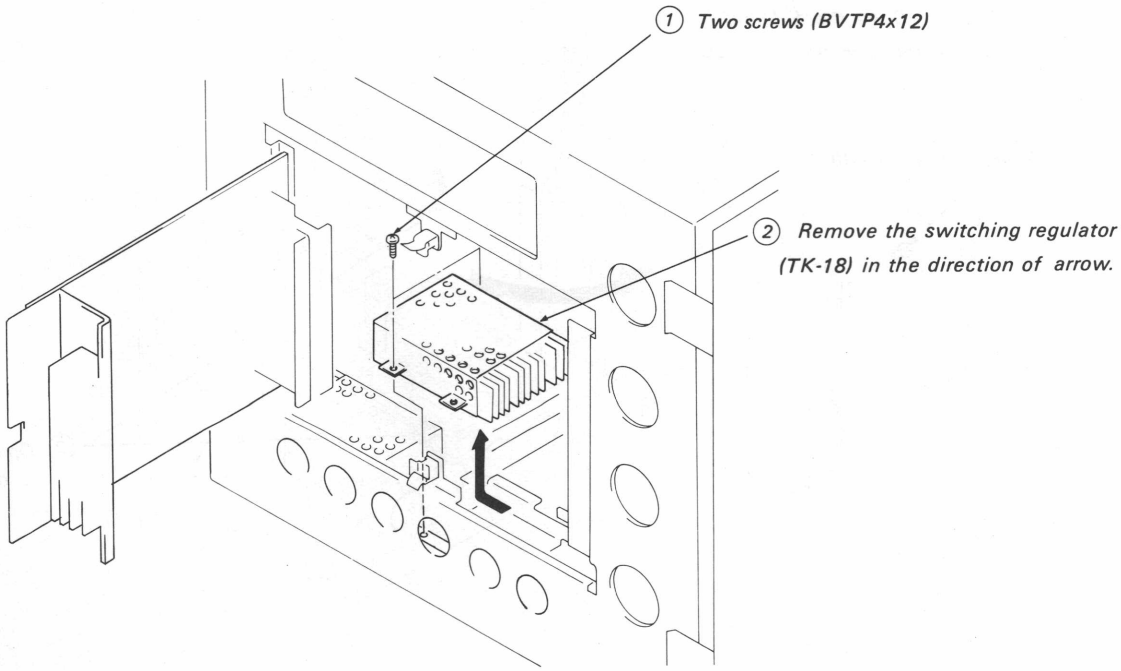

2-12. REMOVAL OF THE HOLDER (Z)

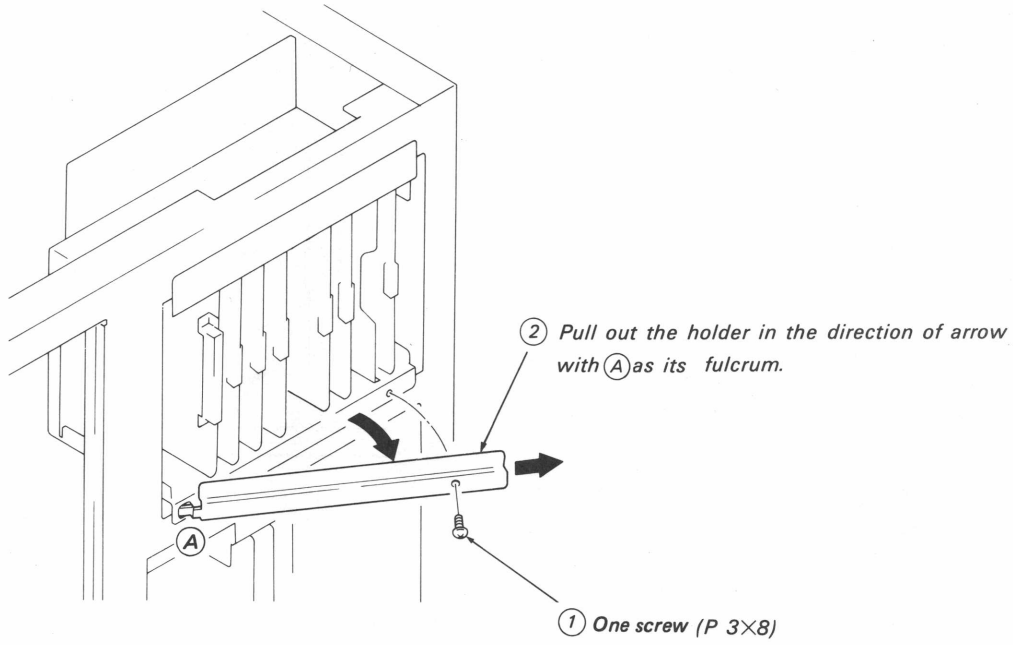

2-13. INSPECTION METHOD OF THE DC BOARD

Note: Boards DA, DB, ZA, ZC and ZD can similarly be inspected.

Note: When removing the cover of the ZD board during inspection, be careful so as not to short-circuit both ends of the battery.

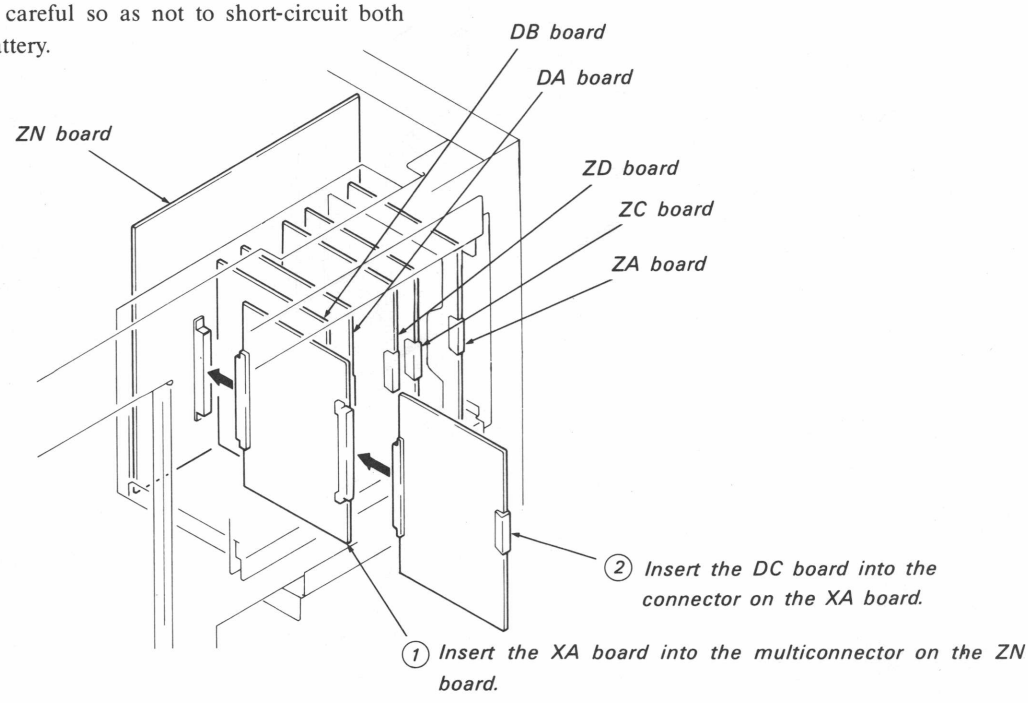

2-14. REMOVAL OF THE HOLDER (B)

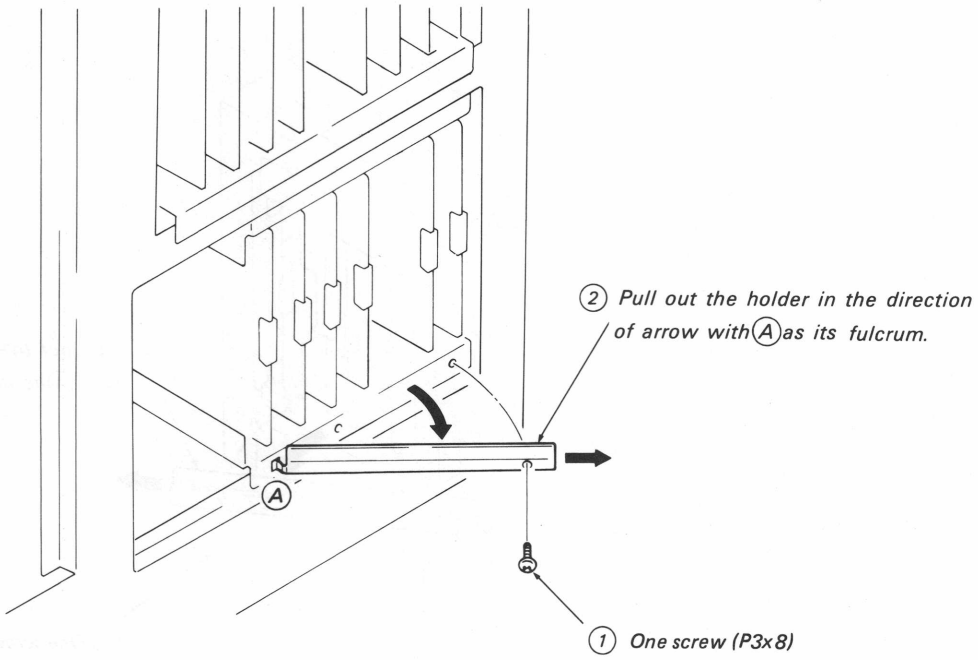

2-15. INSPECTION METHOD OF THE BG BOARD

Note: Boards BA, BB, BD, BE and BF can similarly be inspected.

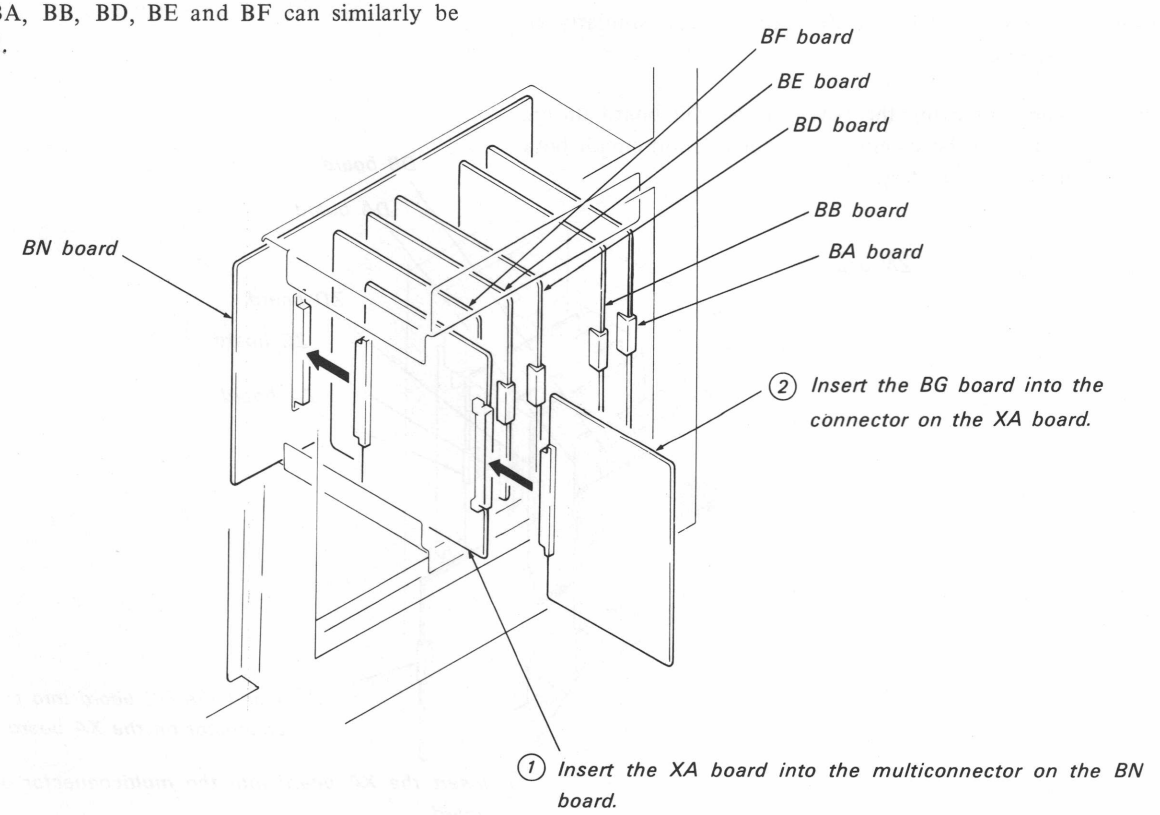

2-16. REMOVAL OF THE QC BOARD

Note: Boards QA and QB can similarly be removed

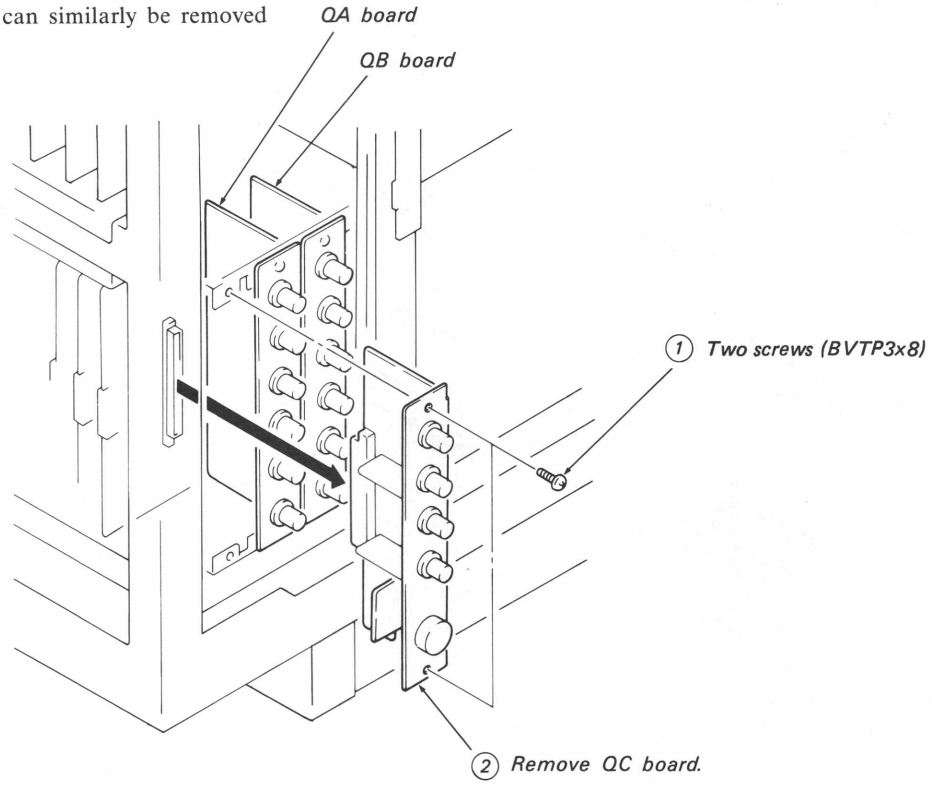

2-17. REMOVAL OF THE FLYBACK TRANSFORMER AND HV BLOCK

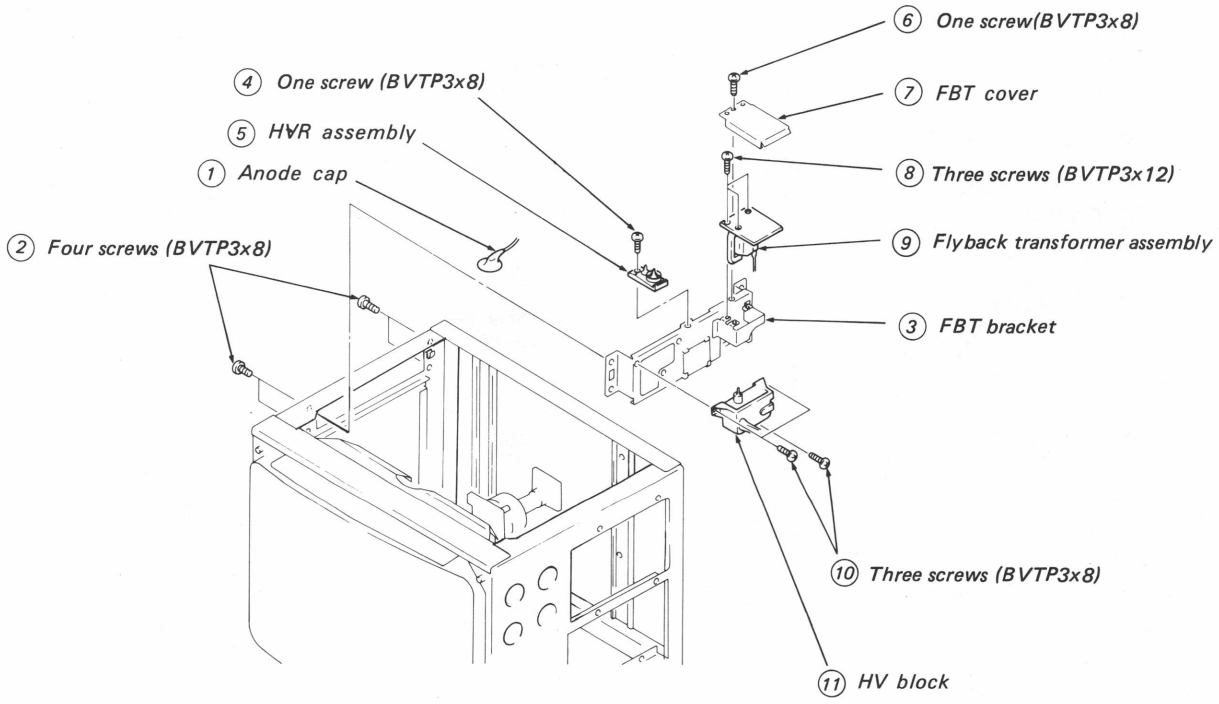

2-18. REMOVAL OF THE BOARD COVER (D) (SUB CONTROL PANEL)

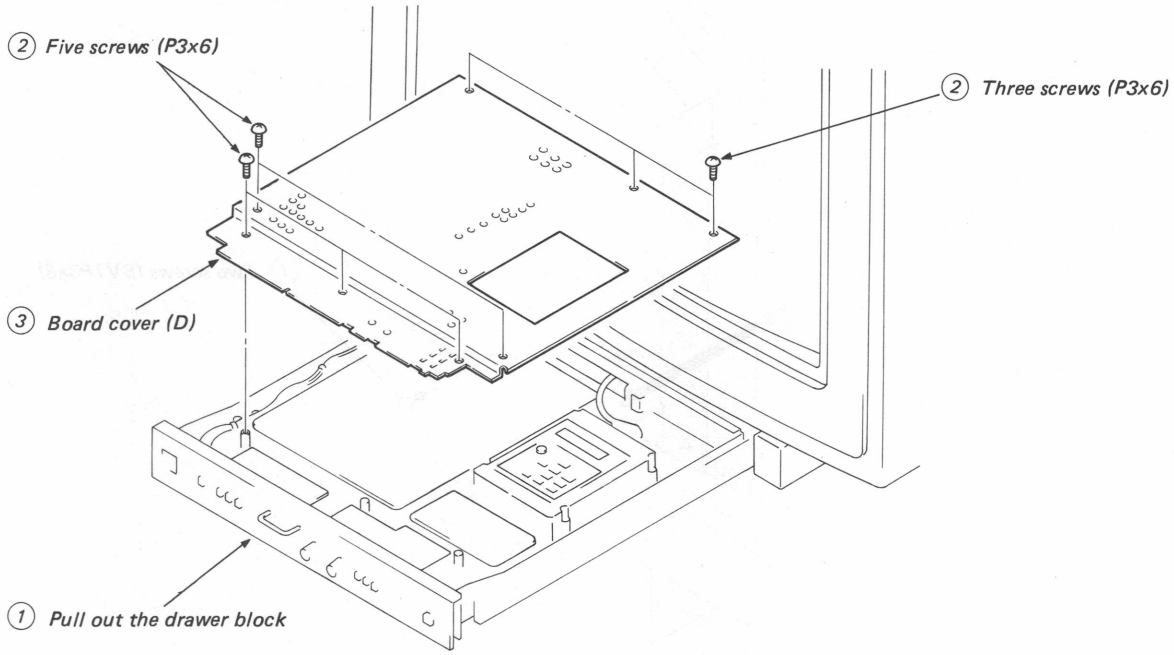

2-19. REMOVAL OF THE BOARDS D, JA, AND JB

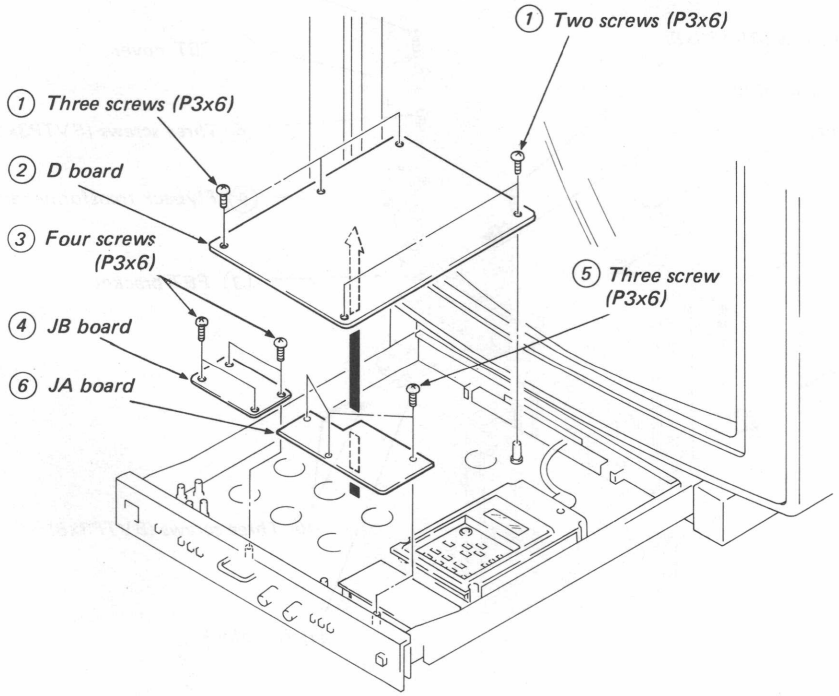

2-20. REMOVAL OF THE BOARDS W AND N

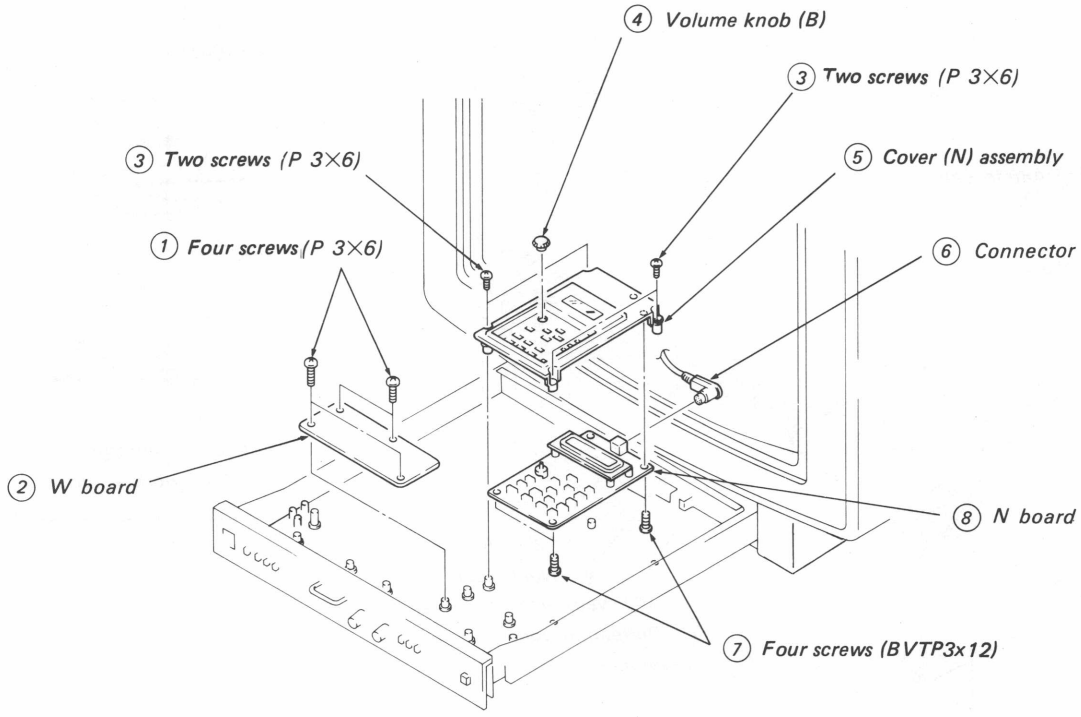

2-21. REMOVAL OF THE CONTROL PANEL ASSEMBLY

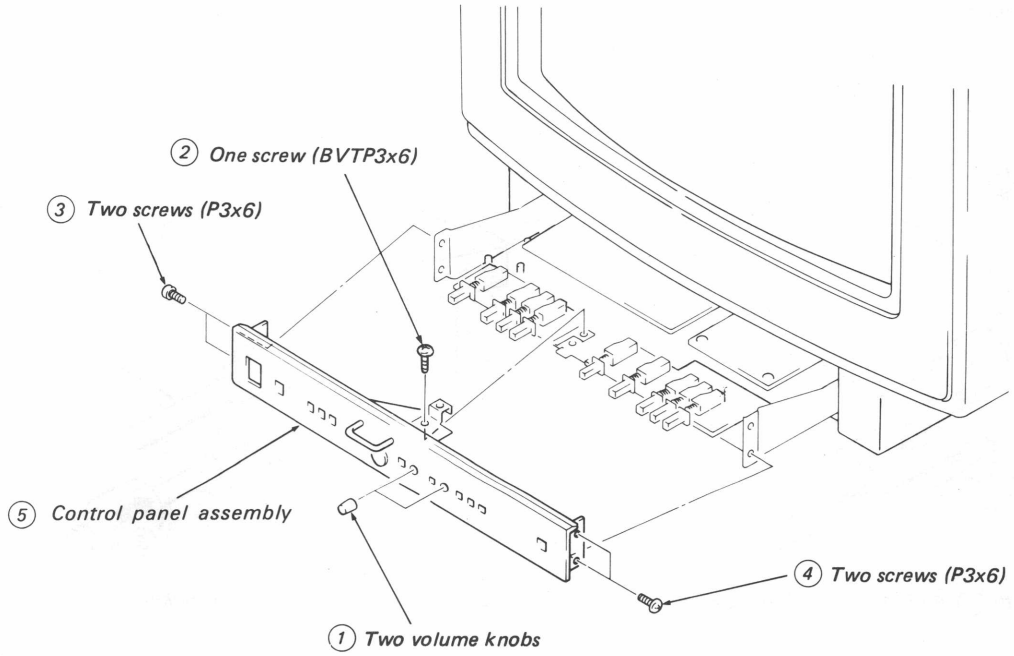

2-22. REMOVAL OF THE PICTURE TUBE

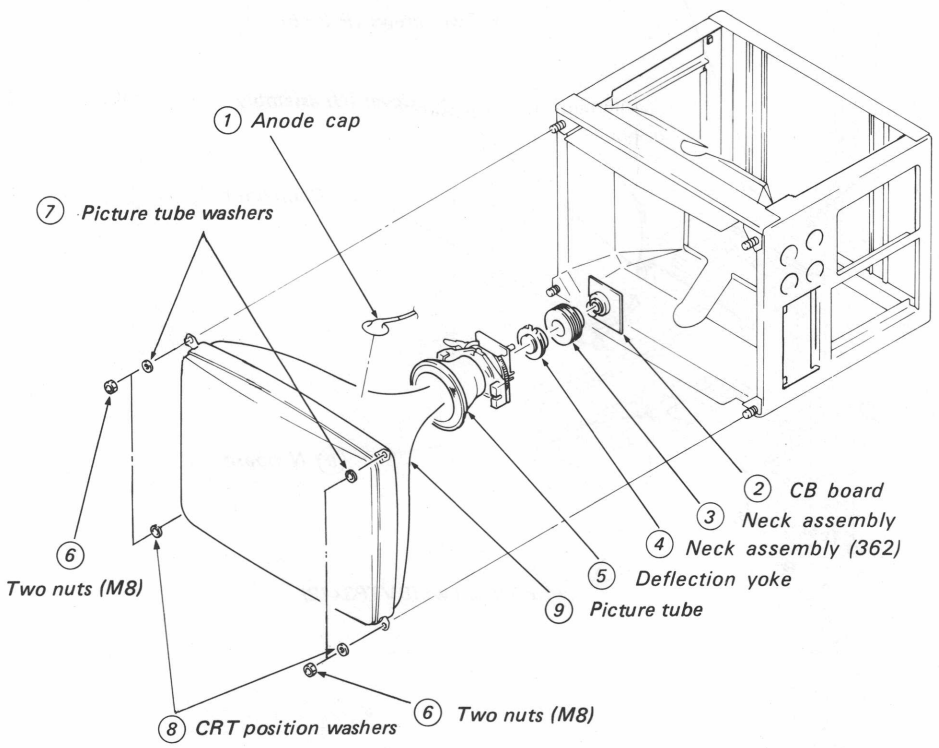

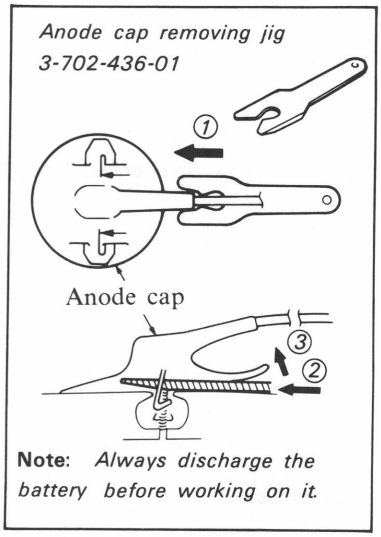

Note: *Always discharge the battery before working on it.*

2-23. INSTALLING AND REMOVAL METHOD OF HIGH VOLTAGE CABLE

(1) Removal

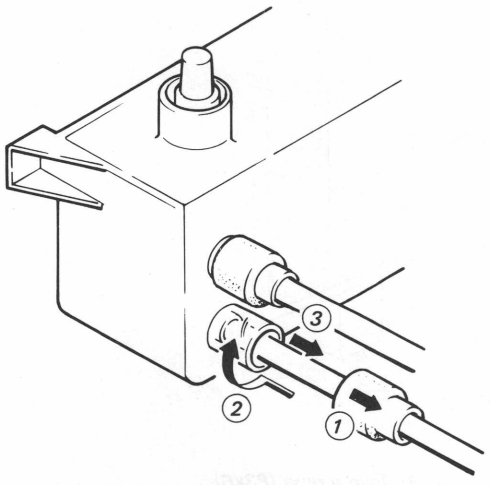

While pushing cable with ② and ③, turn 90 and pull out.

(2) During insertion

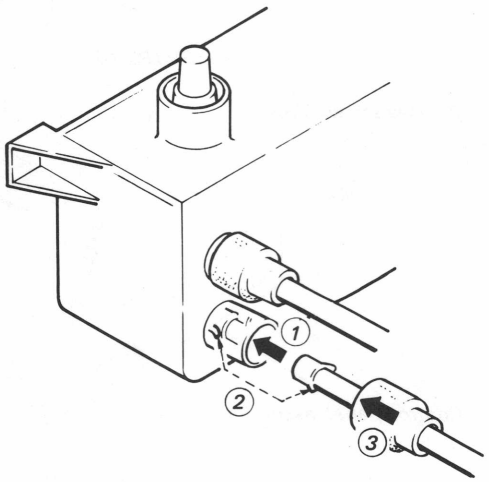

Confirm with ② that it is locked.

SECTION 3
CIRCUIT DESCRIPTION

HORIZONTAL OSCILLATOR CIRCUIT (D BOARD)

When power is turned on, the capacitors C15/C101 are charged through RV4/R28 so that the IC2-⑤ pin potential is raised. Since the IC2-⑤ pin is connected to the comparator inside IC2 internally, the transistor Tr1 is switched ON when IC2-⑤ pin potential is higher than VH, while the transistor Tr1 is switched OFF when IC2-⑤ pin potential is lower than VH.

If the time constant that is connected to the IC2-⑤ pin is smaller, then the oscillating frequency will be higher, accordingly. If the time constant is longer, the oscillating frequency will be lower.

This oscillator waveform is amplified inside the IC2 and becomes the horizontal drive pulse at pin ⑩ that is output through an emitter follower Q7.

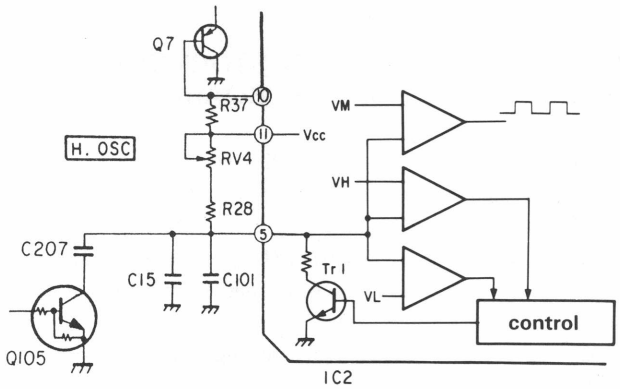

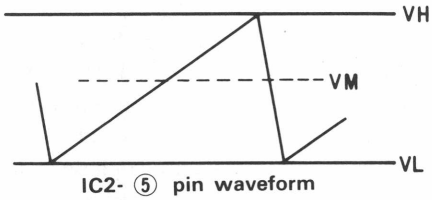

IC2-⑤ pin waveform

Horizontal oscillator circuit

AFC CIRCUIT (D BOARD)

AFC is the automatic frequency control loop that functions to detect the phase difference between the deflection circuit output and the input signal, by sampling the sawtooth voltage (this signal is obtained by integrating the horizontal deflection circuit output with R17/C10) with the H. SYNC pulse that is used as the gate signal. The gated sawtooth is then smoothed out.

The detected phase difference output is fed back to the IC2-⑤ pin through R27 so that the oscillating frequency deviation can be corrected automatically.

The picture phase can also be changed by shifting the horizontal deflection pulse phase (RV1, RV2, RV72, RV73 and IC1).

In the PR mode, Q105 is turned on, C207 is connected in parallel to C15 and C101, and the free-run frequency decreases.

H PHASE (PICTURE PHASE) ADJUSTMENT

HDTV A	16:9 (new specifications)	RV1
	5:3	RV2
HDTV B		RV72
PROG		RV73

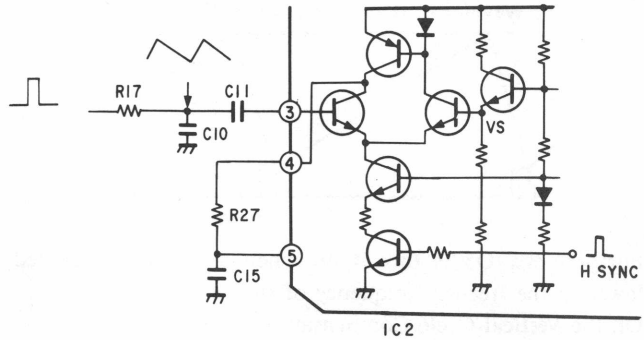

AFC circuit

VERTICAL OSCILLATOR CIRCUIT (D BOARD)

The vertical oscillator circuit operation is basically same as the horizontal oscillator circuit. But it does not need the AFC circuit unlike the horizontal oscillator block. It has simply the trigger circuit by the vertical SYNC signal.

The C16, R29, R26 are the oscillating time constants. When the SYNC signal is not input, the transistor Tr3 base potential becomes VL' that is determined by RV3, R21, R20. Whenever power is turned on, since the Tr4 base is grounded, the Tr3 is turned on. As Tr1, Tr2 are switched on, the Tr3 base reaches VH. The Tr5, Tr6 are also switched on to charge C16 rapidly. As the Tr4 base potential is becoming higher than Tr3 base gradually, Tr3, Tr1, Tr2, Tr5, Tr6 are turned off so that C16 is discharged through Tr7, R29, R26. As Tr4 base reaches VL', the Tr3 is switched on and repeat the afore-mentioned oscillation.

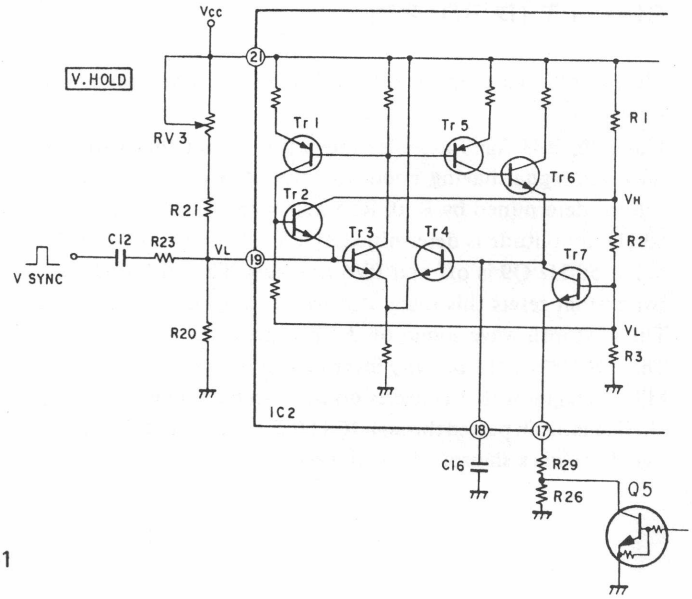

If SYNC signal is input while the C16 is discharging as shown in Figure, the Tr3 is put into conduction (ON), so that the C16 is started charging to obtain synchronization.

This output signal is amplified inside IC and becomes the positive polarity pulse at pin ㉒ . The pulse width of this signal is determined by the time constant of R34, C18 that are connected to pin ⑬ .

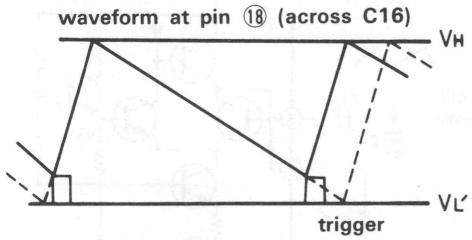

Furthermore, Q5 is turned on when a low fv is selected, lowering the free-run frequency of the vertical sync.

On the Vertical Cycle Compensation Waveform

There are many Miller integrator circuits (e.g. IC8, IC9 and IC10) inside the D board. If nothing is done to prevent it, their amplitude and phase would change when fv changes. Therefore, the input side resistance is set as shown in the figure, turning it on with the analog switch when frequency is 60 Hz and off when fv is low. In this way, the integrated output is kept constant.

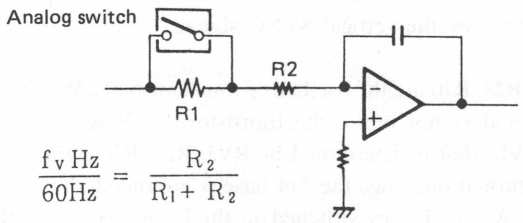

VERTICAL DRIVE WAVEFORM GENERATING CIRCUIT (D BOARD)

The operational amplifier IC7 (½) is used for sawtooth wave generation.

The C29, R63 form a Miller integrator circuit that generates sawtooth signal having good linearity. R63 is connected to a voltage determined by R60, RV5 and RV6. When frequency is 60 Hz, amplitude is determined by RV5. While at 60 Hz Q9 is on, at 50 Hz Q9 is off and RV6 operates. The Q10 works as a switch that resets this integrator by VD during retrace period. The sawtooth wave signal of ±6V is provided at IC7-① pin. **The IC7 (2/2) is the polarity invertor and IC8 (1/2) is the similar Miller integrator that converts output into parabolic wave at ⑦-pin that is again passed through IC8 (2/2) integrator so that output signal becomes sinusoidal (sine) wave.**

The vertical drive waveform is generated by mixing these sawtooth wave signal and the sinusoidal wave signal at IC9 (½). The vertical linearity correction can be adjusted by changing the sinusoidal wave amplitude gain with RV9.

The sawtooth wave from RV7 and the parabolic wave are mixed and input to IC8-② pin. Since RV7 can change the sawtooth wave vertical balance, the RV7 can consequently change the linearity correction balance at the top and bottom of picture at IC8-① pin as shown in Figure. The vertical drive waveform receives amplitude adjustment by RV10 and is output through a buffer amplifier IC9 (2/2).

Q13 is the picture size select switch to be used during set-up.

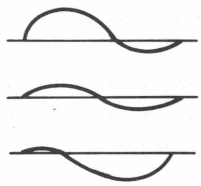

TOP AND BOTTOM PIN DISTORTION CORRECTION CIRCUIT (D BOARD)

The vertical drive voltage that is supplied from IC9-⑦ pin, is amplitude adjusted by RV18 and supplied to IC15-⑦ pin and is then routed to IC16-① pin.

This signal is two integrators of IC14 (1/2) and IC14 (2/2) that provides horizontal rate parabolic wave that is supplied to IC16-⑩ pin.

Q22, Q23 are reset switch where its timing is determined by IC12, IC13.

Since IC16 is a balanced modulator IC, signal is balanced-modulated by the pin ⑨ input signal. The output IC16-⑫ pin has therefore top and bottom pin correction waveform output as shown in figure. This output is sent through an emitter follower Q25. The horizontal parabola phase is determined by IC12 and IC13. The horizontal pulse from the horizontal deflection circuit is switched by Q19, and is integrated twice by L1, C41 to generate the parabolic wave. This waveform is passed through a comparator IC12 so that the reference pulse synchronized with the horizontal defection is obtained at IC12-⑦ pin.

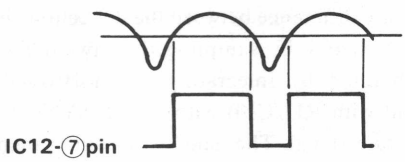

Using this reference pulse, a triangular wave is generated by Q20, R137, C63. This signal is input to comparator IC13-③ pin and output at IC13-⑦ pin. Dc voltage is supplied from RV17 to IC13-② pin so that the phase of this output pulse can now be changed by RV17. This output signal is routed to Q21 to be converted to the reset pulse of Q22, Q23.

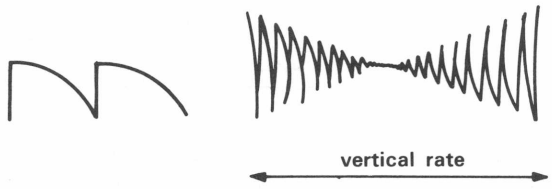

LEFT AND RIGHT PIN CORRECTION WAVEFORM CIRCUIT (D BOARD)

IC10-① pin (½) receives the mixed signal of the sawtooth wave from IC7-⑦ pin, sinusoidal wave from IC8-① pin whose amplitude can be adjusted by RV54, and the dc voltage from RV12. After passing through the integrator IC10, the left and right pin correction waveform is obtained at IC10-⑦ pin.

In the HDTV A, gain of this waveform is adjusted by R113 and RV14, then it is output via the buffer amplifier IC11.

The horizontal picture size control voltage is selected by RV15, then it passes through IC28 and the voltage follower IC11 before being output.

BLANKING WAVEFORM GENERATING CIRCUIT (D BOARD)

The horizontal cycle blanking pulse is generated by shaping the horizontal pulse with Q26 and Q28, then sending it out through Q109 and Q110. On the other hand, the vertical cycle blanking signal is input to Q27, then it undergoes AND gating with Q26 and it is output to the CA board as a composite blanking signal. In the HDTV B, a variable blanking pulse is added by Q114.

This pulse is generated as follows.

The pulse from the horizontal deflection circuit is input to Q115, the pulse from Q115 is input to the double integration circuit composed of L7 and C223 and converted into a parabola wave. The phase of this wave is changed by RV76. It passes through C224, then it is input to ③-pin of the comparator IC31 and a pulse corresponding to the voltage at ②-pin is output from IC31-⑦ pin. This pulse is added as the above-mentioned composite blanking signal, assuming a wide H size signal, e.c. (provisional MUSE specifications).

DESCRIPTION OF CONVERGENCE CORRECTION SYSTEM

Prior to the circuit description, the convergence correction method is first described as follows.

BEAM ALIGNMET ADJUSTMENT

The TRINITRON employs the in-line type guns. There is possibility that the RGB beams will not go through the deflection center because of the non-uniformity in gun assembling process, or the tolerance when guns are sealed into neck. As the result, the side beams become nonsymmetrical with regard to the center beam, so that the convergence becomes difficult.

To cope with this problem, this equipment uses six pole magnet to be used for beam alignment correction. The actual alignment procedure is provided in the Alignment section.

beam nonsymmetrical (horizontal)

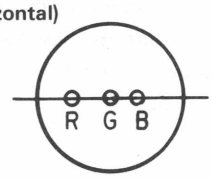

beam nonsymmetrical (vertical)

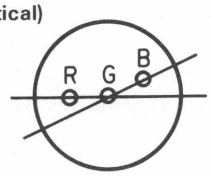

TRANSVERSAL CONVERGENCY CORRECTION

The super fine pitch TRINITRON convergence system outline is simply described as follows. The DY (deflection yoke) used in this system has an uniform magnetic field in order to avoid CRT beam spot distortion.

The CRT focus is therefore superior,but transversal convergence error as shown in Figure can happen.

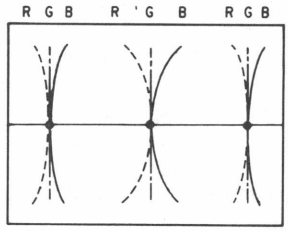

Y-axis direction transversal convergence error

(When the X-axis transversal convergence error is corrected.)

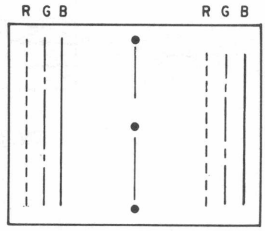

X-axis direction transversal convergence error

(When the Y-axis transversal convergence error is corrected.)

ELECTRO-STATIC CONVERGENCE

One of unique feature of the TRINITRON is the electro-static convergence that is described as follows. The Figure shows the gun structure. The G6 is the convergence control plate (CP) that is receiving the convergence voltage (CV 0.97×HV) from high tension supply (HV) through a high tension resistor (HVR). Since the center beam (green) receives no electric field strength, the center beam is not bent but runs straight.
However, the side beams (red and blue) are bent by the electric field produced by the G6 convergence control plates.

Controlling this CV voltage moves the convergence point. The electro-static system therefore is capable of convergence correction. The widely used convergence correction system employs an electro-magnetic coil, which deforms the beam shape and gives adverse effect on focus. But this electro-static system, using the CV electrode does not have such disadvanges but provides good focussing characteristics.

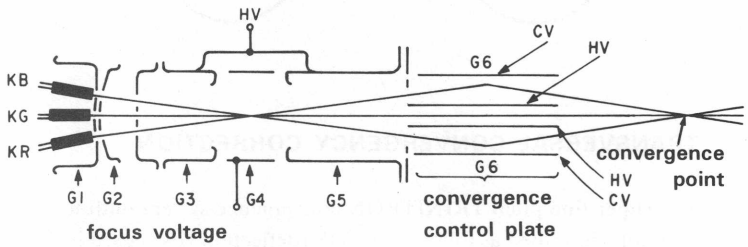

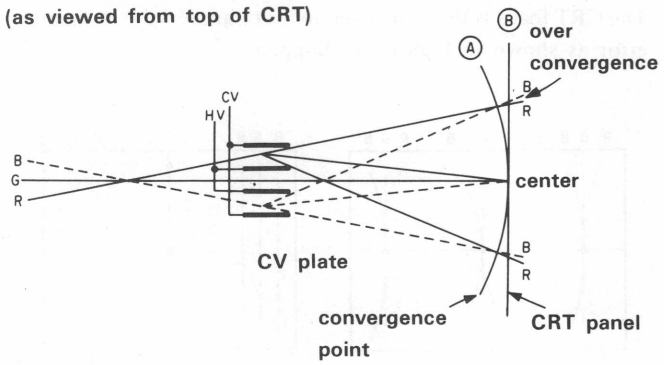

Turning back to the X-axis direction convergence error problem, the reason why the X-axis direction convergence error is generated, is described as follows. The Figure shows that the point Ⓐ is the R, G, B, convergence point when the dc convergence voltage is applied to the CV electrodes, indicating that the convergence points become cylindrical shape. However, the CRT front panel Ⓑ has nearly flat shape rather than cylindrical shape. It results that the both sides of the CRT front panel have excessive correction of convergence. This is the reason of the X-axis direction convergence error. The Y-axis direction transversal convergence error is, in the same manner as the X-axis convergence error, able to be corrected by applying the correction voltage to the CV electrodes as shown in Figure.

The above two convergence correction signals are mixed so that the mixed waveform as shown in Figure is the needed convergence correction waveform.

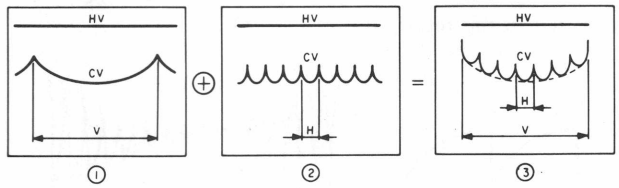

Now, since the CV electrode is receiving the very high voltage (≒29.1 kV), the DCT (Dynamic convergence Transformers) is used to transmit the convergence correction waveform in order to get insulation. Since the vertical rate voltage is impossible to transmit by use of transformer, chain of pulse are inserted during the retrace period of horizontal deflection. These pulses are peak-clamped by the diode peak clamp circuit in the DCT secondary circuit so that the correction voltage is transmitted. The Y-axis direction transversal convergence error can be corrected by changing the amplitude of these pulses.

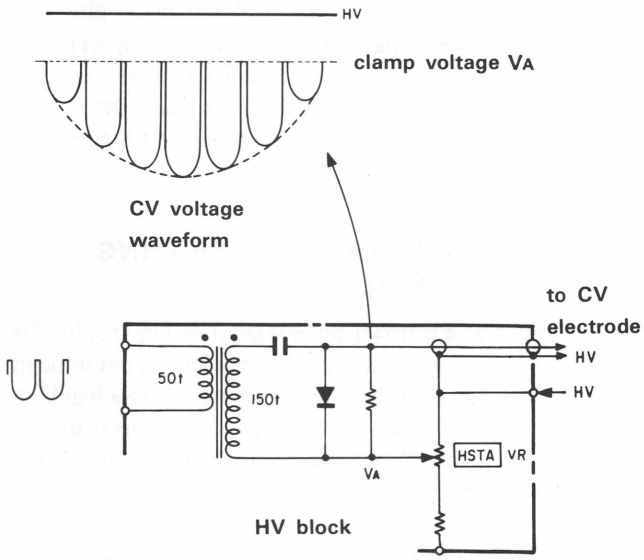

LONGITUDINAL CONVEGENCE CORRECTION

The longitudinal-direction convergence error does not exist from the princple because the gun structure is designed as in-line. However, due to the non-uniformity in assembling the CRT and DY, and also due to the earth magnetism effect, very small amount of the longitudinal convergence error is taking place.

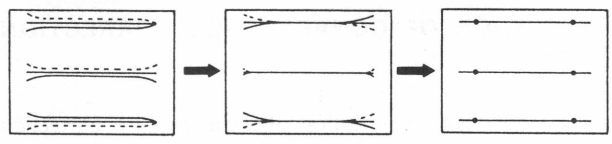

① longitudinal direction convergence error

② after corrected by NTC

③ after further corrected by CY

The longitudianl convergence error is corrected by two methods.

l. The longitudial convergence error along with the Y-axis (dc components) is corrected by NTC (Neck Twist Coil) as shown in Figure ② while, 2. The longitudinal covergence error in both sides (ac components) is corrected by the CY (Convergence Yoke), as shown in Figure ③.

The correction waveforms needed to carry out the convergence error correction as shown in Figure ②, ③, are the NTC and CY correction waveforms as shown in Figure ①, ②.

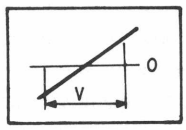

①NTC

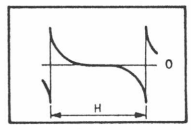

②CY

There are two CYs in HDM-2830/2830E. One of them performs the previously mentioned operation, but since a high-frequency current is sent through it (the CY is an inductance) and the blanking period is short (3.77 μs), the correction waveform is delayed, and the left side cannot be properly corrected. Therefore, a sub-CY is used for complementary correction.

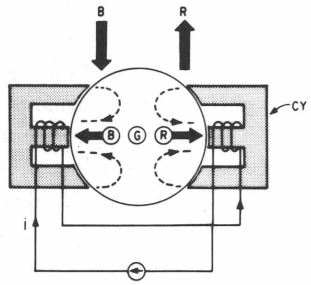

(As viewed from neck end)

Figure shows the CY (Convergence Yoke),as viewed from the neck side. As the CY (Convergence Yoke) is generating the magnetic fluxes, it provides the physical strength toward beams as shown in Figure. The strength on the side beams area (B and R) are, as shown in Figure, generated in opposide directions each other by the CY synthesized magnetic fluxes. The one direction of strength is to raise the one beam upward direction, while the another direction is lowering the another beam downward direction.

The center beam receives no strength from the CY's magnetic fluxes because the magnetic fluxes are cancelled to zero in the center beam area. The red and blue beams moves in the vertical directions symmetrically against the green beam in the center.

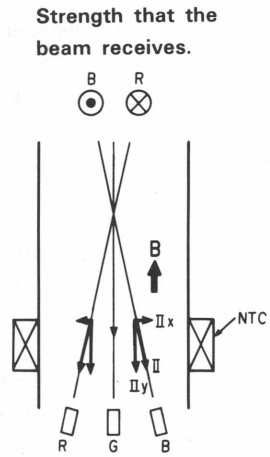

(As viewed from the the top of CRT)

①

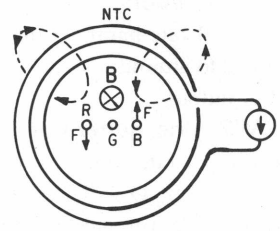

(As viewed from the CRT neck end)

②

The longitudinal convergence correction along with the Y-axis is carried out by the NTC (Neck Twist Coil). The NTC (Neck Twist Coil) has the coil winding as shown by the dotted line in Fig. ②. The NTC produces the magnetic flux as shown B in the same Fig. ①. Since the magnetic flux B is in parallel with the center beam, the center beam receives no strength, and does not move at all. The side beams' currents I and II receive strength in two directions of the Ix direction and the Iy direction as vectoranalyzed in Fig. ②. Only the Ix component alone receives strength from the NTC magnetic flux and is bent. Therefore, the red and the blue beams are shifted upwards and downwards symmetrically against the green beam by the NTC coil's magnetic flux change. This is the description of the convergence correction system. Following is the circuit description.

MODULATION WAVEFORM GENERATING CIRCUIT (D BOARD)

The convergence correction waveform is made by adding the analog correction signal and the digital correction signal.

The analog correction system provides the fifteen convergence adjusting points on the monitor screen. These are three adjusting points in the horizontal direction and five adjusting points in the vertical direction. The convergence adjusting controls (veriable resistors) correspond to the adjusting points on the monitor screen. The three horizontal convergence adjusting points are provided at five of each vertical convergence adjusting points i.e. total fifteen convertence adjusting controls are provided. Since the picture screen is divided into five blocks vertically for the convergence correction as shown in Figure the five different modulation waves as shown in Figure are prepared for vertical convergence correction.

Fig. a signal is to be used for top of picture correction,

Fig. b is to be used for top-center of picture correction,

Fig. c is to be used for center of picture correction,
Fig. d is to be used for bottom-center of picture correction, and
Fig. e is to be used for bottom of picture correction.
These waveforms are generated principlely from the vertical rate parabola waveform and the half-of-vertical rate sinusoidal (sine) waveform, after they are divided.

1) V. parabola

The vertial rate parabola that is obtained from IC8- 7 pin is clamped to ground potential by the clamper circuit of Q49, Q50, and is output.

2) V/2 sine generator

The vertical rate square wave from IC18(2/2) is differentiated and shaped by Q34. Then the pulse that is 180 degrees phase apart from the vertical drive pulse (VD), is obtained. This pulse and the VD are added and are applied to the Miller integrator of IC15(2/2) as its reset pulse. Then half-of-vertical rate sawtooth weve (V/2 sawtooth wave) is obtained from the Miller integrator IC15- 1 pin output. This output is then again integrated by another Miller integrator IC19(1/2). Then the parabola waveform is obtained. The output parabola waveform is converted into sinusoidal (sine) wave by the active filter of Q40, Q43, is clamped to the ground potential by the clamper Q44, Q45, and is output. Accordingly the repetition rate of this sinusoidal wave becomes half of the vertical rate.

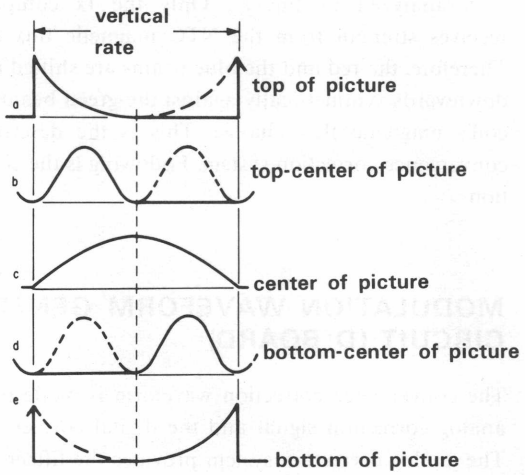

The above described three voltage waveforms are polarity inverted respectively by IC20 (2/2), IC20 (1/2) and IC 19 (2/2) so that polarity-inverted voltage-waveforms are obtained respectively. The IC18 (2/2) is the zero-cross detector. If a sawtooth wave having its average level equal to ground level, is input to this zero-cross detector, the zero-cross detector outputs 50% duty cycle square wave. This output voltage drives the analog switchers of IC23 (2/3), (3/3), and IC24 (2/3), and (3/3) respectively. These analog switchers switch the input voltage waveforms (vertical parabola and half-of-vertical rate sine wave) in vertical rate in time domain.

HORIZONTAL DIRECTION CONVERGENCE CORRECTION CIRCUIT (D BOARD)

Convergence of the left part of picture, is corrected as follows. The IC26-⑦ pin signal that is synthesized by RV37 thru RV41, is switched by the horizontal rate pulse from the horizontal deflection at Q69. This output is converted into parabola waveform by the two times intergration by L5, C139. This parabola output is amplified by Q70 and is zero-clamped by IC26 in the center of horizontal trace of picture. The clamp pulse is supplied from Q33. The clamped parabola signal is supplied from Q71 to IC24 (1/3)-③ pin. This is the convergence correction signal for the left part of picture. The convergence correction signal for the right part of picture is generated in the same manner. The convergence correction signal synthesized from RV47 thru RV51, passes through the equivalent circuit by IC27 in order to make up the correction signal for right part of picture, and is then supplied to the analog switcher, of IC24 (1/3)-③ pin. Since this analog switcher is receiving the horizontal rate control voltage input to its control pin of IC24-① pin, the correction waveform is switched during the former half and latter half of horizontal trace i.e. the right half and left half of horizontal scan of a picture are receiving different convergence correction waveform respectively.
This correction waveform output is supplied through R387 into Q66. Since Q66 is receiving also the digital correction signal through R406, Q66 provides the addition of analog and digital correction waveforms. This is the correction signal for the right side of picture. The convergence correction signal for the center of picture is obtained from RV42 thru RV46 and is output from IC25-⑦ pin. This signal is passed through R377, R380 and is input to Q65. The digital correction signal is at the same time provided through R374, and added to the analog correction signal so that the digital and analog correction signals are added and input to Q66. This output signal is converted into a chain of pulse signal as Q31 pulse is input to D15.

Accordingly, the horizontal convergence correction signal from Q68 is the voltage waveform that is the addition of Q65, Q66 and is output from Q68.

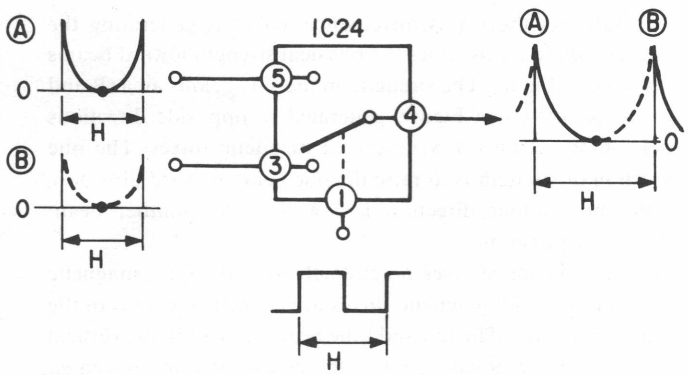

VERTICAL DIRECTION CONVERGENCE CORRECTION CIRCUIT (D BOARD)

The vertical direction convergence correction circuit, in the same manner as the horizontal direction convergence correction circuit, picks up the waveforms from RV22 through RV26 and RV32 through RV36. These waveforms are clamped to the zero potential in the center of horizontal scan. The left half and the right half of scan have the different waveforms as switched by IC23(1/3), and are buffered by emitter followers Q59, Q60, and are output. The digital correction waveform is supplied through R301 and is added to the analog correction waveform at Q59. The vertical direction convergence correction for the center of scan is mixed by RV27 through RV31 and amplified by IC25(1/2), Q63, Q64 current amplifier, and drive the NTC. The digital correction waveform is added through R347, at IC25. Furthermore, the waveform from the circuit including RV22 to RV26 (which incorporates an auxiliary circuit to make up for insufficient correction of the left side) is converted into a pulse train by Q51, it passes through IC32 and the amplifier composed of Q117 and Q118, then it is output to the E board. This becomes the sub-CY correction waveform.

VERTICAL DEFLECTION OUTPUT CIRCUIT (E BOARD)

The vertical deflection sawtooth wave and the top/bottom of scan pin-cushion correction waveforms are input the differential amplifier Q9, buffered by Q12, amplified by Q10, Q11, Q13, Q14 the SEPP complementary amplifiers, and drive the vertical deflection yoke. The top/bottom of scan pin-cushion correction transform T3 (VPT), that is connected to the output terminal of the vertical deflection transformer, picks up only the horizontal rate top/bottom pin-cushion correction waveform, steps up this waveform, and modulates the deflection yoke current by its secondary winding. The R45, R46, R47, that are connected to T3, are the damping resistors for T3 and the vertical deflection yoke, that improves the deflection at the top of picture. The resistor R49, that is connected to the bottom of VPT's secondary winding, detects the deflection; yoke current, and applies negative feedback (NFB), in order to improve the deflection waveform. The thyristor D15 is turned ON, as it receives the vertical deflection yoke's fly-back pulse during the vertical retrace period through R41, C12 to its gate, so that the deflection current linearity is improved by introduing the high tention voltage during the retrace period. The inductance L7 in the D15 anode circuit converts the sharp current change in the thyristor ON transient, into the resonant current by L7, C20 so the thyristor D15 will surely turned OFF when the thyristor triggering current becomes lower than its keep current.

HORIZONTAL DEFLECTION OUTPUT CIRCUIT (E BOARD)

The left, right sides' pin-cushion correction is performed by modulating the power supply voltage of the horizontal deflection circuit. This pin-cushion correction is executed by the circuit of IC1, Q1, Q2, Q3. Q2 is the output transistor while IC1 is the error amplifier. The left/right pin-cushion correction waveform from D board and the picture size determining dc voltages are introduced to IC1 ⑤ pin. The IC1 ⑥ pin is the detect voltage by R9 through R11.

The horizontal drive pulse from the D board is introduced to Q4 that drives the horizontal drive transformer T1 (HDT). The horizontal drive transformer T1's secondary circuit is connected to the horizontal deflection output transistor Q5 through R17 and the speed-up diode D3 that is switching Q5. The Q5 collector circuit is connected to the horizontal deflection yoke, the resonance capacitor C10, C11, C98, C99 and C100 and the damper diodes D4, D60, D61 and D80. The Q5 collector circuit is also connected to the left, right pin-cushion correction power supply that is fed from the horizontal output transformer T3 (HOT).

In the prog mode, the horizontal frequency f_H drops. The peak voltage Vcp of the flyback pulse is as follows:

$$Vcp = E\{1 + \pi/2\ (1/f_H\ Pw - 1)\}$$

E: power supply voltage
PW: flyback pulse width
Thus, Vcp rises when fH drops, and Q5 may be damaged. To prevent this, turning on Q24 is the prog mode short-circuits C11 and C99, expands Pw, and lowers Vcp.

One of the secondary windings of the horizontal output transformer T2 (HOT) generates the horizontal position adjustment power at D6 and D7, and performs horizontal position adjustment by means of Q6 and Q7. The other secondary winding is a pulse winding used for dynamic focus. The signal it generates is converted into a parabola wave at the circuit composed of L3 and C90, then sent into the T4 DFT.

The horizontal deflection current that flows through the horizontal deflection yoke, also flows through the horizontal linearity coil L2 (HLC) and the S-shape distortion correction capacitor C16, C107. Since the linearity coil L2 (HLC)'s inductance changes in accordance with the amount of current flowing, the left, right sides of picture linearity is improved. The capacitor C16 and C107 corrects the linearity difference between the center of picture and both sides of picture.

DYNAMIC FOCUSSING CIRCUIT (E BOARD)

The transformer T2 (HOT) provides the horizontal pulse output voltage that is integrated by L3, C90, and is again integrated by the primary winding of the dynamic focus transformer T4 (DFT), so that the secondary winding generated approximately 800 Vp-p parabolic voltage. The transistor Q34 amplifies the IC10 ⑦ pin (D board) output vertical rate parabolic voltage up to approximately 250 Vp-p.

Since T4's secondary winding is connected to the Q34 output circuit, the another end of the T4's secondary winding supplies the dynamic focus waveform that is the addition of the horizontal rate parabola signal and the vertical rate parabola signal. This dynamic focus signal is fed to E-6, to the K board, to the capacitor C1, and then to the FOCUS adjusting variable resistor so that the focus voltage is modulated.

The AFC pulse is rectified by D18, C28 that generates approximately −300V power that is supplied to Q34.

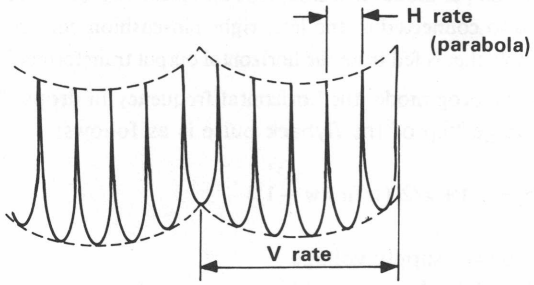

VERTICAL DIRECTION CONVERGENCE OUTPUT CIRCUIT (E BOARD)

The vertical direction convergence correction waveform from the D board passes through the current amplifier circuit composed of Q22, Q23, and Q25 through Q28, and is then sent to CY. On the other hand, the auxiliary vertical direction convergence correction waveform passes through the current amplifier circuit composed of IC8, and Q44 through Q47, and is then sent to the sub-CY.

HORIZONTAL DIRECTION CONVERGENCE OUTPUT CIRCUIT (E BOARD)

The horizontal-direction convergence correction waveform from the D board passes through the voltage amplifier circuit composed of Q16 to Q21, then it is sent into the DCT transformer.

"EHT" REGULATOR CIRCUIT (E BOARD)

The horizontal drive pulse, that is supplied from the terminal E3, is amplified by Q29, Q30, coupled by T5 (CDT), and drives the high voltage output amplifier Q31. This transistor Q31's collector has C47, D29, T6 (LOT), and (after passing through the K board) the fly-back transformer (FBT). This circuit operates in exactly same manner as the horizontal output circuit.

The +B power is supplied through T6. The FBT is the multi-singular type transformer, having six rectifying diodes in the secondary circuit. The second tap of the FBT supplies the focus voltage.

The highest voltage of the FBT is the high tension output that is routed through the HV block, and to the CRT anode. The high tension output is, at the same time, divided into 1/3570 voltage by the high tension resistor network, and is supplied to the connectors E17 ③ pin and to E17 ⑤ pin. The 1/3570 divided high tension voltage, appearing at the connector E17 ③ pin is used as the high tension's error voltage detection signal which is passed through the buffer IC3(2/2), and to the error amplifier IC3(1/2) where the high tension's error voltage is compared with the reference voltage (VRV=8.95V). The comparison output is amplified and drives the differential amplifier IC4 ⑤ pin.

Since the IC2 ⑦ pin is connected to the IC4 ③ pin, the IC4 ① pin repeates the on, off operation that charges the C62, that is forming the sawtooth generator. The IC4(1/2) is the pulse width modulation (PWM) circuit. The pulses that is generated at the IC4 ⑦ pin is buffered by Q32, and then gates D57. This circuit thus enables to control the back pulse's energy generating at anode of Q57, that is namely controlling the energy to the FBT. This is the "EHT" regulator circuit operation.

This EHT regulator is generating, at the same time, the various outputs such as ±22V output (used for vertical output circuit), +30V (used for CY drive) from T6 (LOT), 6.3V (for heater), −120V (used for G1 bias), etc.

HIGH VOLTAGE HOLD-DOWN CIRCUIT (E BOARD)

The feed-back voltage that is supplied from the HV block, appearing at the terminal E-17 ⑤ pin is normally 8.40V. This signal is input to the comparator IC5(2/2) ⑤ pin so that it is compared with the another input voltage at IC5 ⑥ pin input. The voltage value of the VHV signal is determined by R140, R141 so it will be 8.90V±0.05V. Therefore, IC5(2/2) ⑦ pin output is normally "LOW". However, if the high voltage should increase abnormally by some accident until the IC(2/2) ⑤ pin + input voltage exceeds the VHV voltage, the IC5(2/2) ⑦ pin output becomes "HIGH", that turns on the thyristor D45. Since the D45 anode is connected to the high voltage convertor drive IC2, the high voltage is held-down as the D45 is turned on to remove the high voltage drive pulse.

The high tension voltage value is calculated by the following equation to start the hold-down operation.

$$HV\ (PRT) = 8.90\ (\pm 0.05\%) \times 3750\ \left(\begin{matrix}+3\% \\ -1\%\end{matrix}\right) = 31.8\ \begin{matrix}+1.1 \\ -0.5\end{matrix}\ kV$$

BEAM PROTECTOR CIRCUIT (E BOARD)

If the CRT anode current should increase abnormally by some accident, This beam protector circuit stops the generation of the high voltage which is a kind of the ABL circuit. This equipment has two beam protectors.

The anode current detection method is through the use of detector resistor that detects the FBT's secondary current (which is the addition of the CRT curent + high tension resistor's current + focus resistor current). The detected signal is in the form of voltage signal. The detector resistors are R134, R135, R136, R182. As the ABL current flows, the connector E-17 ⑦ pin voltage is decreased. Since the current flowing through the high tension resistor and focus resistor, which is the bleeder current, is constant,the abnormal increase of CRT current decreases the IC5(1/2) ③ pin ⊕ input voltage lower than its ② pin ⊖ input voltage (VRV). Therefore the IC5 output becomes LOW. Since the IC2(2/2) forms a hysteresis comparator, its output is kept LOW which stops the high tension comparator drive IC2(2/2) through D43. This is the beam protector-1 operation.

The D44 cathode is connected to the terminal E-17 ⑦ pin (ABL) at the same time. If the beam protector-1 should not start operating by some accident, the D44 conducts in turn, that decreases the IC6(2/2) ⑤ pin input voltage. As the IC6(2/2) ⑤ pin + input volage becomes lower than its ⑥ pin − input voltage, its IC6 ⑦ pin output becomes "HIGH" to "LOW", that drives the diode D54 into conduction. Therefore, the IC2 output is cut-off to stop generation of the high voltage. This is the beam protector-2 operation.

CRT (CATHODE RAY TUBE) PROTECTOR CIRCUIT (E BOARD)

If the deflection circut should fail to operate and should stop to scan, it will result in burning of fron phospher plate of the CRT. In order to avoid the phospher burning, the high tension circuit operation is stopped as soon as the horizontal deflection output or the vertical deflection output is stopped its operation. The horizontal and the vertical deflection output is detected as follows.

The horizontal deflection circuit T2 (HOT)'s secondary pulse is rectified and smoothed out by D46, C76 to be converted into the dc voltage that is supplied to the IC6(2/2) ⑤ pin. Since the IC6 ⑥ pin is receiving dc 6V from the D48, stoppage of the horizontal deflection decreases the ⑤ pin voltage lower then the ⑥ pin voltage so that the IC6 ⑦ pin output is set "LOW" that stops the high tension drive operation through D54.

The vertical deflection circuit has the same operation. The vertical deflection output pulse is converted into dc voltage by D50, C80 that is connected to IC6 ③ pin. If the vertical deflection should stop, the ③ pin voltage becomes lower than ② pin voltage so that the output IC6 ① pin becomes "LOW" that stops the high tension.

The C78, R170 are used for prevention of errorneous operation of this protector circuit when the power switch is turned on.

LINE FILTER CIRCUIT (F BOARD)

The line filter is made from the F board T1, T2, C1, and C3 thru C6. The input circuit of this filter is connected to the AC INLET (CNP901).

AC POWER LINE VOLTAGE SELECTION (F BOARD)

The ac power line voltage selection is made by the voltage selector (S902). Either the voltage doubler rectifier or the full wave rectifier is at the same time selected by the voltage selector. AC100V to AC120V or AC220V to AC240V input line voltage can be used by selecting the proper position of the voltage selector.

Ac power line selection

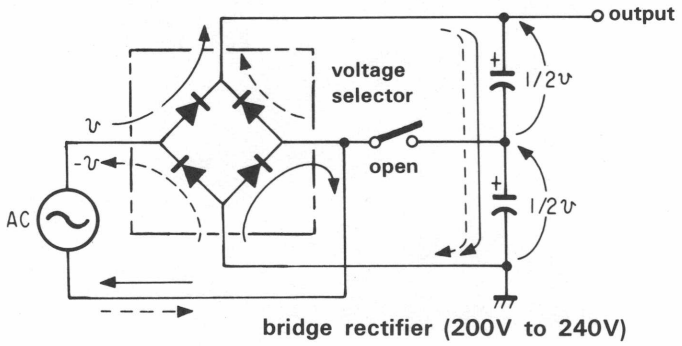

bridge rectifier (200V to 240V)

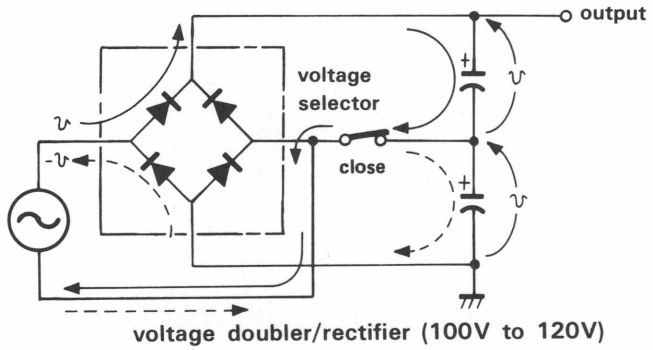

voltage doubler/rectifier (100V to 120V)

DEGAUSSING CIRCUIT (F BOARD)

The degaussing coil is used when CRT is going to be demagnetized. The demagnetization is done by the degaussing coil (L901) that has the posistors connected in series. The ac alternating damping curring is flown through the degaussing coil for demagnetization. The relay (RY-1) in the F board and the transistors Q1, Q2 in the GA circuit board flow the degaussing current automatically during the initial few seconds after POWER switch is turned on. When the front panel degauss button is pressed, the current also flows in the same manner. The posistors are selected for ac 100V-120V use (5 ohms) or ac 220V-240V use (30 ohms) by the voltage selector operation.

EXCESSIVE AC INPUT VOLTAGE PROTECTION CIRCUIT (F BOARD)

If the excessive input voltage is applied to the ac power input line, or if the voltage selector's setting is errorneously made and the power switch is turned on by mistake, the protection circuit of D1 etc.,in the GA board starts operating to blow the ac fuse (F901). The circuit is designed to start operating when the ac input voltage of approximately 14% or higher voltage than the specified voltage that is rated by the voltage selector is input.

±12V POWER SUPPLY (GA BOARD)

The ±12V power is supplied from the three terminal regulator IC1, IC2, IC3, IC4, and distributed to each circuit boards.

POWER SUPPLY

This power supply has the three types of switching power supplies (CR15EN, SF11, and TK18).

The AC input voltage is directly input to CR15EN. The DC voltage that is rectified by the D2 of the F board is input to SF-11 and TK18.

When the power switch is turned on, the CR15EN starts to output 5V and ± 12V. This 12V becomes the starting power supply for the TK-18 that generates 115V and ± 15V. This 15V becomes also the starting power supply for SF-11 that generates 135V and ± 15V. These voltages are distributed to each circuit board at the GA board.

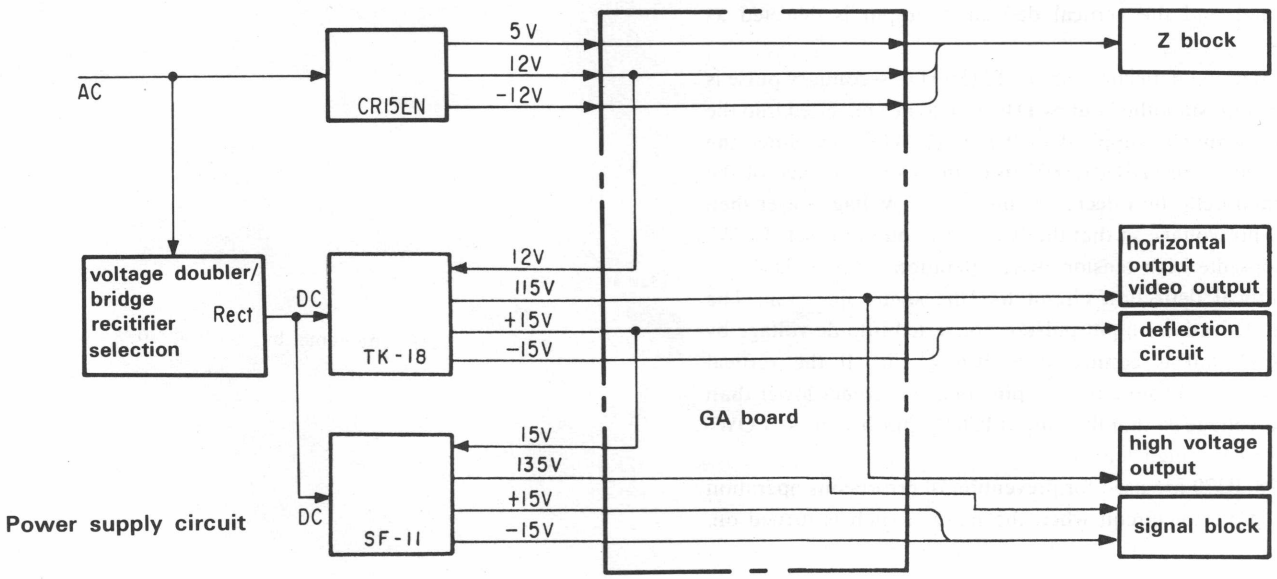

BEAM LANDING CORRECTION CIRCUIT (R.W BOARD)

This monitor is equipped with the six pieces of the beam landing correction coils (LCC=Landing Correction Coil) around the circumference of the CRT. The optimum beam landing is maintained by flowing the appropriate correction current. This beam landing correction is applied to the following points.

1. Landing correction that is generated by the direction of monitor installation (horizontal earth's magnetism).
   Note: This circuit does not correct for the vertical earth's magnetism. It is corrected by the purity magnets inside.)
2. Correction for the landing change due to change in ambient temperature.
3. Correction for the landing change due to change of beam current in average.
4. Correction for the landing change due to specific CRT's landing characteristics.
5. Correction for the landing change due to partial disturbance of the ambient magnetic field.

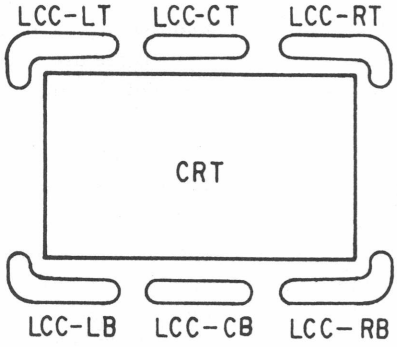

(As viewed from CRT end)

Fundamental correction circuit of the landing correction system is shown as follows. Explanation is discussed block by block.

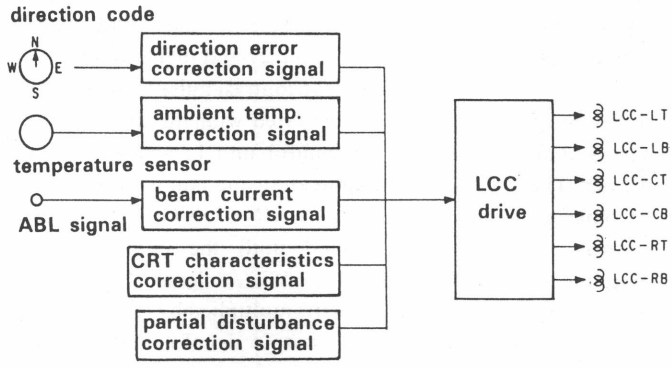

Fundamental block diagram

Direction Correction Signal

As the monitor is installed, it receives the effect of earth's magnetism. The effect of the earth's magnetism is different depending on the direction of the moniitor installed. The beam landing receives its effect and the landing change due to the earth's magnetism change corrected by determining the polarities of the six pieces of the LCCs respectively. Flowing the six different ac sinusoidal electric currents through the six LCCs respectively as shown in Figure. 3, can correct the beam landing error due to the earth's magnetism.

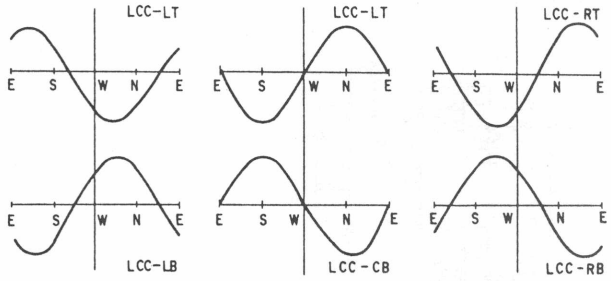

Direction correction current for LCC

This system has the digital memory that memorizes the direction data for every 1/16th direction. These digital data are memorized in IC3 memory as shown in Figure. 4 and are supplied to the coils of LCC-LT and LCC-RB only. The switch S1 in the W board provides the 4 bit direction data that corresponds to the ROM addresses A0 through A3. The least address A4 receives 0 and 1 output alternatingly at vertical rate, which is supplied from IC2 ⑦ pin. Thus the landing correction data are obtained from ROM and determined by S1, and are supplied to the dual D/A convertors of IC4 where data are latched. These are dual data for LCC-LT and for LCC-RB. These two digital data are fed to the IC4 dual D/A convertor alternatingly at vertical rate. The analog converted data are then buffered and output to the LCC driver circuit as the landing correction signal. The LCC-LB and LCC-RT correction signals are obtained by reversing the LCC-LT and LCC-RB signal with IC5(2/2) and IC6(2/2).

Amplitude of these waveforms can be adjusted by shifting the D/A convertor's reference voltage with RV1, depending upon the strength of earth's magnetic field effect. The LCC-CB correction signal is obtained by adding both the LCC-LB and LCC-RT correction signals by IC7(1/2). The added output is further inverted to produce the LCC-CT correction signal. Amplitude of these signal waveforms can be adjusted by RV2, and adjusted depending upon the strength of horizontal earth's magnetic field effect.

Direction	Address					Data
	A4	A3	A2	A1	A0	
North	0	0	0	0	0	LT0
	0	0	0	0	1	RB0
North/North/East	0	0	0	0	0	LT1
	0	0	0	1	1	RB1
Northeast	0	0	1	0	0	LT2
	0	0	1	0	1	RB2
⋮	⋮	⋮	⋮	⋮	⋮	⋮

Beam Current Correction

If the average beam current changes, the CRT's internal mechanical components are affected by average beam current change so that the CRT's internal mechanical components are thermally deformed. Therefore, the beam landing characteristics is also affected. The correction signal for the thermal change is generated by the use of the RC's integral characteristics, as shown in Figure.

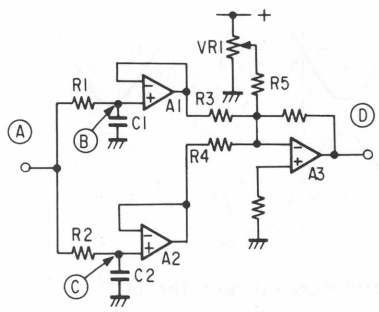

(a)

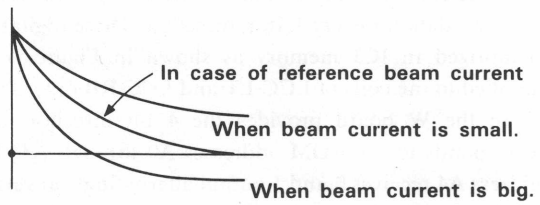

(b)

The Figure. point Ⓐ is receiving the input voltage that corresponds to the average beam current. This input voltage is produced by the IC11, using the E board's ABL signal. The point Ⓑ and the point Ⓒ have the integrated output voltage that are fed to the voltage followers of A1 and A2. These output are inverted and added to make the output at point Ⓓ. The R1, C1 in Figure. provide longer time constant while the R2, C2 provide shorter time constant. The longer time constant produces the slower curve as shown in Figure. while the shorter time constant produces the sharper curve. These two curves are mixtured to provides the output correction signal. The adjustment VR1 is the level-shift that is adjusted so that the correction output becomes 0 when the average beam current is present. The output at point Ⓓ is further attenuated by other resistors so that the optimum correction amounts are provided for respective corners, and then applied to respective LCC drive circuits.

The practical circuits have the two types of pre-determined typical curve of landing drift so that the most closest curve is selected and applied to respective corners.

CRT Characteristics Correcton Signal

Each CRT is placed in the standard ambient temperature, flowing the reference beam current, and waits until the CRT operation is stabilized. The beam landing correction is performed under this conditons by adjusting the W board's six adjustments from RV7 through RV12. These six adjustments correspond to the respective LCCs. The output of these adjustments are the landing correction signals for the specific CRT. If these adjustments are altered, the landing correction signals are also changed its correction amount.

Partial Correction Signal

When the monitor is installed, there may be occasion that the direction correction cannot cover the landing error fully. Then the most precise landing correction adjustments are provided by this partial correction system.

Respective six LCCs are equipped with the adjustments of RV1 through RV6 on the W board, that are used for the partial correction of the landing error. Each outputs are connected to the analog switches of IC1, IC2 so that each correction circuits can be switched on or off by the switch S3 depending upon the need for partial landing correction.

LCC Drive Block

Each correction signals are added by the sum amplifiers that are connected to the analog switches of IC19, IC20, and then applied to the constant current circuit consisting of operational amplifier and complementary output circuit. These analog switches of IC19, IC20 stops flowing the current through the LCC during when the internal degaussing is operating and during when the switch S2 of the W board is in off position.

GAIN (Drive) and CONTRAST Control Circuit (B_G, B_D BOARD)

The Drive and the Contrast are controlled by the B_G board and the B_D board. Each circuit descriptions are discussed in latter section. Here the control method of the Drive and Contrast are discussed.

The Drive and the Contrast are controlled by the contrast pulse that is inserted during the horizontal blanking period. This method can remove the adverse effect of the amplifier gain's drift etc., that results in the contrast change and in the white peak's color temperature change. This constrast pulse is generated by the B_G board. Amplitude of the contrast pulse is determined by the front panel CONTRAST control. The contrast pulse is routed to the switch SW1 of the B_D board. This switch SW1 is operated in the timing as shown in the following illustration so that the contrast pulse is inserted in the horizontal blanking period. The switch SW1 outputs the video signal Ⓓ that has the contrast pulse inserted. This output signal is routed through the gain control buffer and then output to the C_A board. Amplitude of this output contrast pulse is sampled by the swtich SW2 and is then compared with the drive voltage V_{DRIVE} that is pre-set by the control unit located inside the drawer. The error voltage output from the comparator circuit becomes the control signal of the GAIN CONTROL. The gain control operation is performed until the contrast pulse amplitude is equal to that of the V_{DRIVE} signal. The gain is V_{DRIVE}, V_{CONT}. If either the V_{DRIVE} is multiplied by n times or the V_{CONT} is multiplied by (1/n), the output signal is multiplied by times n. The V_{CONT} is adjusted by the front panel CONTRAST control and the V_{DRIVE} is adjusted by the control unit.

The relationship between the input signal and the output signal (Ⓓand Ⓔin the block diagram) of the GAIN CONTROL, when the Contrast and the Drive are adjusted, is shown in the illustration.

The (a) and (b) show the case when the V_{CONT} is multiplied by n times while the V_{DRIVE} is kept constant. The (c) and (d) show the case when the V_{DRIVE} is multiplied by n times while the V_{CONT} is kept constant.

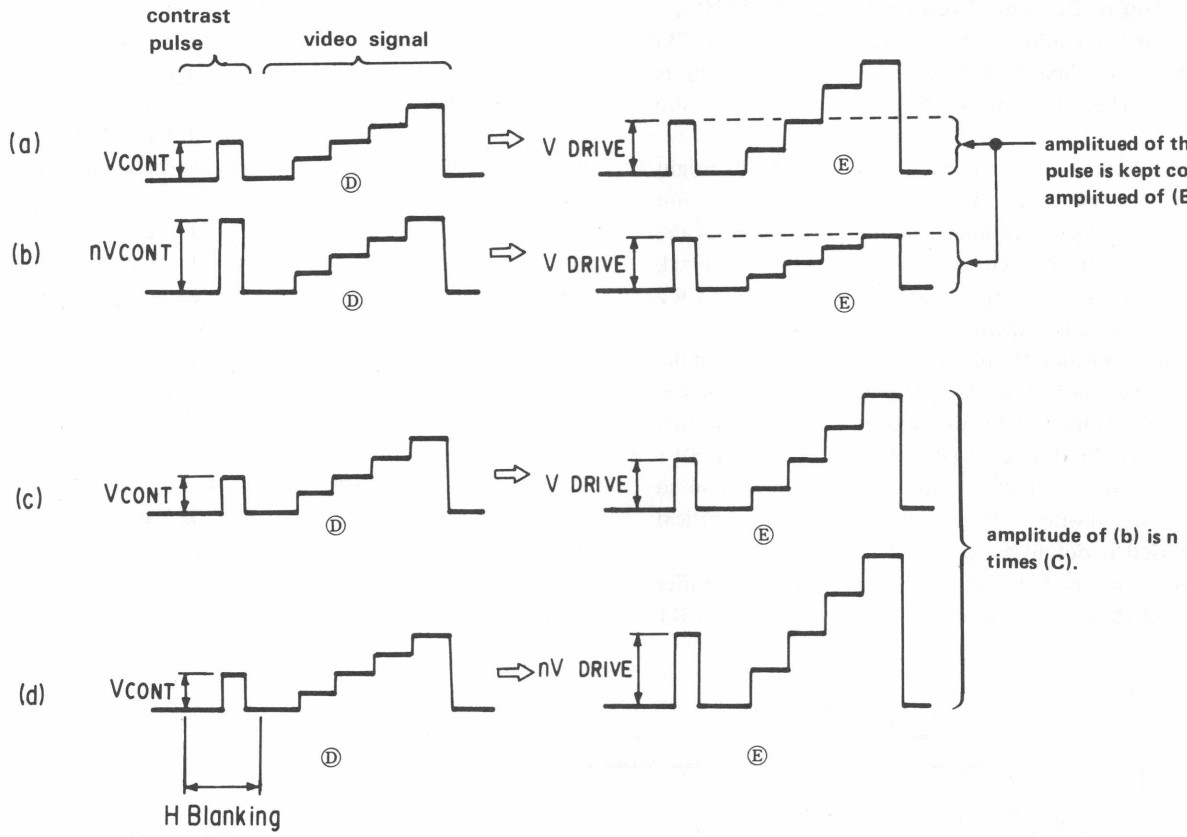
contrast pulse
video signal
(a)
VCONT
Ⓓ
V DRIVE
Ⓔ
amplitued of the contrast pulse is kept constant. amplitued of (B) in times (a)
(b)
nVCONT
Ⓓ
V DRIVE
Ⓔ
(c)
VCONT
Ⓓ
V DRIVE
Ⓔ
amplitude of (b) is n times (C).
(d)
VCONT
Ⓓ
nV DRIVE
Ⓔ
H Blanking

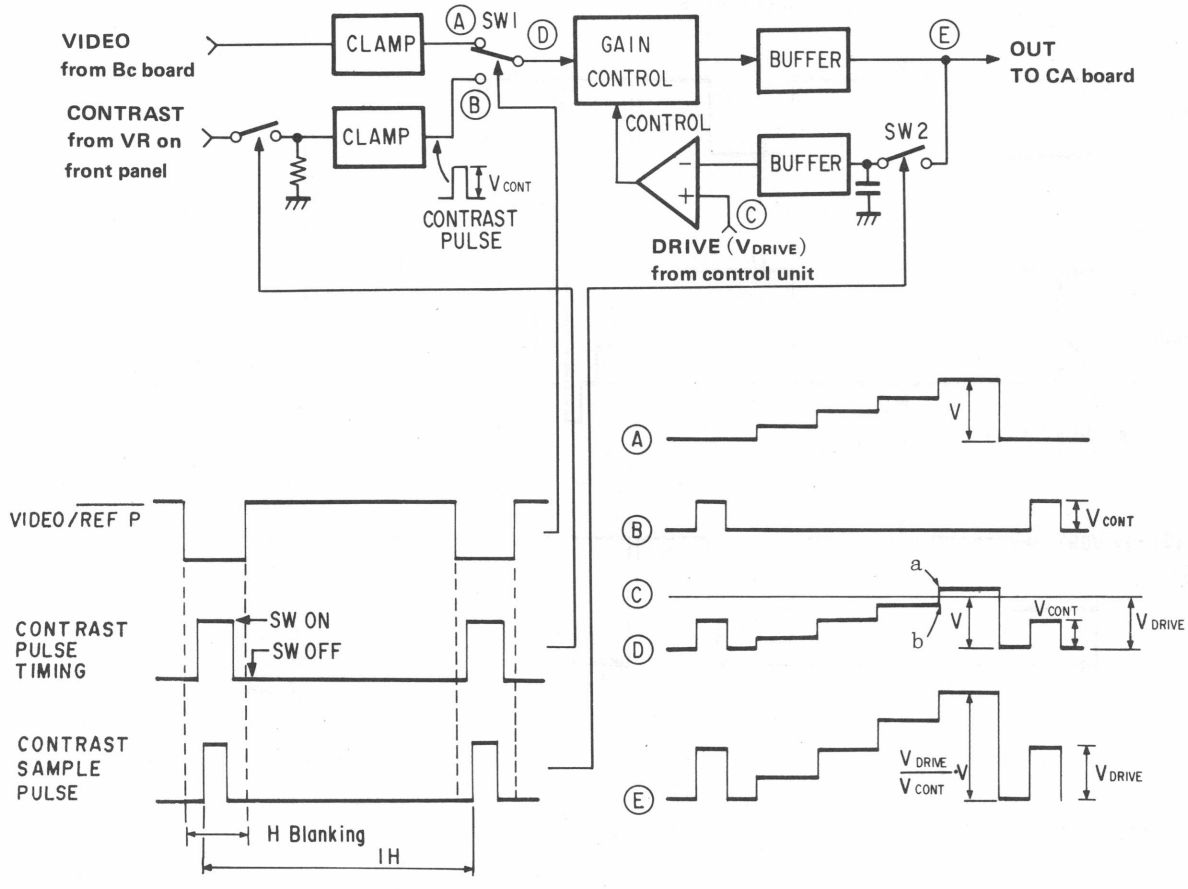
VIDEO from Bc board
CLAMP
Ⓐ SW1
Ⓓ
GAIN CONTROL
BUFFER
Ⓔ
OUT TO CA board
CONTRAST from VR on front panel
CLAMP
Ⓑ
VCONT
CONTRAST PULSE
CONTROL
BUFFER
SW2
Ⓒ
DRIVE (VDRIVE) from control unit
VIDEO/REF P
CONTRAST PULSE TIMING
SW ON
SW OFF
CONTRAST SAMPLE PULSE
H Blanking
1H
Ⓐ
V
Ⓑ
VCONT
Ⓒ
a
b
V
VCONT
VDRIVE
Ⓓ
Ⓔ
VDRIVE / VCONT · V
VDRIVE

Bias and Bright Control Circuit (BG, CA BOARD)

The Bias and Bright control operations are performed in the B_G board and the C_A board. Respective circuit description is discussed later. Here the Bias and Bright control methods are described.

The Bias and Bright controls are performed by using the bright pulse that is inserted during the vertical blanking period, and finally by controlling the cathode current. This system of the bias and bright control circuit removes change in the black balance that is due to the temperature drift of circuits and CRT or due to change with elapsed time.

The bright pulse is generated in the B_G board. Amplitude of the bright pulse is determined by the front panel BRIGHT control. The bright pulse is mixtured with the contrast pulse, and then are input to the B_D board's switch SW1. The switch SW1 performs switching as shown in the following illustration so that the video signal with the bright pulse inserted in the vertical blanking period is output as Ⓓ in the illustration.

This video signal is buffered by the gain control buffer amplifier, and then output from Q1/Q2 that drive the CRT cathode. The switch SW3 is turned on during the bright pulse period. During the SW3 on period, Q1 is cut-off so that the cathode current Ik which is proportional to the bright pulse amplitude, flows through Q2 collector. This current Ik is converted by a resistor to voltage signal that is sample-held by the switch SW4. The voltage difference between this voltage (Ik.R) and the V_{BIAS} is amplified and sent to the CRT's G1 in order to control the Ik. When the (Ik.R)is bigger than V_{BIAS}, the G1 voltage decreases to reduce the Ik. This feedback loop operates in this manner until the stable state of $(Ik.R)=B_{BIAS}$ is established. As long as the B_{BIAS} is of constant value, the Ik which is the brightness of the CRT is kept constant.

Brightness of the CRT can be controlled by changing the amplitude of the bright pulse. As the front panel BRIGHT control is turned from B_{BRT} as shown in the following illustration to V_{BRT} + delta V_{BRT} as shown in b in the following illustration, the monitor screen is darkened.

The bias adjustment is done by changing the V (Ik).
(Since $Ik=V_{BIAS}/R$, the Ik can be controlled by V_{BIAS}.)

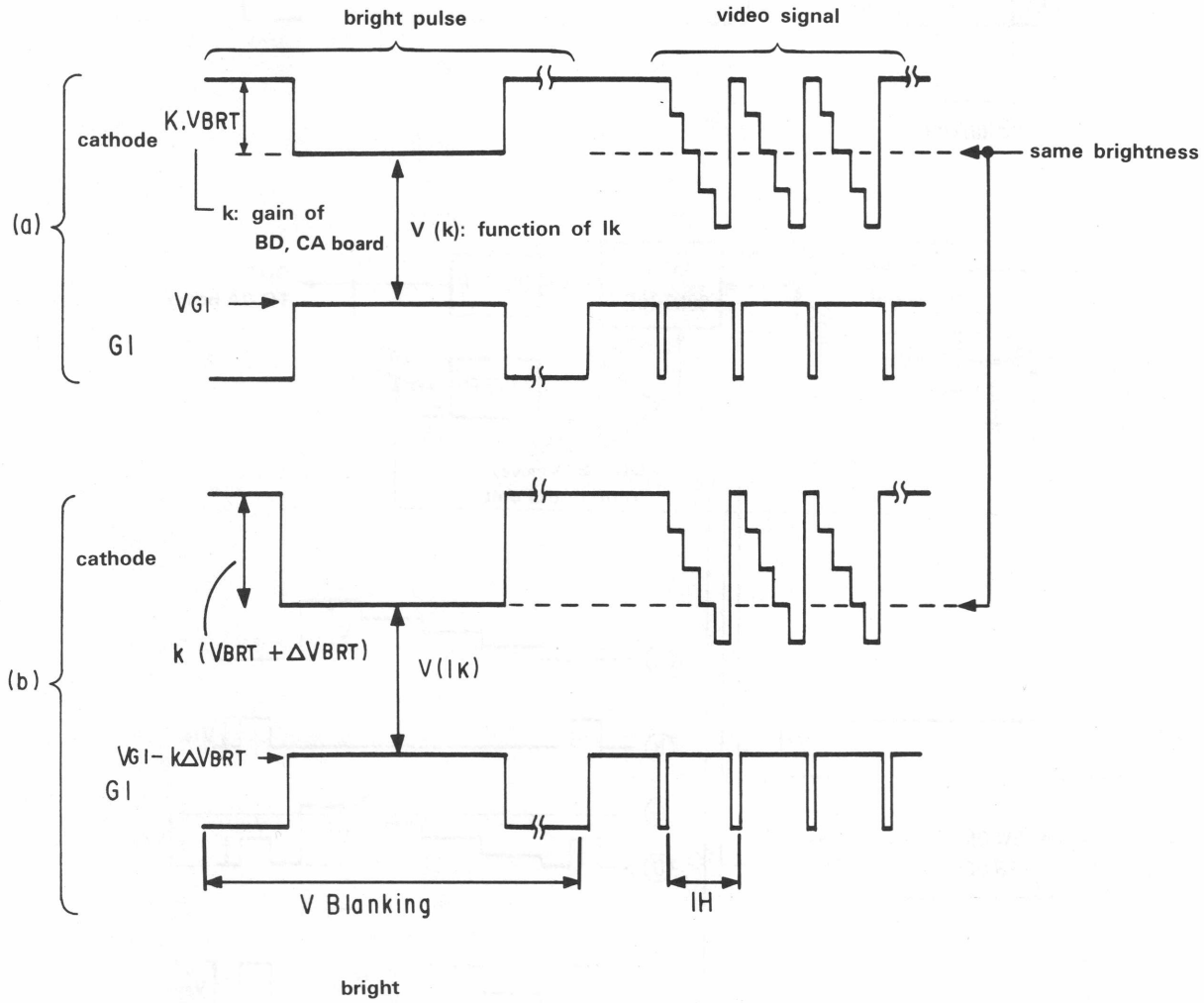

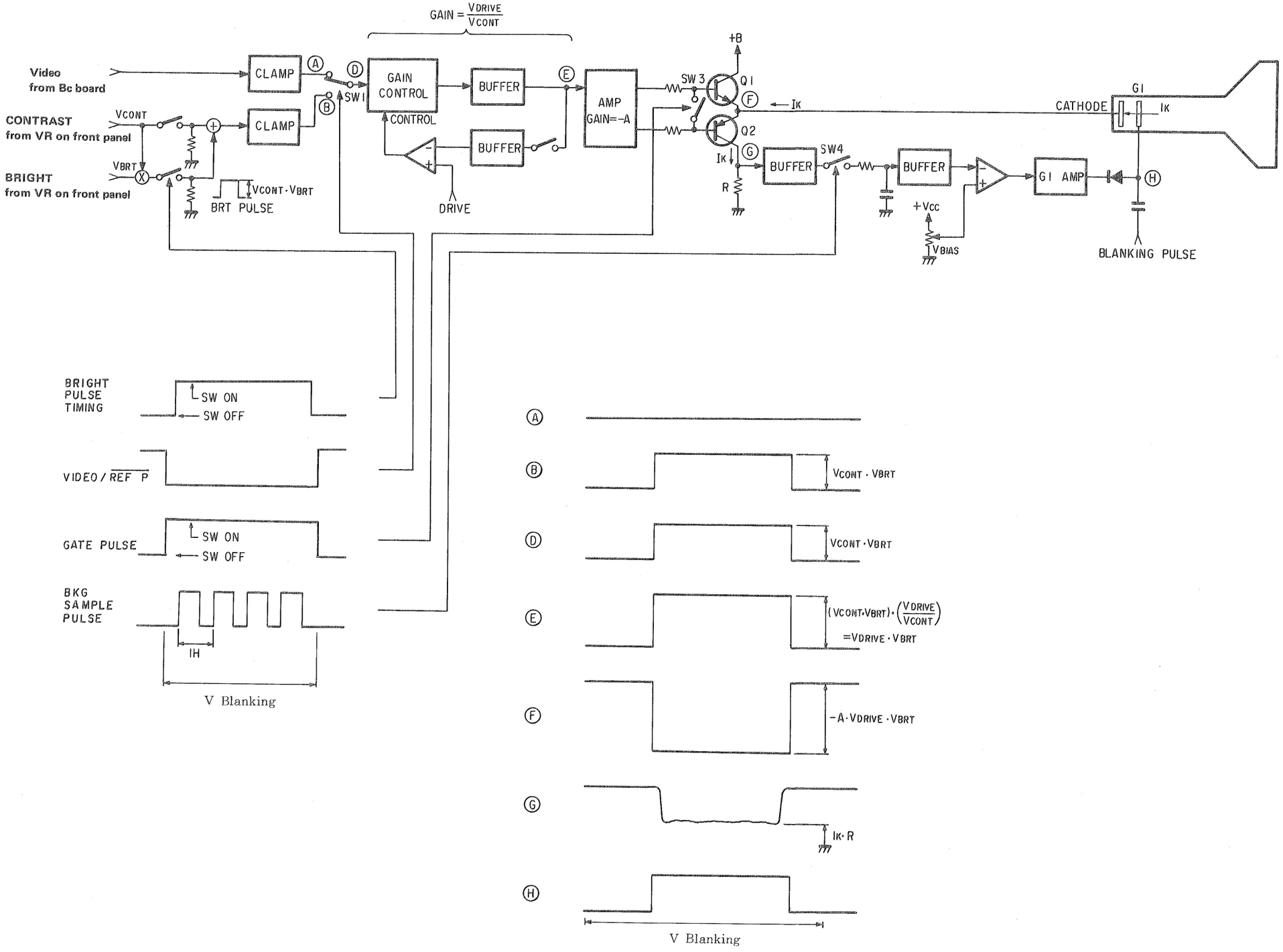
GAIN = VDRIVE / VCONT
Video
from Bc board
CONTRAST
from VR on front panel
BRIGHT
from VR on front panel
VCONT
VBRT
CLAMP
CLAMP
SW1
GAIN
CONTROL
CONTROL
BUFFER
BUFFER
DRIVE
BRT PULSE
VCONT·VBRT
AMP
GAIN=-A
+B
SW3
Q1
Q2
IK
R
BUFFER
SW4
BUFFER
+VCC
VBIAS
G1 AMP
G1
CATHODE
IK
BLANKING PULSE
BRIGHT
PULSE
TIMING
SW ON
SW OFF
VIDEO / REF P
GATE PULSE
SW ON
SW OFF
BKG
SAMPLE
PULSE
1H
V Blanking
A
B
VCONT · VBRT
D
VCONT·VBRT
E
(VCONT·VBRT)·(VDRIVE/VCONT)
=VDRIVE·VBRT
F
-A·VDRIVE·VBRT
G
IK·R
H
V Blanking

FLOATING TYPE INPUT BUFFER (QA, QB, QC BOARD)

The captioned three circuit boards are connected to the BNC input connectors, having the input buffer function.
These three boards receives power supply from the BA board. As input signal is selected by the INPUT A, B select switch, etc., the selected circuit board alone receives power supply while the other circuit boards receive no power as power is turned off by the input selector switch.

R, G, B, EXT SYNC channels' Input Buffer

The input buffer circuit comprises the input stage Q1, Q2, the cascode connected high gain amplifier Q3, Q4 and the emitter follower. The negative feedback is applied to form the wide band-width amplifier.

Input Stage

The input signal (v1+vc) is applied to Q1 emitter through R1 while the ground (vc) of the input signal is connected to Q1 base. This circuit configuration can remove the common mode noise of the input signal. The output signal (v2) from the output buffer is fed back to Q2 base. Gain is shown in the equation 1 .

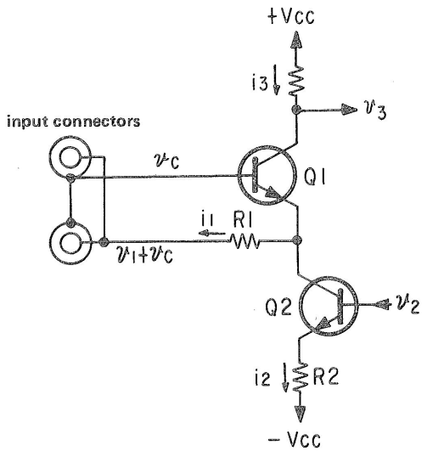

$$i_1=\frac{v_C-(v_1+v_C)}{R_1}=-\frac{v_1}{R_1}$$

The voltage across R1 becomes V1.
(Vc is removed.)

$$i_2=\frac{v_C}{R_2}$$

$$i_3=i_1+i_2$$

$$v_3=-i_3R_3$$

$$=\frac{R_3}{R_1}v_1-\frac{R_3}{R_2}v_2 \quad \cdots\cdots ①$$

High gain amplifier

The input signal v3 is input to Q3 base. Output is obtained from Q4 collector.
Gain of this stage is shown in equations ②, ③ .

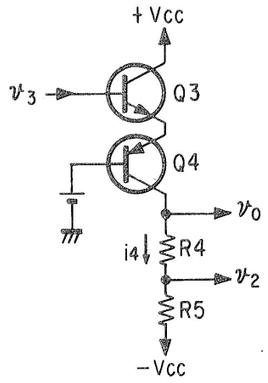

If the emitter resistors of Q3, Q4 are "re",

$$re=\frac{kT}{q}\frac{1}{I_C}=\frac{26\times10^{-3}}{I_C}\ (\Omega)$$

$$i_4=\frac{v_3}{2re}$$

$$v_0=i_4(R_4+R_5)$$

$$=\frac{R_4+R_5}{2re}\cdot v_3 \quad \cdots\cdots ②$$

$$v_2=\frac{R_5}{2re}\ v_3 \quad \cdots\cdots ③$$

Output Buffer's total gain

The v2 and v3 are removed from the above calculated equations ①, ② , ③.

$$v_0=\frac{R_3}{R_1}\frac{R_4+R_5}{2re+\frac{R_3}{R_2}\cdot R_5}v_1$$

$$=\frac{R_2}{R_1}\left(1+\frac{R_4}{R_5}\right)\cdot v_1 \quad (\because 2re\ll\frac{R_3}{R_2}\cdot R_5)$$

Since R1=13 kohms, R2=4.7 kohms, R4=2.2 kohms and R5= 1 kohms, the gain is unity (=1) gain.

HD, and VD channels' Input Buffer

The input buffer consists of the input stage Q5 and an emitter follower.
Following is the description on the input stage.

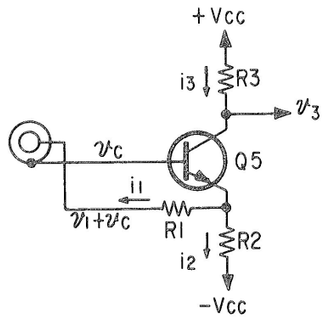

$$i_1=\frac{v_C-(v_1+v_C)}{R_1}=-\frac{v_1}{R_1}$$

$$i_2=\frac{v_C}{R_2}$$

$$i_3=i_1+i_2$$

$$v_3=-i_3R_3$$

$$=\frac{R_3}{R_1}v_1-\frac{R_3}{R_2}v_C$$

$$=\frac{R_3}{R_1}v_1 \quad (\because R_3\ll R_2)$$

Since R1=680 ohms and R2=1.5 kohms, the gain is 2.2 times.

INPUT SIGNAL SELECTION (BA BOARD)

The BA board has function of selecting the input signal and also the power supply control for QA, QB, and QC boards.
The A-channel video signals (R/CW, G/Y, and B/CN) from the QA board and the B-channel video signals (ditto) from the QB board are input to IC101/IC102/IC103 (LA7016) where either A-channel or B-channel is selected. The selected output video signal from these switching ICs, is buffered by Q101, Q102, Q103, is output from the BA board and is input to the BB board.
The EXT SYNC input is at the same time routed from the QC board, is fed to the one input of the video switch IC202, while the other input of this video switch IC202 is receiving the G/Y signal from Q102. Selection of either SYNC INT/EXT is performed by this video switch IC202. The selected output sync signal is buffered by Q203, and is input to the BF board (SYNC PROCESS).
The HD and VD signals from QC board are clamped by D201/D203, buffered by Q201/Q202 and are input to the BF board.

Power Supply Circuit for QA, QB, and QC Boards

The power supply circuit for QA board is composed by IC305/Q301/Q302. The power supply circuit for QB board is composed by IC306/Q303/Q304. The power supply circuit for QC board is composed by IC307/Q306/Q307. The original power suppy the these respective power supplies, is the ±9V tracking power supply whose output can be turned OFF by grounding the IC's ⑧ pin. Therefore the B-channel power can be turned off while the A-channel is selected. The A-channel power can also be turned off while the B-channel is selected in the same manner. When the internal TEST signal is selected. all the power supplies to QA, QB, and QC boards are turned off.

YPBPR SIGNAL PROCESS, AND GBR APERTURE CONTROL CIRCUIT (BB BOARD)

GBR/YPBPR selection, YPBPR to GBR conversion, and aperture control.

Major circuit blocks are the YPBPR signal process circuit and the GBR aperture control circuit.

IC6, IC7, IC8 (LA7016) are the GBR/YPBPR select switch. When YPBPR input is selected, input signals are routed through the YPBPR signal process circuits and are then input to the GBR aperture control circuit. When the GBR input is selected, input signals are directly applied to the GBR aperture control circuit. When YPBPR input is selected, the YPBPR signals are fed to the analog switches of IC1, IC3 that is the switch in order to separate the PR and the PB signals in the B&W mode. The Y signal is input to the analog switch of IC2 that is the selection switch of either internal TEST signal or the Y signal. Therefore, the TEST signal is input to the Y signal circuit in the YPBPR signal process circuit in place of the Y signal. These YPBPR signals are passed through respective analog switches and then fed to the YCWCN to GBR conversion matrix circuit. Its output GBR signals are fed to the selector switches of IC6, IC7, IC8 ⑦ pins where either the matrix output GBR or the direct input GBR are selected. The output signals are routed to the GBR aperture control circuits and to the COLOR/B&W select switches, and then fed to the output.

YPBPR to GBR Conversion Matrix Circuit

This conversion is performed in order to realize the following equations.

$$\begin{pmatrix} G \\ B \\ R \end{pmatrix} = \begin{pmatrix} 1 & -0.226 & -0.477 \\ 1 & 1.826 & 0 \\ 1 & 0 & 1.576 \end{pmatrix} \begin{pmatrix} Y \\ P_B \\ P_R \end{pmatrix} \quad \cdots ①$$

This conversion requires the addition of the video signals. The video signal adding is performed by the following circuit.

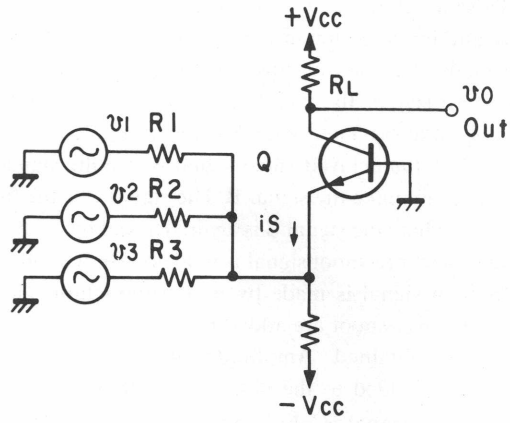

Now the video signals v1, v2, v3 are respectively multiplied by the coefficients K1, K2, K3, and are added together. That is:

$$v_O = K1v1 + K2v2 + K3v3 \cdots ②$$

The equation mentioned above can be obtained.

Assuming that the emitter resistence "Re" of the transistor "Q" whose base has been grounded in the Fig. is exceedingly small as with R1, R2, and R3, the signal current "is" which flows to the emitter of "Q".

$$i_S = \frac{v1}{R1} + \frac{v2}{R2} + \frac{v3}{R3} \cdots ③$$

If hfe of the transistor Q is high enough, approximately the "is" CURRENT FLOWS IN THE Q's collector. So, output from the collector is the voltage "vo":

$$v_O = R_L i_S = \frac{R_L}{R1} v1 + \frac{R_L}{R2} v2 + \frac{R_L}{R3} v3 \cdots\cdots ④$$

Therefore the above described coefficients are:

$$K1 = \frac{R_L}{R1}, \quad K2 = \frac{R_L}{R2}, \quad K3 = \frac{R_L}{R3} \cdots\cdots ⑤$$

Followings are the description using the actual circuit. The PB signal is buffered by Q1, Q2, the Y signal is buffered by Q9, Q10 and the CN signal is buffered by Q17/Q18 respectively and are routed to the matrix circuits. Since the PB signal and the PR signals are having negative coefficient as shown in equation 1, polarity inversion is needed. The polarity inversion is performed by IC4 and IC5 (BX1190). The matrix is performed by Q3, Q11, Q19. The matrix output GBR signals at respective collectors are routed to the emitter followers of Q4, Q12, Q20, then to the level shift of D6, D12, D15, and are finally output.

Aperture Control Circuit

This circuit is adding pre-shoot and over-shoot to edge signal of the video image. Therefore, edge signal is emphasized by this circuit. This circuit uses delay lines in order to generate the edge signal by addtion/subtraction operation among the delay line output signals. The output edge signal is then added to the original video signal. Its operating principle is shown in the following illustration. The signal A is the original video signal. The signal B is the delayed video signal where the signal A is delayed by "τ" to make the signal B. The signal C is the further delayd signal where the signal B is again delayed by "τ" to make the signal C. The pre-shoot signal is made by B−A subtraction. The over-shoot signal is made by B−C subtraction. The pre-shoot and the over-shoot are added to make the edge signal of 2B−(A+C) is obtained. Amplitude of this edge signal is adjusted and is added to the video signal B. Then the edge-corrected video signal is obtained. This is the fundamental idea of the aperture control operation.

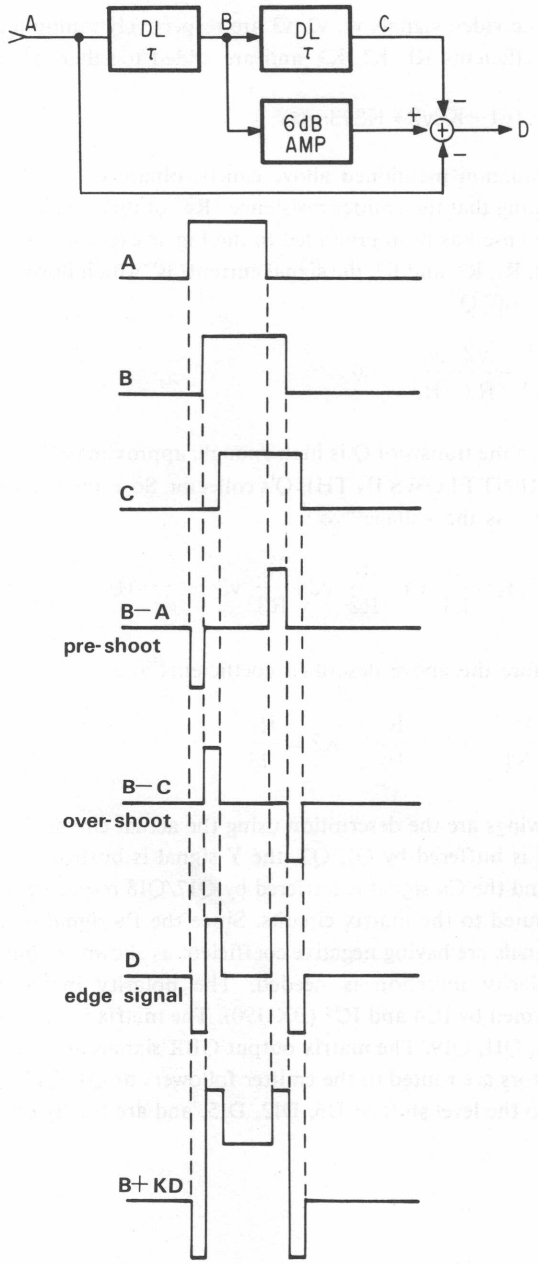

Frequency response of this aperture correction circuit is obtained as follows. When the sinusodial wave signal (Esin2πft) is input,

$$D=-E\sin 2\pi ft=2E\sin 2\pi f\,(t-\tau)-E\sin 2\pi f\,(t-2\tau)$$
$$=2E\,(1-\cos 2\pi f\tau)\,\sin 2\pi f\,(t-\tau)$$

Therefore the output is the delayed signal of the input signal by "τ", having the gain of 2E (1−cos2πfτ).
The frequency whereby the gain becomes maximum is written into the following equation,

$$\cos 2\pi f\tau=-1$$

from the above, it becomes $f=\frac{1}{2\tau}$

Since the delay line of τ=20 ns is used, it becomes a 25 MHz MAX aperture circuit.
The frequency response of D is shown in Fig. below.

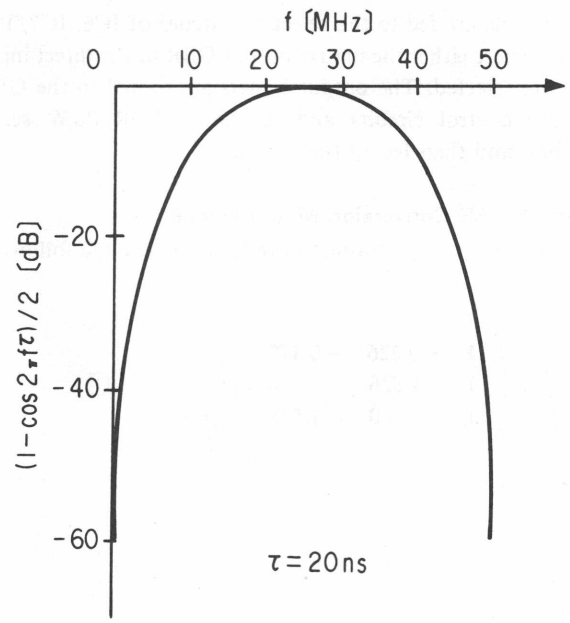

The aperture control circuit in the Bb board is to generate the edge correction signal for the **G, B, R** signals. The method to generate the edge signal is as follows. Y signal is first generated from the **GBR** signals by matrixing them. The Y signal is fed to the edge signal generating circuit where the edge signal is generated for the Y signal. This edge signal is gain-controlled and is distributed to respective **G, B, R** signals.
Following is the circuit description referring actual circuit. The resistor matrix network is located in the emitter circuit of the common-base transistor Q25. As the kRGB signals are fed to this matrix network, the Y output signal is output from Q25 collector. This Y signal output is passed through emitter follower Q26, level shifter D19, and is output from emitter follower Q27. This Y signal output is again buffered by Q28, 20ns delayed by the delay line DL4. It is again buffered by Q29/Q30 and 20ns delayed by DL5.

The afore-mentioned A, B, C signals are thus generated. Addition and subtraction of these three A, B, C signals are performed by Q36. The output is obtained from Q36 collector in the form of electric current. This current output is routed to differential amplifier of Q32, Q33 common emitter circuit so that the amplification gain controlled by the voltage difference between the bases of Q32 and Q33. Its output is taken from Q33 collector, amplified by Q34, buffered by emitter follower Q35. This edge signal output is added to the G, B, R signals respectively. The B&W signal for use in the B&W mode is also obtained from the emitter of Q30 in this circuit. Since edge signal generation and its gain controlling circuit provide some delay, the Y signal is delayed by the delay line DL6, and is sent to the COLOR/B&W select switch IC9, IC10, IC11 (LA7016).

The G, B, R signals are at the same time, delayed by the delay lines DL1, DL2, DL3 respectively. These delay lines have the equivalent delay time as that of DL4 + DL6 respectively. The delayed G, B, R signals are applied to the COLOR/B&W select switch where the select switch output and the afore-mentioned gain-controlled edge signal are mixed in the emitter circuits of the common base mixers Q7, Q15 and Q23. The mixed outputs are obtained from their collectors, buffered by Q8, Q16, Q24, and level-shifted by D10, D14, D17 and are output.

This is the aperture control for the RGB signals.

CONTRAST AND GAIN (DRIVE) CONTROL CIRCUIT (B_D) BOARD

Following is the discussion regarding R channel only. The Grand B channels operates in exactly same manner.

Back Porch Clamp Circuit

This circuit is composed of Q101 through Q105 which is amplifier with the dc level-shift function. Gain is obtained as the following equation.

$$\frac{R107}{R103//R104} \cdot \frac{R111}{R109}$$

Gain is approximately 1.4 times.

The DC level shift can be done by adding any DC signal to Q104 base.

IC101 is a comparator as shown in the following illustration, which is the SONY BX-1313 type comparator equipped with a sample-and-hold circuit. Input signal is feed to pin-⑧ which is sampled as long as the sampling pulse at pin-⑨ is HIGH. The sampled voltage is held at pin-⑦ until next sampling pulse is input.

The sampled voltage at pin-⑦ is compared with the reference voltage input Vref signal at pin-④. If the V is higher than Vref, the LOW level is output. If the V is lower than Vref, HIGH level is output.

This IC101 functions as a clamp circuit too. If a back porch clamp pulse is input to the pin-⑨, and if pin-③ is connected to Q104 base, then the Q105 emitter output's back porch is clamped to the Vref level. the Vref signal and the back porch clamp pulse are sent from the B_G board. During the Delay mode operation, the Vref is increased and the pedestal level is also increased.

The capacitor C107 is determining the calmp time constant.

approximate circuit diagram of IC101 (BX-1313)

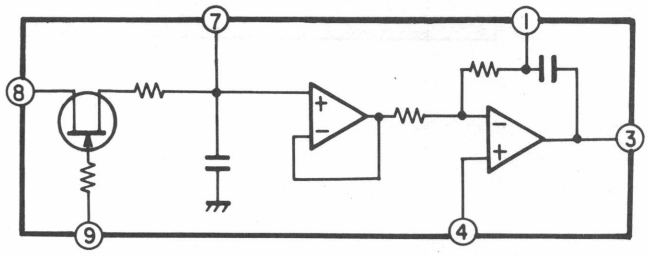

VIDEO/REFERENCE PULSE Select Switch

IC102 (LA7016) is the analog switch that receives the clamped video signal input to pin-② while the clamped reference pulse is input to pin-⑦. The reference pulse is the mixtured pulse of the bright pulse and the contrast pulse at the B_G board. Its pin-③ is receiving the selection control signal for this analog switch. By this pin-③ signal, the switch is set to the pin-⑦ as long as the reference pulse is present. Therefore, the video signal with the reference pulse inserted, is output from the IC102 pin-④.

RGB ON/OFF Circuit

When the control unit's RGB ON/OFF switch selects the OFF position, cathode receives no signal and the G1 potential is also decreased. The G1 potential is controlled by CA board. This OFF signal of the RGB ON/OFF switch removes the video signal at the BD board as this signal is input to Q108 base. For example, If this switch is set to the R OFF position, Q108 is turned ON that put IC102-③ pin LOW to connect the IC102 input to the ⑦ -pin so that the video signal at ② -pin is not output.

CONTRAST/GAIN Control Circuit and Pedestal Clamp Circuit

IC103, IC104, IC106, IC107 are constituting the CONTRAST/ IN control circuit and the pedestal clamp circuit.

The IC103 is a differential amplifier having the capability of DC level shift. If a variable resistor is connected between pin-⑤ and pin-⑧, the gain control becomes possible. If the pin-①'s DC level is changed, the level shift becomes possible.

IC103 (BX-1315) equivalent circuit

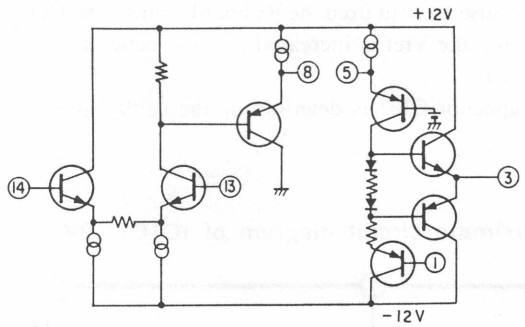

IC104 is used as a variable resistor connected in between pin-⑤ and pin-⑧. IC104 is a voltage-controlled variable resistor where V4, V6 are the control voltages. The resistance value (taken as R13) between pin-① and pin-③ can be changed by varying the voltages of V1-V6 and V3-V4. (V1-V6 is the potential of pin ① - pin ⑥.) V4 is controlled by the CONTRAST control and the GAIN control.

C119 is used to modulate the V6 with V1 until V1−V6= V3−V4=dc.

If C119 does not exist, V1-V6=ac is established so that R13 is modulated by V1, that results in waveform distortion.

Q106 is installed so that IC104-⑥ pin can follow the -④ pin change when the -④ pin voltage is changed.

Q106 is turned on during the blanking period.

IC106 samples the CONTRAST pulse and is controlling the resistance value of IC104. It receives the Contrast pulse's sampling pulse at pin-⑨ that has the same timing as the CONTRAST pulse. It receives the video signal with the CONTRAST pulse inserted, at pin-⑧ so that it samples and holds the CONTRAST pulse's "level V". The sampled "level V" is compared with the reference voltage "Vref" that is input at pin-④. If the level V is higher than Vref, the LOW level is output. If the level V is lower than Vref, the HIGH level is output from pin-③. This output is routed to Q107 base, inverted by Q107 collector, and is input to IC104-④ pin. Therefore, If level V is higher than Vref, the IC104-④ pin becomes HIGH level that increases the IC104 resistance value that decreases IC103 gain to make the level V lower until level V = Vref is established. Thus, the CONTRAST pulse has feed-back loop so that it maintains the constant amplitude even though IC103, IC104, IC105 have drift.

IC106 is the pedestal clamp IC. Its operation is same as that of afore-mentioned IC101 clamp circuit.

Buffer Amplifier

IC105 is the video amplifier having approximately 30 times open-loop gain. It outputs signal to the CA board with 75 ohms.

INTERNAL SIGNAL GENERATORS (BE BOARD)

Clock Oscillator : X1, IC1(4A), IC2(4B)

Approximate 48 MHZ is oscillated by IC1(4A), IC2(4B). It is divided by 4 with IC2(4B) to obtain apprximate 12 MHz that is the system clock.

Horizontal rate signal generator : IC3(2C), IC4(3C), IC5(4C), IC6(3D), IC7(3E)

IC3, IC4, IC5 are the hexadecimal dividers that generates the 9 bit digital data (from 0 to 362 count at 1H) that is supplied to IC6 as the address data. The timing data of eight signals such as $2f_H$, H.SYNC, B1, H.HATCH, G1, G2, LATCH CLK, and CLEAR are memorized and located in IC6. The memory page is switched by the system A and B signals input to pins-㉕ and -㉖ of BE-1, selecting one among four timings.

Vertical Rate Signal Generator : IC8(1F), IC9(2F), IC10(2E), IC11(1E), IC12(1J), IC13(2J)

The $2f_H$ signal is used as the clock pulse that is divided by 1125 times. As the timing is determined by the clock input, the vertical rate signals such as V.SYNC, B2, V.SYNC', V.HATCH, G3, G4, G5, and CLEAR are output. G3, G4, G5 are latched by the H. SYNC signal.

H. and V. Pattern Signal Generator : IC15(1E), IC16(1D), IC17(1C), Q7

The signals such as B1, G1, G2, B2, G3, G4, G5, CONT-A/CONT-B are input and are used to determine the output video signal amplitude and generat the video signals such as "SET UP", "FLAT FIELD" and "GRY SCALE". The video signal amplitude (D/A convertor) is determined by the constance current source Q7, resistor array and open collector array.

HATCH Signal Generator : IC21(2D), IC23-¼ (3J-¼), Q6

The H.HATCH signal is determined to have approximate 35ns pulse width by R15, C15 that is mixed with the V. HATCH signal. The mixed signals are sent to Q6 base. If the HATCH signal is selected to be output, the FLAT FIELD is also automatically selected so that these two signals are mixed by Q6 to generate the HATCH signal.

SYNC Signal Generator

Receiving the afore-mentioned H.SYNC, V.SYNC, and V.SYNC" timing signals, the specified output signals of H.SYNC, V.SYNC, and COMPOSITE SYNC are generated.
The H.SYNC and V.SYNC signals are output by the invertor/ open collector to be pulled up the ⊕ power supply. The COMP SYNC is output through buffers Q8 and Q9.

Video Buffer : Q4, Q5

The afore-mentioned H.V pattern signal and the hatch signals are output through Q4, Q5 with 75 ohms.

Invertor, Dot Signal Generator and Brightness Control: IC23(3J), IC24(4H), IC25(4G), IC26(4F)

As receiving the external command input, brightness control of the output video signal, invertion of the hatch signal, generation of the dot signal are performed.
When the external command input is OPEN, all operations are set to NORMAL.

Generation of the PLUGE Signal (IC27, Q14 and Q15)

The PLUGE signal is superposed to the video signal generated by IC17 and output. When the PLUGE signal is set, the black signal data is output from IC17. When the PLUGE signal is not set, its output is inhibited by the signal from ④-pin of BE-14.

INPUT/TEST Control : Q1 through Q3

When external command input is input that enables external video input is allowed or TEST signal is allowed, the +5V power line is turned off. It is because that the external input video signal and the internally generated signal from the BE board will not make interference each other.

SYNC PROCESS CIRCUIT (BF BOARD)

Sync Separator Circuit having Sync AGC Function

In order to establish the AGC circuit using input sync signal as the reference signal, an amplifier that can detect and control the amplification gain and dc level is necessary.
Fundamental circuit is shown in the following illustration.
The sync signal is amplified by the GAIN CONTROL & LEVEL SHIFT amplifier that provides the inverted output to each of the comparators of COMP-1, -2, -3. The comparator COMP-1 provides output so that the sync tip's dc level becomes E1 as shown in the illustration. The other comparator COMP-3 provides the GAIN CONTROL signal so that the output pedestal portion has the E3 level. These control signals are fed back to the GAIN CONTROL & LEVEL SHIFT amplifier so that the comparator COMP-2 provides the composite sync signal having the specified sync amplitude and dc level.

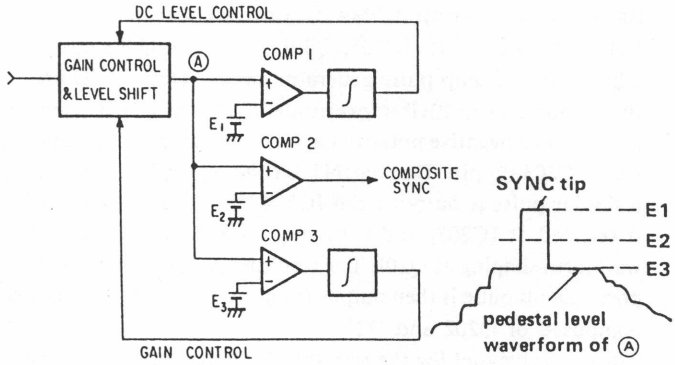

The GAIN CONTROL & LEVEL SHIFT circuit is consisted by the IC102, Q108, Q109 and Q110. The gain control is done by IC102 MC1496 double balanced type differential amplifier. Its output is the current output that is input to Q108 common base amplifier's emitter.
It is fed then to Q109 common emitter amplifier where output is taken from its collector and sent to Q108 emitter through R141 for negative feed back.
Its output is buffered by Q110 emitter follower.
The DC level control is performed by changing the DC current flowing into Q108 emitter.
In this SYNC AGC circuit, the SYNC tip is fixed by the DC level control while the pedestal level is determined by the gain control. The output signal from Q110 emitter is input to Q111 comparator where signal is integrated with shorter time constant in order to react to the SYNC tip. The signal is feed back by Q112 and Q113 emitter follower in order to clamp the sync tip potential to the Q111 base potential. This integrator has the shorter time constant for sync period while it is designed to have longer time constant for video period by D102, R158 in order to hold the sampled value during the video period.
The output signal from Q110 emitter is sent to Q115 comparator that is the integrator to react only to the pedestal portion, not to the SYNC portion, by having the long time constant. The signal is then feed back by Q117 emitter follower in order to clamp the pedestal level to the Q115 base potential by determining the gain control factor.
The SYNC top level and the pedestal level is thus fixed so that the SYNC signal amplitude is always constant. This signal is sent to Q115 comparator where sync signal alone is separated that is amplified by Q114, and output through complementary buffers of Q119 and Q120. The negative polarity sync is thus output.

Equalizing Pulse Extractor Circuit

IC104 (2/2) is an equalizing-pulse sampling circuit. A pulse with a amplitude approx. 3/4H is generated by the IC104 built-in monostable multivibrator, then its inverted output (IC104-⑨ pin) is fed back into the input IC104-⑪ pin, sampling the input equalizing pulse by masking it.

Back Porch Clamp Pulse Generator Circuit

IC103, IC203, IC204, IC205, Q201, Q202 and Q203 compose a back-porch clamp pulse generator circuit. During HD input, the monostable multivibrators inside IC103 and IC203 delay the phase, and a negative polarity back-porch clamp pulse is output from IC203-⑨ pin. During INT SYNC or EXT SYNC input, a similar pulse is output from IC204-⑨ pin. The clamp pulse is selected at IC205, and it undergoes polarity inversion and waveform shaping at Q201. The resulting positive polarity back-porch clamp pulse is then output from the complementary buffer composed of Q202 and Q203.
The control signal for the selector IC205 is sent from the sync signal detector circuit composed of IC205, IC206 and IC204. Even when the HD signal is being input, the clamp pulse is generated from the sync signal if it is output from the sync separator circuit.

V Sync Selector Circuit

Q304, Q305, Q306, IC201 (2/4) and IC301 compose a V sync switching circuit. IC301 switches between the HD, composite sync and test V sync signals.

H. SYNC Selector Circuit

IC105 is a H sync switching circuit. It outputs the HD signal when it is input, and the composite sync signal when it is not.

PULSE GENERATOR (BG BOARD)

Pulse Generator Circuit to generate BRIGHT Pulse

Timing Generator Circuit for Brightness Pulse and Related Pulses
The brightness pulse, BKG sample pulse, gate pulse and video/REFP pulse used by the previously explained (3-14) bias and brightness control circuit are generated at this circuit.
The timing of these pulses is as shown on fallowing the timing chart.
The H and V pulses generated at the deflection circuit (D board) are input to the CLK and CLR terminals of the counter composed of IC304 and IC305 to produce these pulses.

BG BOARD TIMING CHART 1/2 (V BLANKING PERIOD)

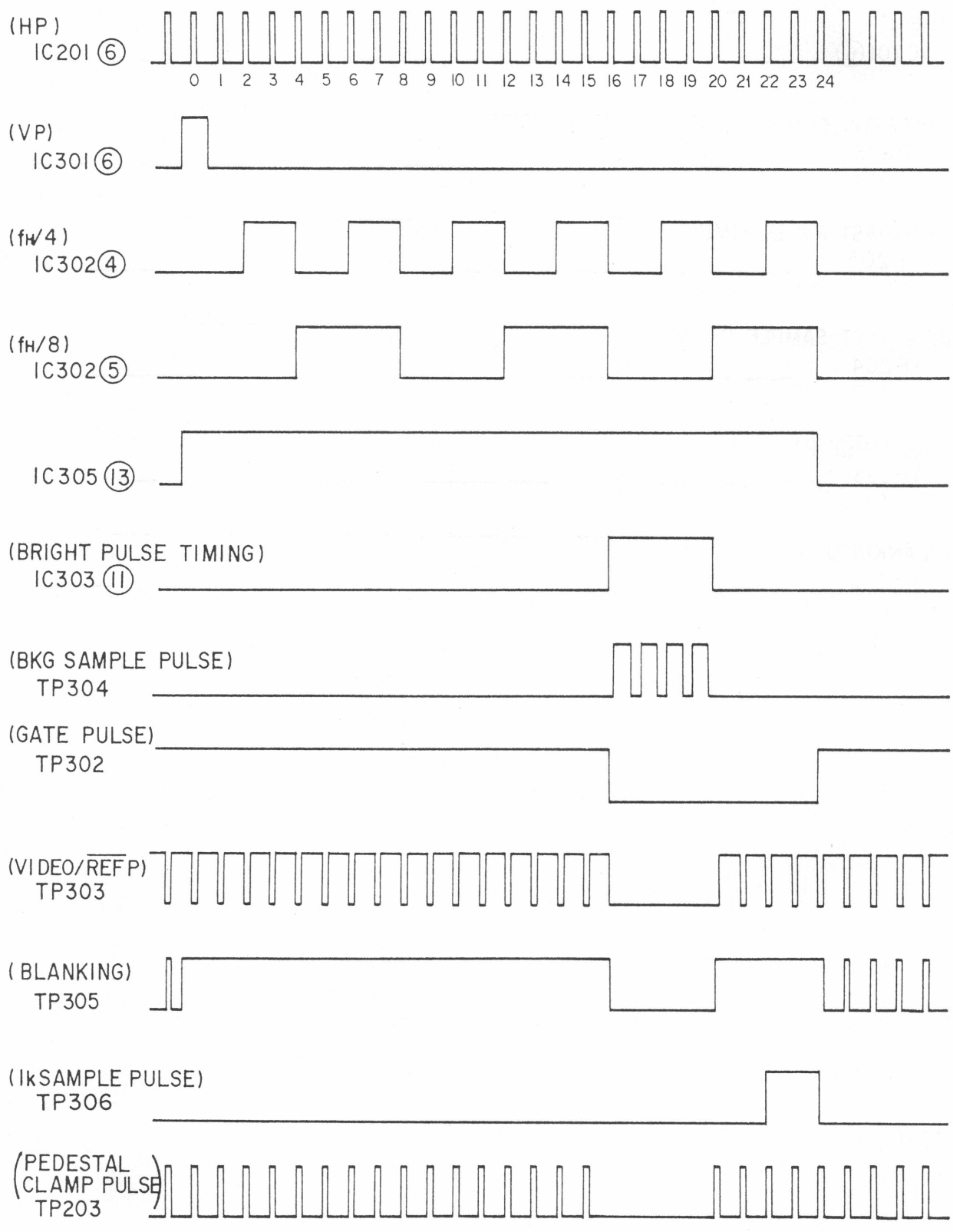

BG BOARD TIMING CHART 2/2 (H BLANKING PERIOD)

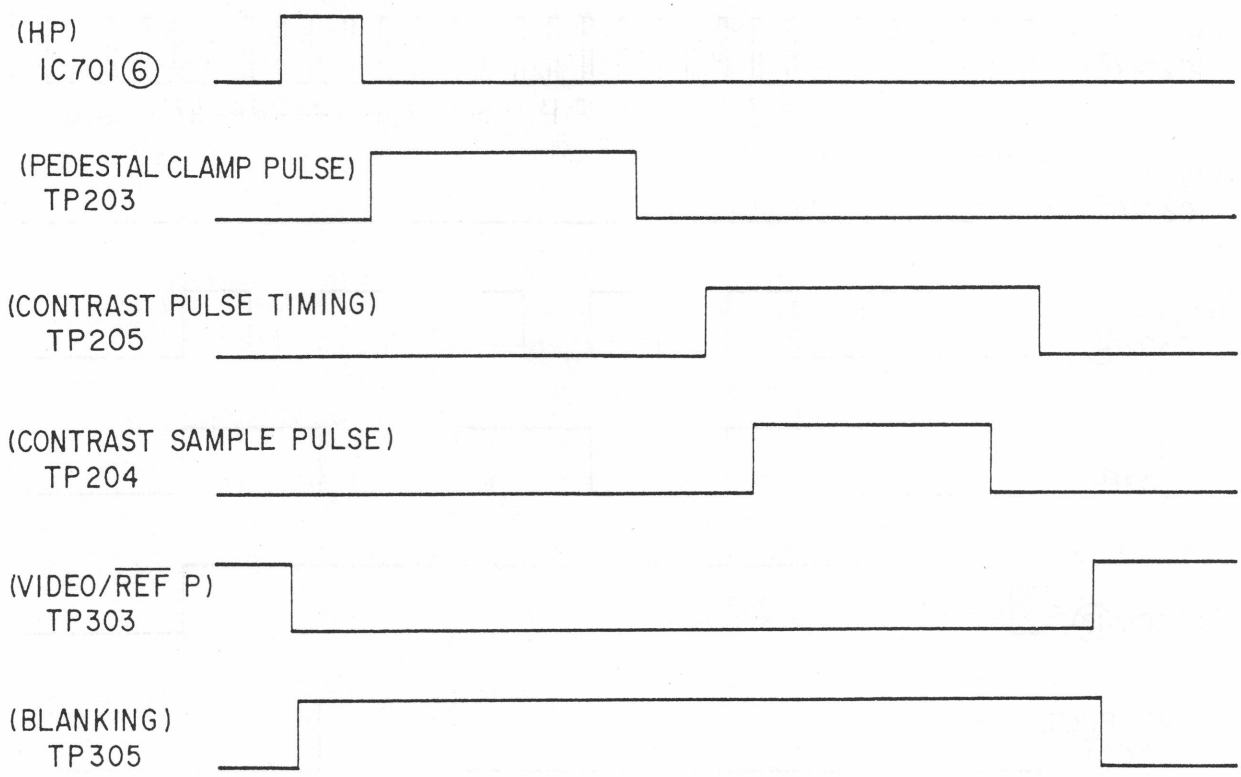

Timing Generator Circuit for Contrast Pulse and Related Pulses

The contrast pulse and contrast sample pulse used by the previously explained (3-12) gain and contrast control circuit are generated at this circuit.

The timing of these pulses is as shown on the following timing chart, They are generated from the H pulse generated at the deflection circuit (D board).

Reference Pulse Generator Circuit

The reference pulse is a combination of the brightness and contrast pulses. This pulse is superposed to the video signal at the BD board, then it is used at the bias and gain control circuit and the gain and contrast control circuit.

The brightness pulse amplitude can be changed with the brightness control on the front panel, and the contrast pulse amplitude with the contrast control.

Brightness and contrast control voltages are finally sent to the buffer inside IC102, and sampled by the above-mentioned brightness timing and contrast timing pulses at IC105 to become the brightness and contrast pulses.

These pulses are added by the adder composed of Q110 to Q113. The resulting pulse is clamped at the clamp circuit including Q115 to Q117 and IC103, then output as the reference pulse.

Delay Control Circuit

In the delay mode, this circuit increases contrast pulse amplitude and decreases brightness pulse amplitude. This results in less contrast and more brightness.

Clamp voltage of the BD board is also changed.

ABL Circuit

Q101 to Q104 compose a contrast ABL circuit.

It increases contrast pulse amplitude in case of a large ABL current.

VIDEO OUTPUT (CA board)

Since R, G, B, have the exactly equivalent circuits, the R channel alone is discussed.

Pre-amplifier

This circuit consists of differential amplifier and the same phase as input is output.

The gain of this amplifier is as follows.

R7/R4 = approx. ×2

VIDEO OUTPUT Circuit

This is a general cascode amplifier. Q2 is a bias circuit for buffers in the next stage and Q23 is DC current source for adjusting pedestal level bias of the video signal.

The gain of this amplifier as follows.

R18/R16 = approx. ×30

Q14, Q15 are the buffer amplifiers whose output is sent to CRT cathode via CB board.

Q10 through Q12 circuit is to cut-off Q14.

As Q13 base is set to LOW level, Q10 through Q12 are turned on to cut off Q14. Then Q15 collector current becomes the cathode current flowing from CA-9 terminal. The resistor R35 is installed in Q15 collector that detects the cathode current.

The gate pulse that turns on/off Q13 is supplied from BG board. This pulse has the same timing with the BRIGHT pulse. The resistor R35 detects the cathode current when the BRIGHT pulse is sent to cathode.

Blanking Circuit

G, B, R channels are controlling their respective G1 voltage independently.

The blanking pulse is sent from the deflection circuit and is waveshaped by Q601 though Q609 to produce the blanking pulse output having 120 Vp-p. This pulse is distributed to G, B, R respective G1 control circuits. The R channel G1 control circuit alone is discussed as follows. The G1 control signal is input to Q18 base. This voltage is amplified by Q18. Q19 cascode amplifier and output via Q20 buffer. D15, C24 are the clamp circuit that clamps the blanking pulses HIGH level (prepared by Q601, Q609) to VG1. This output is sent to CRT G1 via CB board. If the control unit (N board) R ON/OFF switch is turned OFF. Q18 base input becomes GND level potential. As Q18 base is set to GND level. Q19 is cut off to put G1 approx. −120V that cuts off beam.

Black Balance Stabilizing Circuit

IC2 and IC3 are the black balance stabilizing circuit that control the G1 voltage by detecting a cathode current for black balance constant. These circuit are already discussed in the Bias and Bright Control Circuit. Following is the description for the necessity of RV2.

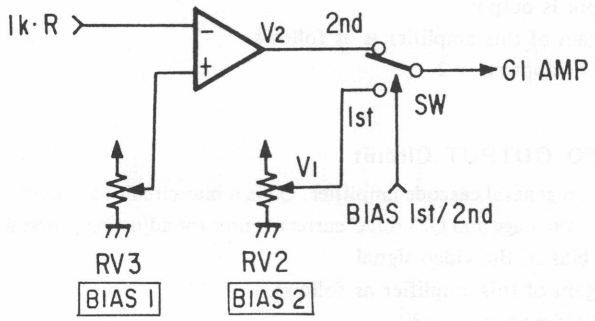

The RV2 is a potentiometer for facilitate adjustment of BIAS 2 and gain. When performing the adjustment using RV3 alone, the gain and the bias should be adjust alternately as follows.
Assuming that the conditions may have the same amplitude and the same $V_{K\text{-}G1}$ among RGB channels, as shown in fig. (a). B channel is omitted in fig. (a). As fig. (a)is showing the R channel has higher gain and bias so that it is attempted to adjust the color temperature until fig. (d)condition is obtained. First, the R bias adjustment is made by RV3 as shown in fig. (b), and perform the R-gain adjustment as shown in fig. (c). Since the black balance stabilizing circuit is operating to maintain the bright pulse amplitude as constant value, the bright pulse's $V_{K\text{-}G1}(=V_R'')$is not affected even if the amplitude is decreasing by turning the R-gain adjustment, so that the amplitude of the black level and the white level is affected centering around V_R''. Therefore, when the black balance stabilizing circuit is operated, it is necessary to perform the off-set adjustment (bias adjustment) in fig. (b) and the amplitude adjustment (gain adjustment) in fig. (c) alternately in order to obatain the color-temperature adjusted condition as shown in fig. (d).
This adjustment can be completed by one time adjustment. not by repeating two adjustments alternatingly, if the black balance stabilizing circuit is temporarily disabled during adjustment. If the switch SW as shown in the following illustration is set to the 1st position, the $V_{K\text{-}G1}$ can be determined by RV2 alone. Therefore, the adjustment is made as follows. The switch SW is first set in the 1st position, and adjust RV2 as shown in fig.(b) for bias adjustment. Adjust gain adjustment too as shown in fig.(d). Set then the switch SW in the 2nd position in order to operate the black balance stabilizing circuit, and adjust RV3 until V2= V1 is established for color temperature adjustment. The alternate tracking adjustment is no more necessary.

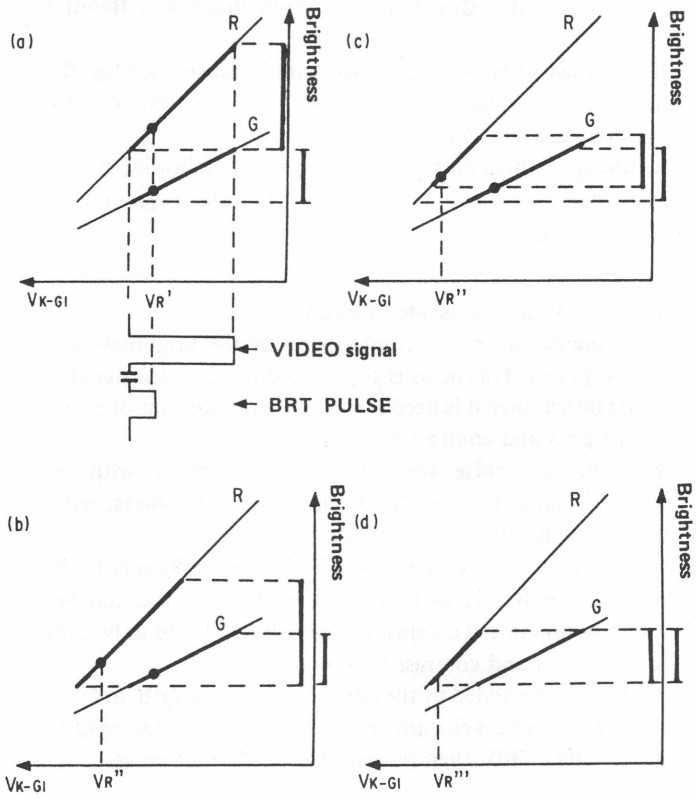

GENERAL DESCRIPTION (N, Z_A, Z_C, Z_D BOARDS)

Function

This block has the following functions.

(1) Aperture control (aperture control adjustment, ON/OFF sitch)
(2) RGB ON/OFF
(3) Internal SG/INPUT selection, internal SG output video pattern selection.
(4) Color temperature adjustment
(5) Digital convergence adjustment

Flow of Control

If the key switches on the N board is operated, the one-chip micro processor on the N board reads the information, codes the neccessary commands, and transmit the data by RS422 in serial form. The RS422 serial data transmission is done by every 3 bytes in asynchronous system. This serial data is received by SIO on the Z_C board, decoded by the CPU, and the decoded data are distribued to each port according to the command. The controls according to the key operation on the N board, is carried out.
The ports and memories that are controlled by the Z_C board, are assigned as follows.

Z_C RGB ON/OFF, NORMAL/TEST, SET UP etc.
Z_A cursor ON/OFF, cursor position, internal SG pattern selection and other controls for the BE board, aperture, W-BAL control.
Z_D digital convergence

Data Memory

The Z_C (EEPROM) memorizes the color temperature and digital convergence data. The digital convergence data is up to rough No.13.

The Z_D (S-RAM + BATTERY) memorizes the digital convergence data of rough No.14 and later so that the data is not lost even after Power OFF. The data is output to each ports when the Power is turned ON nest time.

The data runs in the S-RAM on the Z_C board during the adjustment, and is transmitted and memorized by the non-evaporating memory when the NORM/INPUT key is operated. Therefore, if power is turned OFF during adjustment, the set-up data that is established during the adjustment, will be lost. Please take care.

Memory Area

There are 8 memory areas for storing the convergence data and white balance data as follows.

Memory Area	Convergence Data
1	NORMAL SCAN HDTV-A
2	NORMAL SCAN HDTV-B
3	NORMAL SCAN PROG
4	Escape Area
5	UNDER SCAN HDTV-A
6	UNDER SCAN HDTV-B
7	UNDER SCAN PROG
8	Escape Area

Memory Area	White Balance Data
1	PRESET HDTV-A
2	PRESET HDTV-B
3	PRESET PROG
4	Escape Area
5	MANUAL HDTV-A
6	MANUAL HDTV-B
7	MANUAL PROG
8	Escape Area

Therefore, the convergence and white balance adjustments should be performed every each memory area. However, for the memory areas No.1 to 3 for the white balance the same data are stored by the adjustment of white balance preset data.

It is impossible to change the data the data of the memory areas No.1 to 3 for the white balance separately.

Data Refresh

The data in each port can be lost due to discharge or due to external noise. The software is provided so that the data in the memories are re-written to each port during the vertical blanking period.

Digital Convergence

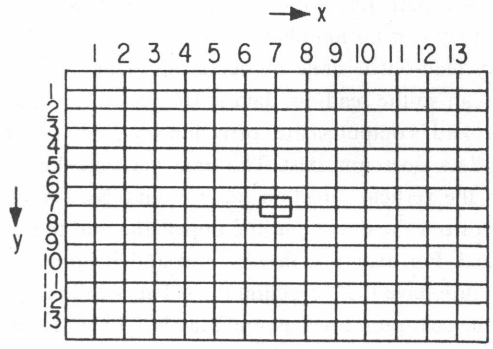

Hatch pattern

When the digital convergence mode is selected, the hatch pattern as shown in the illustration will come out. The most external surrounding lines are showing the effective picture area and the approx. 7% overscan area exists inside this effective picture area. However, this area reaches approx. 11% when only the horizontal direction is considered. This effective area has the crossing points of $13 \times 13 = 169$ points.

The memory of two addresses are assigned to each of 169 crossing points so that one address is used to memorize the vertical direction data while the other address memorizes the horizontal direction data. This memory is backed-up by the back-up battery located in te Z_D board. The memory data indicating the cursor position is supplied from the N board in the FINE mode and the data is increased and decreased. In the ROUGH mode, the cursor postion from no.1 through No.13 data is memorized in the separate EEPROM in the Z_C board and the control is done from the D_C board.

The cursor positions from No.14 through No.25 provide multiple address data corresponding to the afore-mentioned Z_D board memory that is increased and decreased with each address are weighted.

The general equation for this calculation is shown as follows.

$D_{NI} = D_N \pm_k f(x, y)$ equation-1

$f(x, y)$: increase/decrease pattern corresponding to cursor position

D_{NI}: new data

$_N$: old data

$_k$: coefficient

In practice, the k in the above equation is increased/decreased to obtain each D_{N-1}. This calculation is done by the 16 bits. The result is obtained from the upper 8 bits so that the error is minimized.

The data D_N is memorized in the Z_D board RAM, but data k is memorized in the Z_C board EEPROM. Therefore, once adjustment is completed, the Z_C board and the Z_D board should be handled as a pair. But if the "MEMORY ALL RESET" is established, they can be handled separately.

The memory read-out is done by accessing memory together with beam scan so the read-out data is D/A converted, passed through LPF and is output as the correction waveform. There is area where data does not exist. The area between the hatch crossings in the vertical direction has no data. So, the linear interpolation from the data from the upper line and the lower line is utilized. For example, the A point and B point in the following Figure have the correction data. The area between A and B has the scanning lines as much as N-1 lines. Then the correction data D_N at the I_N position can be obtained from the following equation.

$$D_n = A + (B - A)\frac{n-1}{N} \quad \ldots\ldots \text{equation-2}$$

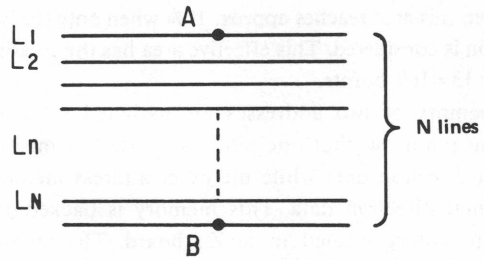

Method of interpolation

In practice, this calculation is performed by hardware circuit, as discussed in the Z_D board circuit description.

This is the method to make access to the data that are obtained as the beam scanning advances, and the correction waveform is provided. The previous data should be re-written during the adjustment proceeds. Therefore, the data that are obtained by the adjustment, are input during the vertical blanking period, by employing the interrupt function of CPU.

CIRCUIT DESCRIPTION REGARDING EACH CIRCUIT BOARD

N BOARD

The N board is consisted by the single chip micro-processor (IC5) that has built-in A/D convertor and a program memory (IC3).

The port is connected to the KEY matrix, LCD unit and LED serial I/O buffer. The +5V power is supplied from thee 8-pin mini DIN connector.

The software has the programs as follows.

(1) KEY data read-out and communication of the KEY command signal.
(2) Aperture control datas' A/D conversion.
(3) Mode and function control.
(4) LCD display control.

The software is reasonably made intelligent.

ZA BOARD

This board receives the commands from the Z_C board CPU and executes the following operations.

(1) B_E board control (internal SG), and cursor generator.
(2) Aperture data and white balance datas' D/A conversion.

(1) Cursor generator

The H-HATCH, and V-HATCH signal data are counted by IC7 and IC16 respectively. The output data are compared with the cursor position data on the cursor position data port (IC24), by IC8, IC9, IC17, IC18. Only when these two data are of same value, these two data are delayed for 1/2 cycle, and are AND-gated so that the output pulses are obtained as the Cursor Pulse. IC1, IC2, IC3 count the vertical sync and are oscillating the Flashing gate pulse that switches ON/OFF the above mentioned cursor pulse.

This cursor pulse is gated by the control pulses such as CURSOR ENABLE and FLASH ENABLE of the SG CONTROL port (IC26).

The cursor pulse is finally sent as the INVERT signal during the flashig mode and is sent as the hatch's brightness control signal during the flashing mode, to the B_E board.

(2) Aperture and white balance datas' D/A conversion

The IC29 through IC34 are the compact ICs that have the two channel D/A convertors with latch function, and operational amplifiers. These ICs receive various data from Z_C board CPU and convert them to the dc voltages ranging from 0V through 10V. They provide output to the following ten channels.

Bias (1st)	R.G.B	total 3 channels
Bias (2nd)	R.G.B	total 6 channels
Gain	R.G.B	total 3 channels
Aperture		1 channel

See the section on the C_A board for details on bias and gain.

ZC BOARD

This the familier CPU board using Z80A family (IC3, IC14, IC15).

Memories are used as follows.

RAM	2K byte S-RAM
PROGRAM ROM	8K byte EP-ROM
DATA ROM	4K byte EEPROM

The serial interface SIO is IC14 that is connected to the RS422 driver/receiver (IC12, IC13).

Approximate 5 MHz clock signal is generated by the S-type TTL, that is divided by two so that 2.5 MHz clock is used.
The ports (IC23, IC24, IC25) of this board provides the following funtions.

- SET-UP (V. SIZE control)
- INPUT/TEST control
- R.G.B. ON/OFF control
- Memory select control

Software of this CPU system receives command from N board and performs operation according to the commands. This is the main operation of this softward. Other operations are respective ports initialization in the event of power on, reflesh operation during the vertical blanking period and re-writing Z_D board RAMs, etc. The switch S2 is the NMI (non-maskable interrupt) switch that initializes all the memory data by software means. Therefore, take care of S2 operation. This initialization takes approx.40 seconds and then the red LED (D4) is lit on, after that, LEDs (D5, D6) are lit on, showing that all initilizations are completed.
The (ZC-2) setting pin can be connected either to A side or A side.
The Q2, Q3 circuit is to discharge the capacitor C5 in the event of power OFF so that the re-set circuit will operate correctly when the power is turned ON next time.
The IC7, IC8, IC9 circuit is the bus buffer that receives/transmits the various data between Z_A, Z_D, D_A, D_B, D_C ports and memories through the Z_M board mother board.

Z_D BOARD

The Z_D board has 8K byte S-RAM (IC13) to memorizes the digital convergence data. It receives power from normal 5V and back-up battery 3V. These 5V and 3V are OR gated by a diode.
The address lines and the data lines are connected to the D/A circuit during the read-out mode and to the CPU circuit during the write-down mode (write-down is executed during the vertical blanking), which is done by IC3, IC14, IC15, IC16.
A certain point on the TV screen has the horizontal direction data and the vertical direction data. These horizontal and vertical direction data are read-out by the time division method, latched (IC20, IC22) to coincide timing, and then sent out to D/A (IC21, IC22) circuit.
The horizontal direcion address data is obtained by counting the 8 bit data by IC10, IC11. This 8 bit data is produced by dividing the one horizontal data by 256 where the horizontal data is supplied from the dB board PLL circuit. At the same time, the vertical direction data is obtained by counting the horizontal rate pulse with the sequential counters IC1, IC2, IC6.
The interpolation is then discussed, referring the following illustration.

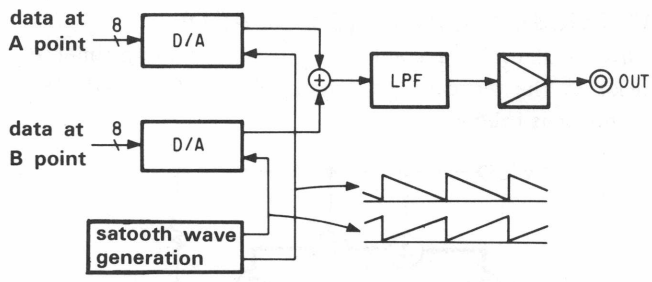

Interpolation

The sawtooth wave whose one cycle is equal to the length of one vertical hatch pitch is provided as shown in the above illustration, in two polarities of positive polarity and negative polarity. These sawtooth waves of two polarities are produced by IC3, IC4, IC5, and are supplied to the reference voltage input terminal of the D/A convertor circuit. These two 8 bit D/A convesions are amplitude modulated by the sawtooth waves, and the outputs are added so that the section 1-6 item equation-2 is fulfilled. Thus the memories are accessed and D/A converted so the appropriate correction wavfores are always generated.

V. PULSE Oscillator (DA BOARD)

This oscillator is a stable type oscillator using timer IC, reaet by the vertical sync signal. The stable type oscillator is shown as follows.

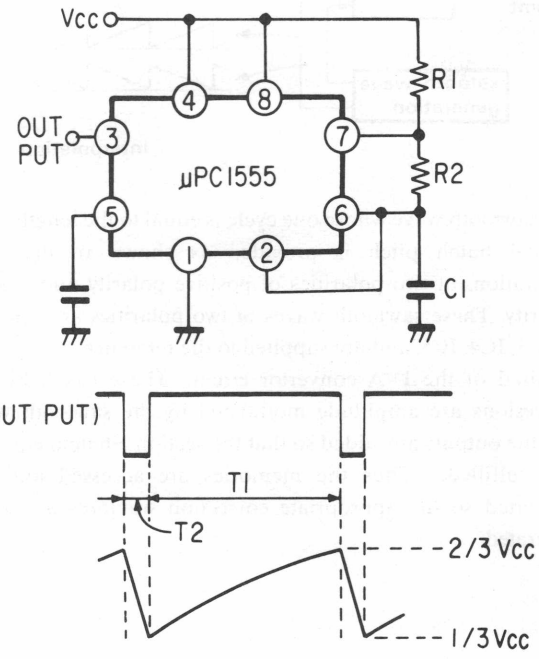

As the R1 + R2 charging current flows into C1, the voltage across C1 reaches the threshold level of the timer IC pin-⑥ (2/3 × Vcc), its output pin-⑦ is turned on to discharge C1 through R2. As discharging proceeds, the voltage across C1 (trigger terminal pin-②) reaches down to 1/3V×Vcc,its output is turned OFF so that the charging C1 through R1 + R2 starts. This operation is repeated to continue the astable operation. Formula of T_1 and T_2 are as follows.

$T_1=0.693\ (R_1+R_2)\ C_1$
$T_2=0.693\ R_2C_1$

Present value of R_1 is 47 kΩ+100k-B, R_2 is 1.8 kΩ and C_1 is 0.22, therefore, T_1 and T_2 are calculated as follows.

$T_{1(MAX)}=0.673\{(47k+100k)+1.8k\}\times0.22\times10^{-6}(S)$
$=22.68\ ms\fallingdotseq44\ Hz$
$T_{1(MIN)}=0.693\{(47k+0)+1.8k\}\times0.22\times10^{-6}(S)$
$=7.44\ ms\fallingdotseq134\ Hz$
$T_2=0.693\times1.8k\times0.22\times10^{-6}(S)=0.27\ ms$

The vertical pulse's retrace periodis 0.27msec so that the vertical oscillator variable width range is from 44 Hz to 134 Hz.
This oscillator is locked to the vertical sync by applying the vertical sync differentiated pulse of C1 potential, that pulls up potential to the 2/3 × Vcc level forcibly to reset this oscillator. Actual circuit is shown as follows.

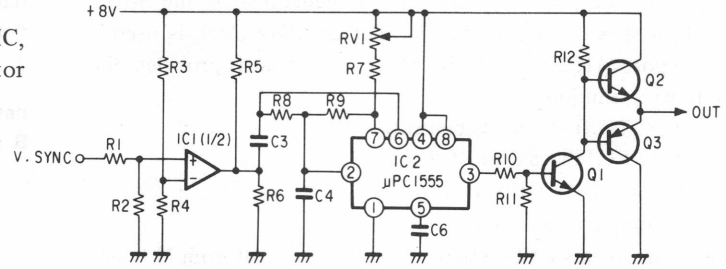

The vertical sync signal is input from the BN board with 12 Vp-p, divided by R1, R2, and is sent to comparator IC1 (1/2) where it is compared with the other input from R3, R4 potential (1/2 Vcc) so that the vertical sync input is wave-shaped. This output is defferentiated by C3, R8 and is then input to IC2-⑥ pin. The resistor R1 in the illustration's circuit means RV1+R7 , the resistor R2 means R9 and C1 means C4. IC2-③ pin output is inverted by Q1, buffered by Q2, Q3 to provide output.

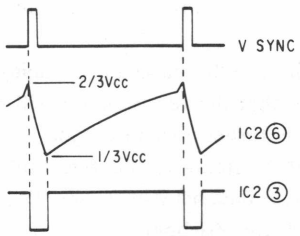

VERTICAL SAWTOOTH-WAVE GENERATOR (DA BOARD)

This vartical sawtooth generator comprises the sawtooth generator cirucit and frequency detect circuit. The sawtooth generator is shown as follows.

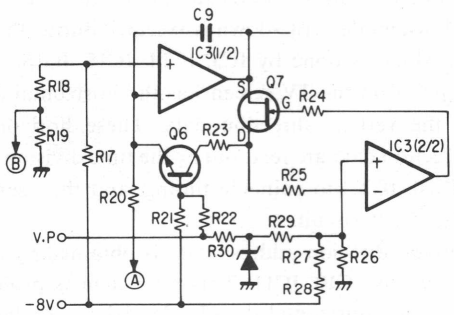

IC3 (1/2)'s positive terminal is biased to −2.5V dc by R17, R18, R19. The sawtooth is generated by a Miller integrator of R20, C9. This Miller integrator output is increasing linearly during when Q6 is OFF (scanning period).

When Q6 is turned ON (blanking period), Q7's source-drain circuit is shorted so that the output voltage is sharply c=decreased as shown in the following illustration (1), with the C9, R23 time constant, until −2.5V.

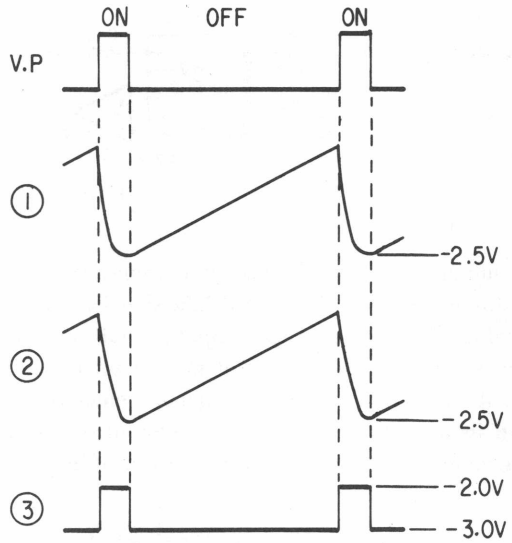

If this output signal is directly input to the V. OUT, a sharp (Vp=-L × delta i/delta t). The high amplitude blanking pulse causes on V.OUT saturation and also ringing. To prevent the ringing, the wave-form is changed into the signal that is shown as (2) in the illustration.

This wave-form change is done by the following circuit operation. As Q6 is turned ON, its collector voltage becomes −2.2V (−2.5V + 0.3V V_{ce}) that is routed through R23, R25, and then to IC3 2/2's - negative input. Its positive input receives the signal shown as (3) in the illustration that is the vertical pulse after clipped by R30, D1,and after biased by R26, R27, R28, R29. The FET Q7's impedance is controlled by IC3 (2/2) until Q7 drain reaches −2.0V.

Then the voltage across R23 becomes −2.2V − (−2.0V) so that the constant current operation is started. As C9 voltage is decreased, Q7 is turned ON to realize C9, R23 curve.

The above explanation is shown as follows.

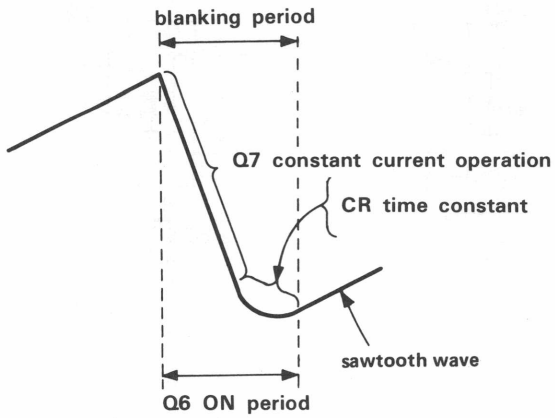

The frequency detector circuit is discussed as follows.

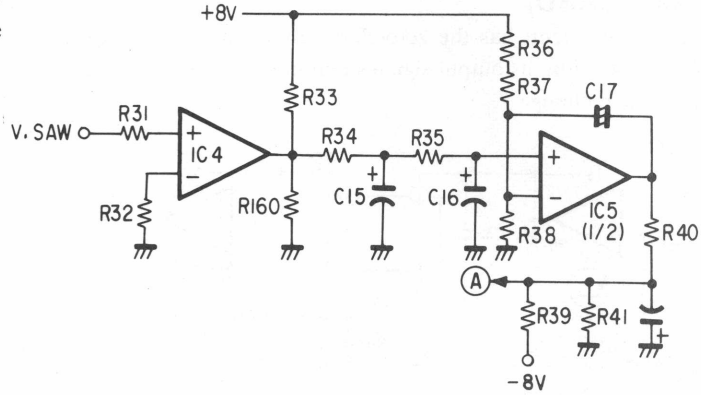

The sawtooth wave that is generated by the afore-mentioned sawtooth wave generator circuit, (shown in the following illlustration) is passed through R31 and is input to IC4 (μPC311C) zero-cross comparator where sawtooth signal is formed into rectangular wave as shown below. This rectangular wave is converted into dc voltage by the integrator circuit of R34, C15 and R35, C16. If the following wave form is 50/50, the dc voltage becomes 2.5V.

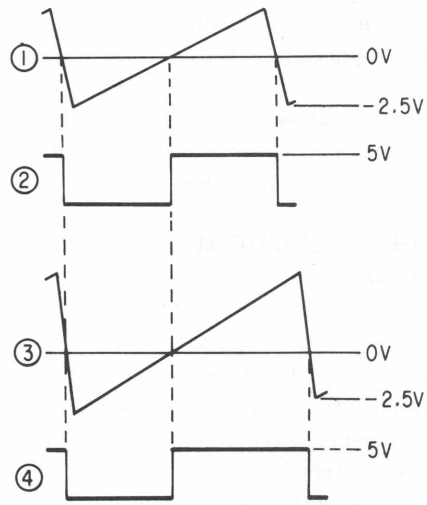

IC5 (1/2)'s ⊖ terminal is biased to 2.5V by R36, R38 while its output terminal is biased to ⊖ potential by R39, R40, R41, and is connected to the point Ⓐ of the afore-mentioned sawtooth wave generator circuit. If the point Ⓐ potential is increased, the voltage across R20 becomes small that reduces C9 integrating curren, and reducing the sawtooth wave amplitude samll.

If the low frequency sawtooth signal is input, the IC4 output loses 50/50 duty cycle that results in increase of integrator output.

Then the IC5 (1/2) output voltage is increased which increases the point Ⓐ, decreasing the sawtooth signal's amplitude. Then the waveform re-gains 50/50 duty cycle so that entire circuit's operation is stabilized.

This circuit operates so that the comparator output shold have 50/50 duty cycle where the sawtooth signal amplitude is determined by R17, R18, R19 (negative signal area) and R36, R37, R39 (positive signal area).

VERTICAL PARABOLIC SIGNAL GENERATOR (DA BOARD)

Since this circuit has the zero-clamp function and the peak-clamp function, its output signal's amplitude is not affected by frequency change.

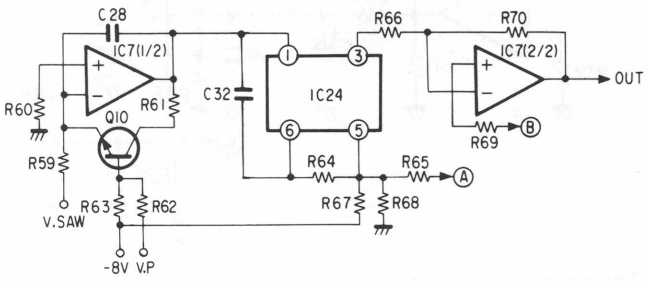

IC7 (1/2) and Q10 are generating the parabolic signal. Since this circit is of common Miller integrator, explanation is omitted. IC24 is a MOS FET that is functioning as the voltage-controlled variable resistor. Its resistance value between pin-① to pin-③ can be controlled by the dc voltage that is applied to pin-⑤. The point Ⓐ in the illustration is receiving the peak-clamp controlling voltage that is supplied from IC8 (1/2). The point Ⓑ in the illustration is receiving the zero-clamp controlling voltage that is supplied from IC8 (2/2). The clamp pulse for the peak-clamp operation is the vertical pulse as it is. The clamp pulse for the zero-clamp is obtained by differentiating the sawtooth generator's frequency detector circuit's rectangular output which is the rise-up pulse.

VERTICAL SINUSOIDAL WAVE GENERATOR (DA BOARD)

Sinusoidal wave (② in the following illustration) can be obtained by integrating a parabolic signal (① in the following illustration) in general. But if the parabolic signal is divided into two, as shown in ③ of the illustsration, a horizontal bar will be the result on monitor screen. In order to prevent the horizontal bar, the sinusoidal signal shown as ④ in the illustration should be prepared. This signal cannot be obtained by integrating the parabolic wave. This equipment has the circuit design to produce the signal shown as ④ in the illustration.

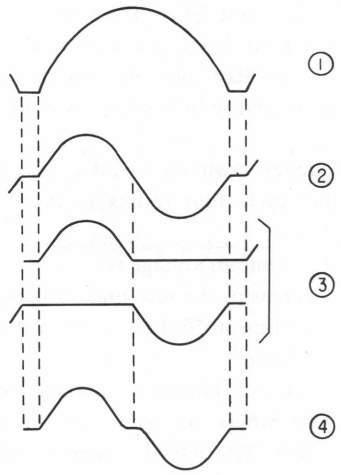

The circuit shown is a common full-wave rectifier circuit. Sawtooth wave signal is supplied to its input. When D11 $V_{IN} \leq 0$, $-R108/R105 \times V_{IN}$ is established. If $V_{IN} > 0$, D11 is turned off to 0.

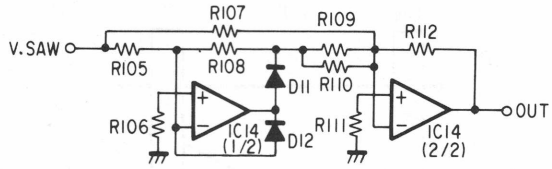

$R105 = R107 = R108 = R109 = R110 = R112$

This output signal and the V_{IN} are current-mixtured by IC14 (2/2) through R109//R110 and R107,the signal shown as follows is obtained. This output is again input to a full-wave rectifier as shown below. Since the input of this circuit is dc-biased by R113, R114, R115, the sawtooth signal's center is rectified as shown in the following illustration. Output of this circuit is again input to the IN terminal of the circuit as shown.

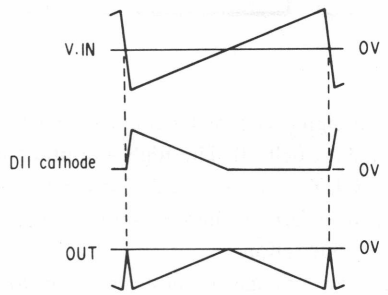

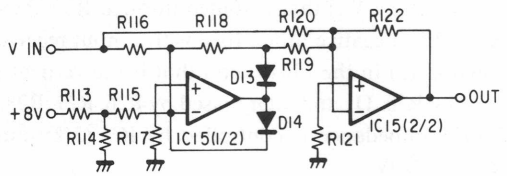

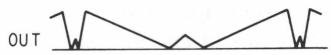

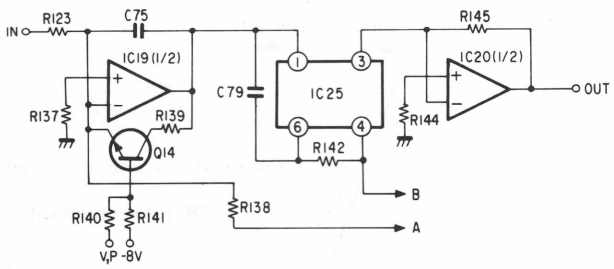

IC193 and Q14 form a Miller integrator where the IN signal is integrated. The zero clamp pulse (same signal as used in the parabolic signal zero clamping) is input to Ⓐ from IC21 (1/2) providing the clamping control voltage, shown as ③ in the illustration. Signals ④ and ⑤ in the illustration are showing the timing chart of the clamp pulse for the peak-clamping. The threshold voltage shown as ④, is obtained from the Ⓑ center point between R18, R19 bias resisters of −2.5V as described in the vertical sawtooth generator circuit. This threshold voltage and the sawtooth wave signal are input to the comparator and the signal shown as ⑤ in the illustration is obtained. Its differentiated pulse's rise-up edge is formed into pulse by IC9 (4/4) so that its output pulse is used as the clamp pulse. The control voltag is input to point Ⓑ from IC21 (2/2).

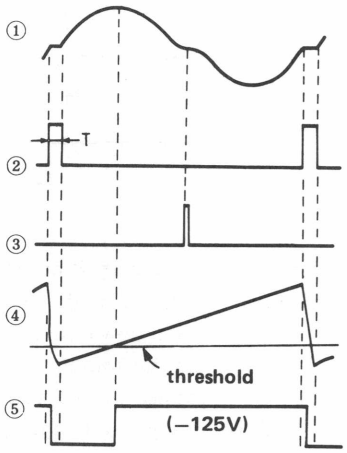

Waveform Dividing Circuit

The waveform division is done by using the multiplier type D/A convertor. The D/A convertor circuit is shown in the following illustration where the reference input current value is divided equally by 256 from MSB data to LSB data so produce the I_{OUT} output signal. If 2 mA current is introduced to the reference input ⊕ , while the reference inputs ⊖ are imaginate-short-circuited, and the data are FF (8 lines from MSB to LSB are all HIGH), following results are obtained.

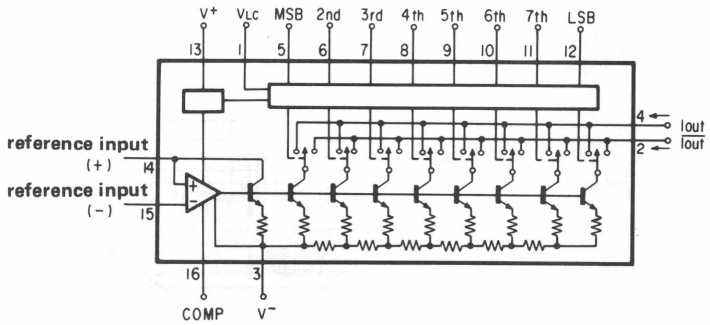

$$Io = 2mA \times \frac{255}{256} = 1.992mA,\ \overline{Io} = 2mA \times \frac{0}{256} = 0mA$$ となる。

If data are set to "00", the following results are obtained.

$$Io = 2\ mA \times \frac{0}{256} = 0\ mA,\ Io = 2\ mA \times \frac{255}{256} = 1.992\ mA$$

Nextly, the priciple to divide the parabolic signal is explained as follows.

This division is realized by the D/A convertor of IC11, IC13 and operational amplifier of IC12. The vertical parabolic signal input flows the parabolic current into the D/A convertor (IC11, IC13)'s reference input ⊕ (pin ⑭), through R97, R101.

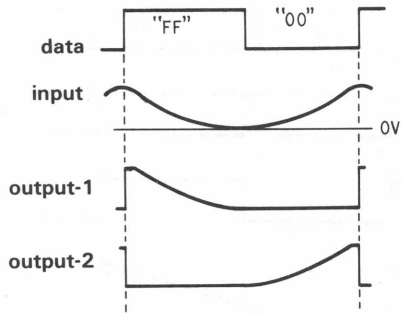

Since the input signal current is⊕, it is connected to the⊕input terminal. After data lines of D0 through D7 (from pin-⑤ through pin-⑫) are connected, the recutangular wave signal that is produced from the vertical sawtooth signal, is input through Q13.

As long as the data are "FF", the IC13's output curent (pin-④) is converted to voltage by IC12 (2/2), so that the output "1" waveform is obtained. While the data are "00", the IC11 output current (pin-②) is converted into voltage by IC12 (1/2) so that the output "2" is obtained.

This is the method to divide the parabolic wave signal into two parts.

Regarding the sinusoidal wave signal, the right half of the signal (that is the lower half of screen) is the negative voltage, so that the input to the D/A convertor is fed to the ⊖ terminal (pin-⑮) of IC16. The rest of operation is identical to that of parabolic dividing circuit operation.

PLL (DB BOARD)

The horizontal rate correction waveform and modulation waveform are generated in this board. All the horizontal rate waveforms are generated by all digital circuits

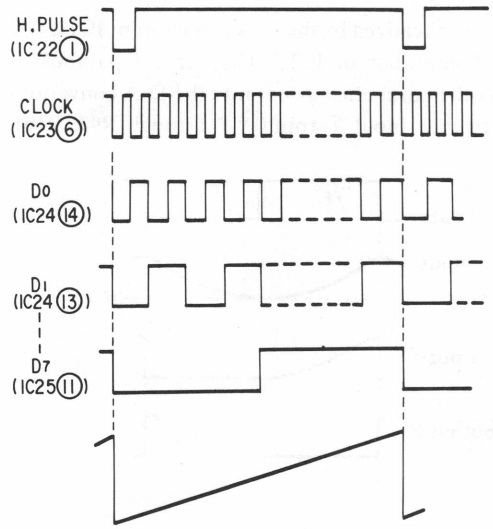

The PLL is used to synchronize the horizontal deflection and the horizontal correction signal. The horizontal pulse is input from the horizontal deflection into IC22- ① pin. The clock signal is obtained from IC23- ⑥ pin and it drives the IC24, IC25 counter. The output MSB from IC25- ⑪ pin is returned to IC22- ③ pin. The synchronization between the horizontal pulse and the counter is thus established. The horizontal sawtooth signal is obtained by feeding the counter's output 8 bit to the D/A converter input.

This horizontal sawtooth correction signal is amplified and then supplying correction current through the SUB DY so that the registration is corrected. However, the correction signal is phase-delayed with this relationship between the horizontal pulse and horizontal sawtooth. Therefore, this correction signal is phase-advanced by IC34, SW4. The IC34 is called as 8 bit MAGNITUDE COMPARATORS that has two 8-bit inputs of P and Q.

The inputs P and Q are compared. If P>Q is input, pin- 1 is set "L". The P input receives the counter's output in the DB board, while the Q input is preset by SW4.

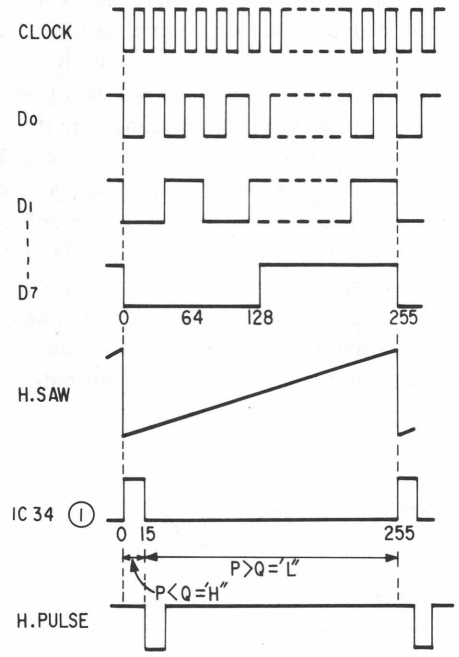

The present range is from 0 through 15. If preset is set to "15", the IC34- ① pin will have the signal as in the illustration. Since this PLL synchronizes at the fall-down edge, the horizontal pulse becomes as shown in the illustration, showing that the horizontal sawtooth signal advances to the horizontal pulse. This preset value of "2" is appropriate in the HDVS.

HORIZONTAL SAWTOOTH WAVE GENERATOR (DB BOARD)

The principle to generate sawtooth wave signal by connecting counter output into D/A converter.

The D/A converter block diagram is shown. The reference input ⊖ terminal is imaginage-short-circuited while the reference input ⊕ terminal is connected to the reference voltage source through resistor. If the reference voltage of 10V is connected to input through 5k ohms, the 2mA IREF flows, the output I_{OUT} and the inverted $\overline{I_{OUT}}$ will change according to the 8-bit data inputs, as shown.

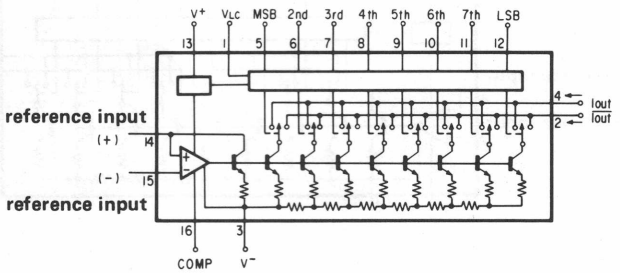

The following illustration shows the the current-to-voltage conversion circuit. This circuit converts the I_0 and the inverted $\overline{I_0}$ current output into the voltage output. If input data from "00" through "FF" are input to this circuit, the output voltage of ±10V is obtained. In the DC board in particular, the correction signal is input to the V_{REF} input.
If the parabolic voltage as shown below is input while R_{REF} is 4.7k ohms, approx. Approx lmA parabolic carrent.

$$I_{REF}=\frac{V_{REF}}{I_{REF}}=5/4.7\ k\Omega=1.06\ mA$$

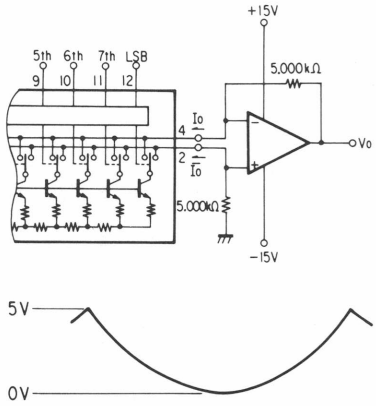

If the input data are "FF",

$$\begin{cases} Io=\frac{255}{256}\times 1.06\ mA\ p\text{-}p=1.056\ mA \\ Io=\frac{0}{256}\times 1.06\ mA\ p\text{-}p=0\ mA \end{cases}$$

+ 5.28V=1.056mA×5.0k ohms parabolic voltage is output.

If the input data are "00",

$$\begin{cases} Io=\frac{0}{256}\times 1.06\ mA=0\ mA \\ Io=\frac{255}{256}\times 1.06\ mA=1.056\ mA \end{cases}$$

the output ⊖ 5.28V=1.056 mA×5.0k ohm parabolic voltage that is inverted signal from the input, is obtained.
If the input data are "80",

$$\begin{cases} Io=\frac{128}{256}\times 1.06\ mA=0.53\ mA \\ Io=\frac{127}{256}\times 1.06\ mA=0.526\ mA \end{cases}$$

the output of ⊕ 0.02V=0.53 mA×5.0k ohms parabolic voltage is obtained.
As discussed already, the amplitude and polarity of the correction waveform can be adjusted by the input digital data. The IC type CP2005S has two sets of the pair of the aforementioned D/A convertor and 8-bit latch. The block diagram is shown.

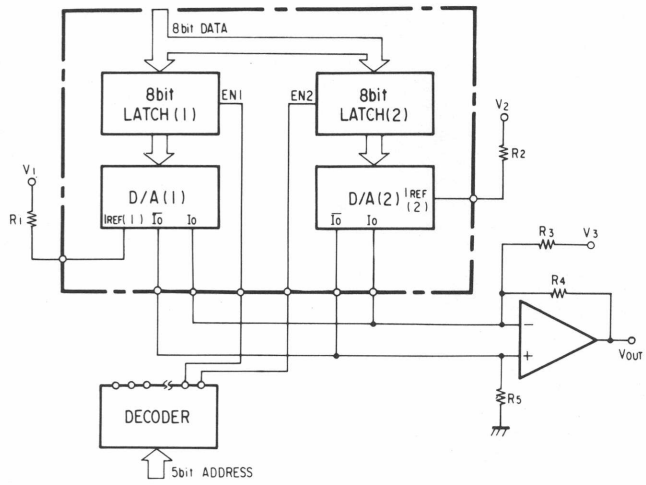

The 5-bit address from the CPU determines the lcation and the 8-bit data from the CPU too determines data. Therefore, the 5-bit address and the 8-bit data from the CPU drives the latch that is corresponding to the point to be adjusted on monitor screen, and change the data. If the latch-(1) shown in the last illustration is driven, the D/A convertor-(1) data is changed so that the correction signal of V1 becomes I_{REF} by R1 and is output to V_{OUT}. The maximum output voltage is determined by the R1 resistor's value, if V1 is of fixed value.
If the latch-(2) address is designated by the CPU, the D/A convertor-(2) driven so tat the V2 correction waveform can be adjusted. These two correction waveforms of V1 and V2 are connected directly to respective D/A convertor's Io and $\overline{Io}$, so that they are current -added and then fed to operational amplifier where current is converted into voltage.
In practice, the numbers of D/As that is equal to the number of correction points are connected, and all Ios and inverted Ios are connected in parallel.
The V3 correction waveform shows the connection method when the correction value is of fixed value, or the correction value is already obtained in the separate circuit so that the correction value is added here.
In this case, the correction value is determined by R3, and the parallel values of R3, R4 should be of R5 value.

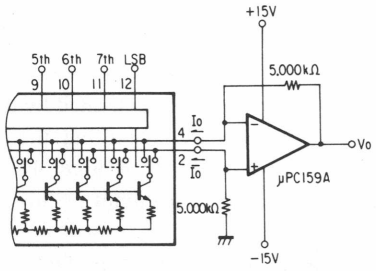

	MSB	2nd	3rd	4th	5th	6th	7th	LSB	Io (mA)	$\overline{Io}$ (mA)
Full Scale	1	1	1	1	1	1	1	1	1.992	0.000
Full Scale −1LSB	1	1	1	1	1	1	1	0	1.982	0.008
Half Scale +1LSB	1	0	0	0	0	0	0	1	1.008	0.984
Half Scale	1	0	0	0	0	0	0	0	1.000	0.992
Half Scale −1LSB	0	1	1	1	1	1	1	1	0.992	1.000
Zero Scale +1LSB	0	0	0	0	0	0	0	1	0.008	1.982
Zero Scale	0	0	0	0	0	0	0	0	0.000	1.992

The 8-bit output from the counter is "0" (00) at the begining of scanning, is "128" (80) at the center of scanning, and is "255" (FF) at the end of scanning. The output I_O and the inverted output $\overline{I_O}$ will change from MAX to MIN and from MIN to MAX, respectively. After this current output is converted from current into voltage, the output sawtooth is obtained.

Horizontal Parabolic Signal Generator (DB Board)

Using the same principle as the generation of sawtooth signal, as discussed in the previous paragraph, the 8-bit output from counter is fed to D/A converter to generate analog signals. But, the parabolic signal, sinusoidal signal and desired signals can be generated by inserting ROM in between the 8-bit counter output and the D/A converter input.
ROM data are shown.

IN	OUT	position in the illustration
00	FF	Ⓐ
40	approximately 5.0	Ⓑ
80	00	Ⓒ
CC	approximately 5.0	Ⓓ
FF	FF	Ⓔ

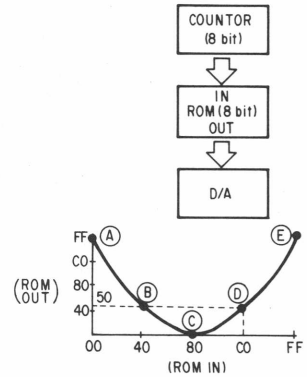

The typical five points are described, but 256 data are input in practice such as 00,01,02 . . . . . FD,FE,FF so that Ⓐ to Ⓑ to Ⓒ to Ⓓ to Ⓔ so on are made smooth.

CP2005S

The type PC624C D/A converter is used only in the horizontal sawtooth generation. Other signals such horizontal parabola, horizontal sinusoidal and the division signals are generated by using the type CP2005S IC.

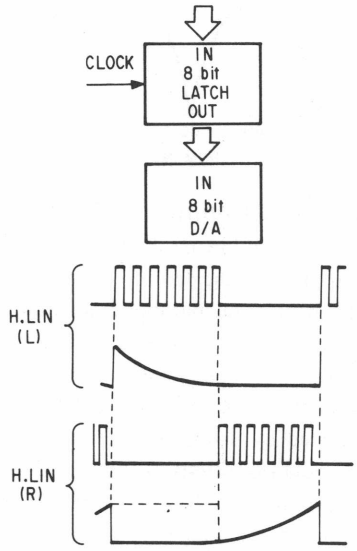

The detailed explanation is made in the DC board circuit description, but the operating principle is as follows.
As the block diagram of principle is showing, the u-bit data are connected to the latch and then to the D/A converter. The clock signal is required for the 8-bit word, but the clock signal is divided into left half and right half as shown in the illustration. In producing the horizontal linearity signal (left), the left side output has the sawtooth output because of existense of clock input, but the left half of the output becomes "00"=0V, because the clock input for the left half is "00".
The right half of the screen has small change. Since clock input is existing in the right half, the D/A output will provides sawtooth output in the right half. There is no difference so far. But the last clock's data is "FF", not "00", so that the high "FF" output will continue as shown by the dotted line in the illustration. In order to prevent this continued high output, the ROM data is changed. Reminding the afore-mentioned horizontal parabolic signal generator's explanation, the ROM input of "FF" will produce the ROM output of "FF", but in this circuit only, the ROM's "FF" input will produce the ROM's output of "00". So the last clock data will produce output of "00", as shown in the solid line in the illustration.

HORIZONTAL SINUSOIDAL WAVEFORM GENERATOR (D_B BOARD)

This generator can be made by using the ROM that has the data content as shown below, in the circuit as discussed in the horizontal linearity signal generator.

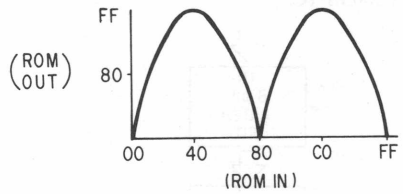

Modulation Signal Waveform

The signal shown in the following illustration is the correction waveform to be applied to the left-top of screen.

In the case of the horizontal parabolic generator, the I_{REF} is input from the high precison reference voltage source throu resistor, functioning as the dc current. This I_{REF} determines the signal amplitude of the horizontal parabola. The modulation waveform is generated by using this principle of I_{REF}.

If the vertical parabola (top) (left), is input inplace of the high precison reference voltage, the I_{REF} signal becomes the vertical parabola (top) current. As this output I_{REF} is input to the horizontal linearity (left) signal generating circuit, the output as shown in the illustration is obtained. The screen's top right correction signal is generated from the vertical parabola (top)'s I_{REF} and the horizontal linearity (right) signal. The bottom left correction signal is generated from the vertical parabola (bottom)'s I_{REF} and the horizontal linearity (left) signals. The screen's right bottom correction signal is generated from the vertical parabola (bottom)'s IREF and the horizontal linearity (right) signals.

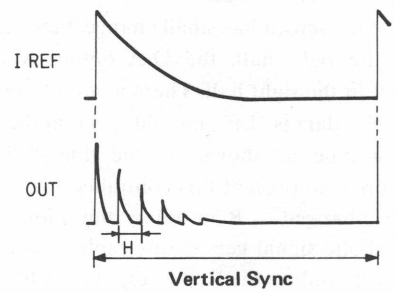

D_C BOARD

The correction signals that are generated by the D_A, D_B boards are controlled by the CPU regarding their amplitude and polarity. The CP2005S type IC is used. This is a hybrid IC packaged in plastic mold. The circuit is shown in the following illustration.

This IC has two sets of the pair of 8-bit D/A convertor and 8-bit latch. The D/A convertor is already explained in the D_A, D_B board already, but repeat a bit again. If 10V dc is applied as the V_{REF}' and 5k ohms are used as the R_{REF} (reference resistor),the I_{REF} (reference current) becomes as follows.

$$\frac{V_{REF}}{V_{REF}} = 10/5 \times 10^3 = 2 \text{ mA}$$

The I_O + inverted $\overline{I_O}$ becomes $I_{REF} \times 255/256$. The ratio of $\overline{I_O}$ and the inverted I_O can be changed by the data input.

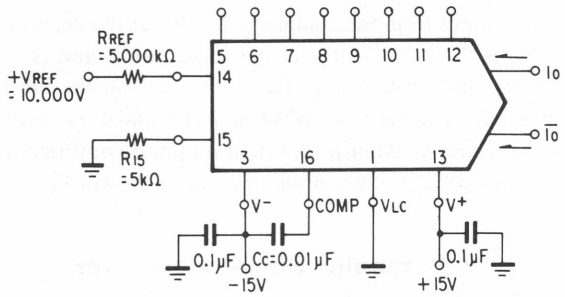

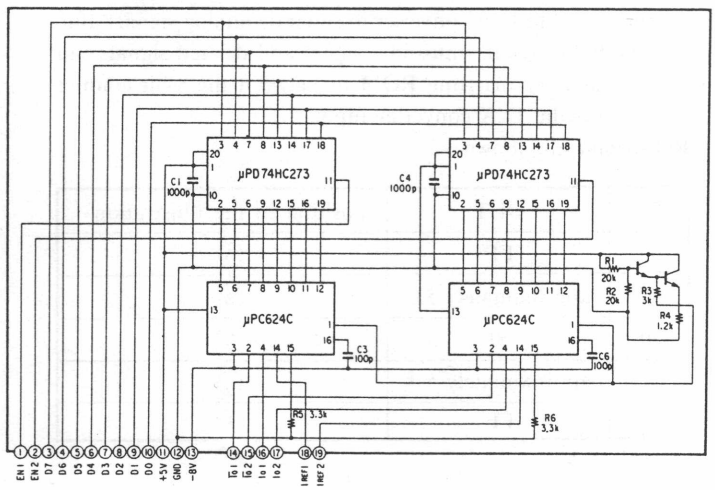

SECTION 4
ADJUSTMENT

4-1. INTERNAL VIEW DIAGRAM

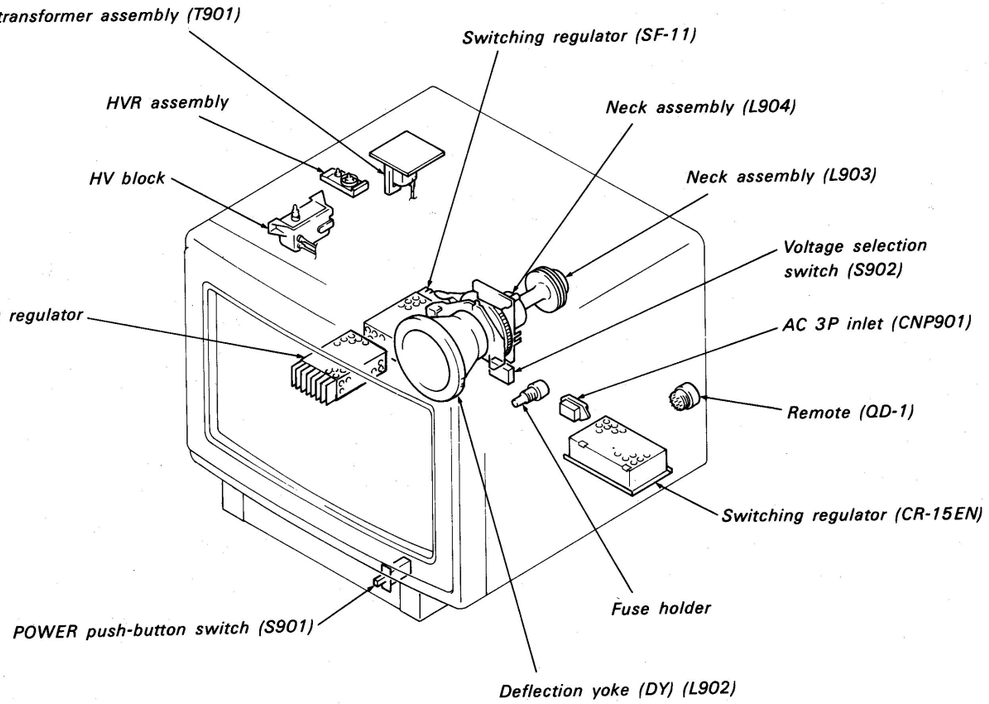

4-2. BOARD ARRANGEMENT DIAGRAM

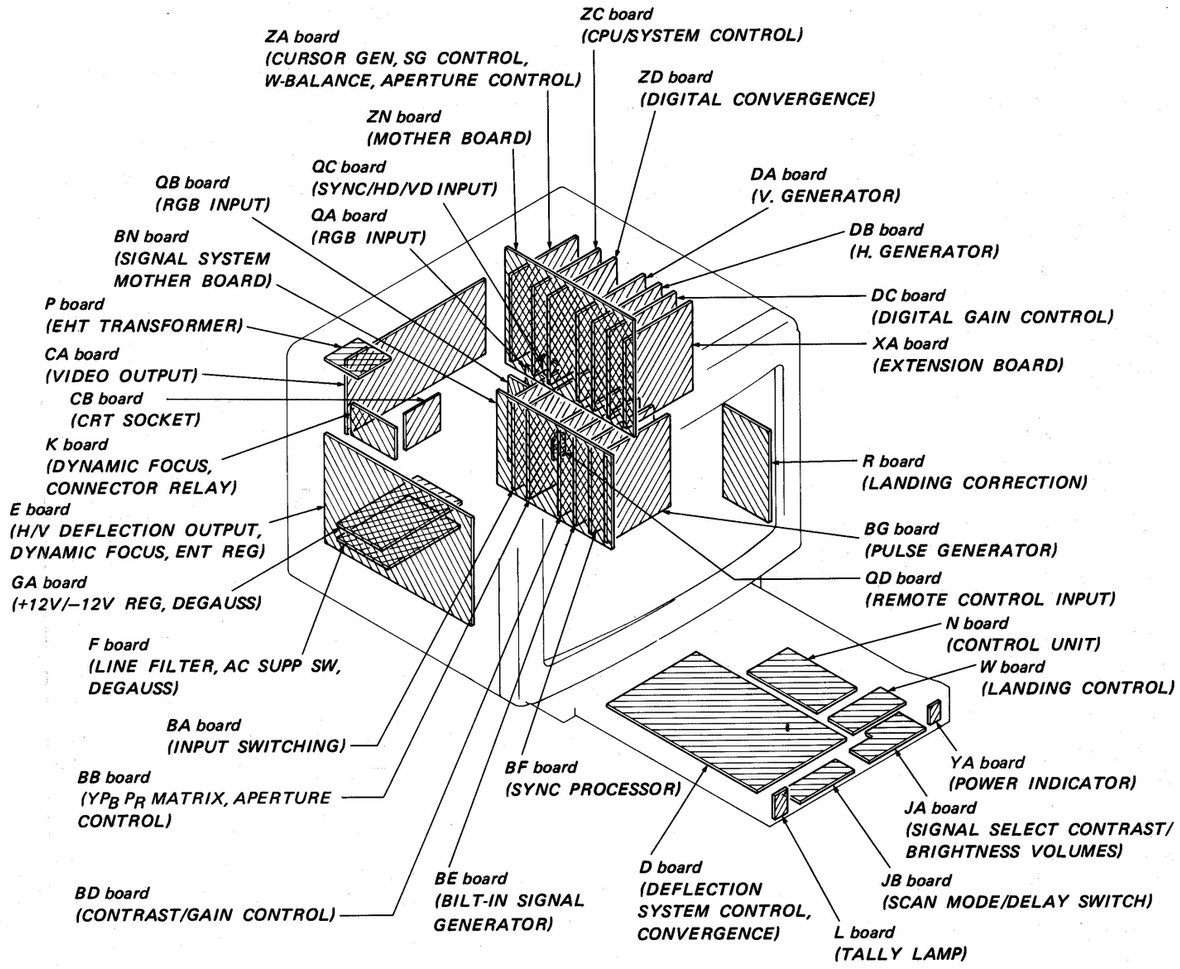

4-3. QUICK REFERANCE

SECTION \ BOARD	BA	BB	BD	BE	BF	BG	BN	CA	CB	D	DA
CIRCUIT DESCRIPTION	3-18	3-19	3-12 3-21	3-23	3-23	3-12 3-14 3-24	–	3-14 3-27	–	3-1	3-32
ADJUSTMENTS	–	4-40	–	4-42	4-43	4-47	–	4-49	–	4-28	4-35
BLOCK DIAGRAM	5-1	5-1	5-3	5-1	5-2	5-3	–	5-4	5-14	5-12	5-10
MOUNTING DIAGRAM	5-21	5-29	5-35	5-37	5-45	5-47	5-57	5-60	5-62	5-66	5-77
SCHEMATIC DIAGRAM	5-23	5-27	5-33	5-39	5-42	5-49	5-54	5-63	5-65	5-69	5-74
ELECTRICAL PARTS LIST	7-1	7-12	7-3	7-15	7-23	7-20	7-1	7-23	7-23	7-37	7-38

SECTION \ BOARD	DB	DC	E	K	P	GA	F	JA	JB	L	Y	N
CIRCUIT DESCRIPTION	3-36	3-38	3-7	–	–	3-10	3-9	–	–	–	–	3-28 3-30
ADJUSTMENTS	4-25 4-36	–	4-25 4-27	–	–	–	–	–	–	–	–	–
BLOCK DIAGRAM	5-9	5-9	5-12	5-13	5-12	5-13	5-13	5-4	5-4	5-4	5-4	5-6
MOUNTING DIAGRAM	5-79	5-87	5-91	5-90	5-90	5-101	5-101	5-102	5-102	5-102	5-102	5-103
SCHEMATIC DIAGRAM	5-81	5-84	5-93	5-95	5-95	5-99	5-99	5-100	5-100	5-100	5-99	5-105
ELECTRICAL PARTS LIST	7-30	7-32	7-33	7-46	7-6	7-22	7-8	7-44	7-45	7-46	7-44	7-50

SECTION \ BOARD	QA	QB	QC	QD	R	W	ZA	ZC	ZD	ZN	XA
CIRCUIT DESCRIPTION	3-17	3-17	3-17	–	3-11 3-37	3-11 3-37	3-28 3-30	3-28 3-30	3-28 3-31	–	–
ADJUSTMENTS	4-38	4-38	4-38	–	4-25	4-25	–	–	–	–	–
BLOCK DIAGRAM	5-1	5-1	5-1	5-1	5-14	5-13	5-7	5-6	5-7	–	–
MOUNTING DIAGRAM	5-107	5-107	5-107	5-108	5-112	5-114	5-121	5-123	5-131	5-137	5-139
SCHEMATIC DIAGRAM	5-109	5-109	5-109	5-109	5-115	5-116	5-118	5-125	5-128	5-134	–
ELECTRICAL PARTS LIST	7-10	7-11	7-9	7-10	7-6	7-44	7-46	7-48	7-49	7-46	7-45

4-4. SUB CONTROL PANEL

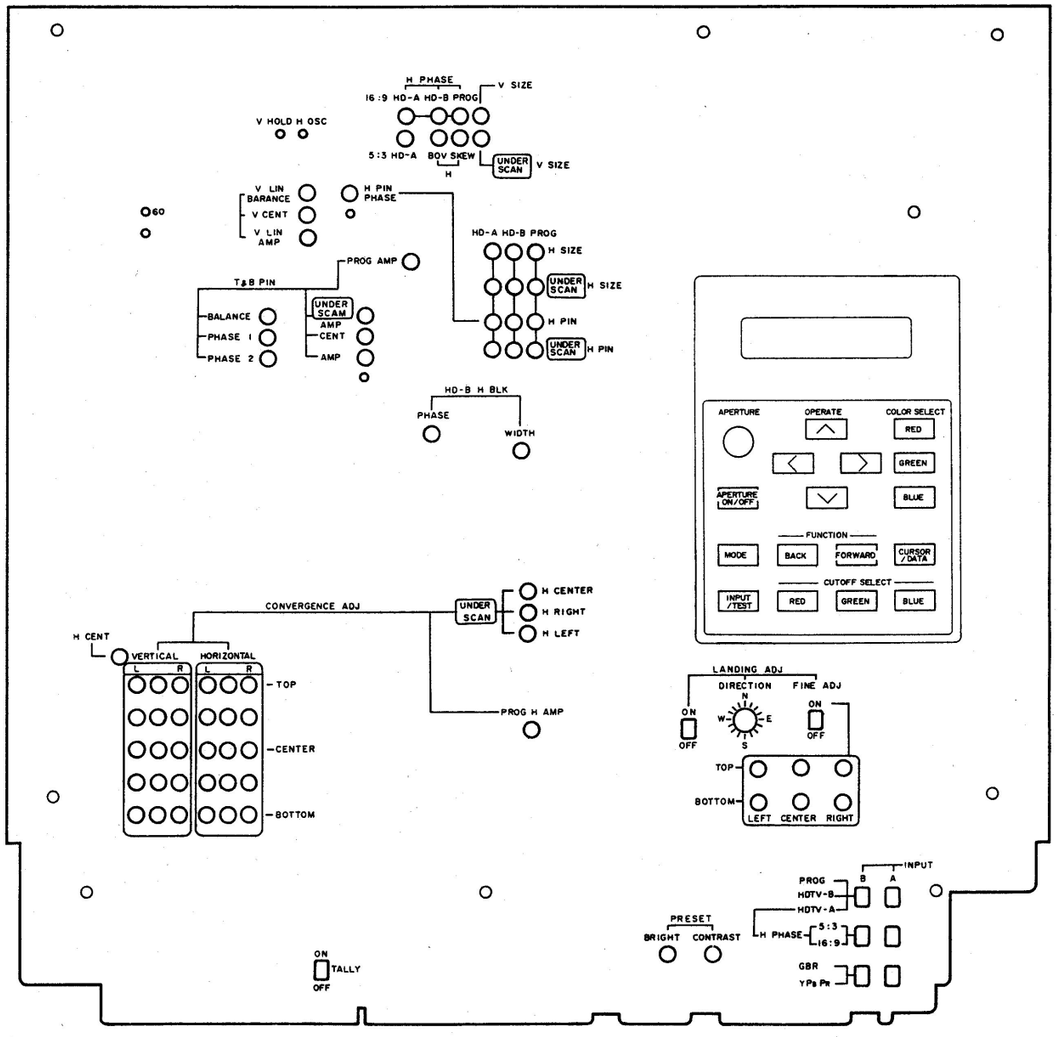

4-5. SET-UP ADJUSTMENT

It describes the setting adjustment and adjusting method when the CRT is replaced.
Moreover, normally, the convergence and white balance adjustments should be performed with the volume of the subcontrol panel. (See SECTION 1 OPERATION.)

[JIG TOOLS AND MEASURING INSTRUMENTS REQUIRED]

1. Signal generator
2. Oscilloscope
   SONY TEKTRONIX 2465 type or equivalent
3. Color analyzer
   MINOLTA TV-COLOR ANALYZER II or equivalent
4. Digital voltmeter
   Number of the effective digits: Over 5 digits
5. Tracking scope
   TAKEDARIKEN TR4110+TR4114T or equivalent
6. Pulse generator
   HP8007B or equivalent
7. FET probe
8. Frequency counter
9. Beam landing adjusting jig

4-5-1. Setting adjustment

When the horizontal or vertical terrestrial magnetism strength differs by changing the setting of the location, the purity cannot be adjusted by the LANDING ADJ of the W board. In this case, the following adjustments become necessary.

Note: The terrestrial magnetism strength of the HDM-2830E has been adjusted to 0.25 gauss for the horizontal strength and 0.50 gauss (2830), 0.45 gauss (2830E) for the vertical strength at the time of shipment.

[WHEN IT IS SHIFTED TO A LOCATION WHERE THE VERTICAL TERRESTRIAL MAGNETISM STRENGTH DIFFERS]

- Purity adjustment is necessary.

Note: The Landing is influenced by the cabinets. Make a purity adjustment with the top and side cabinets installed (the back cabinet should be removed).

1. Receive the white signal in the state of CONTRAST and BRIGHTNESS being preset (The manual switch is turned OFF.) and maintain the current flow for over 30 minutes.
2. Set it with the CUT OFF SELECT on the N board to green pure color.
3. Turn OFF the LANDING ADJ ON/OFF SW (SW2) on the W board.
4. Set degauss by pressing the DEGAUSS SW.
5. Remove the cabinet and adjust by turning the purity knob of the deflection yoke so that the center of the screen becomes brightest in green.

Note: An accurate landing adjustment can be achieved by using the beam landing adjustment jig.

6. Turn On the LANDING ADJ ON/OFF SW (SW2) on the W board, after matching so that the DIRECTION SW (SW1) faces the front of the CRT and by making into single colors of red, green and blue, confirm that the respective colors are all pure.

[WHEN IT IS SHIFTED TO A LOCATION WHERE THE HORIZONTAL TERRESTRIAL MAGNETISM STRENGTH DIFFERS]

- The adjustment of the reference voltage of the direction correction signal (R board) becomes necessary.

1. Set the LANDING ADJ DIRECTION SW (SW1) on the W board to SE (6).
2. Connect a DC voltmeter to TP1 on the R board and adjust with RV1 so that it becomes TP1 = A (V).
3. Set the LANDING ADJ DIRECTION SW (SW1) on the W board to S (8).
4. Connect a DC voltmeter to TP3 on the R board and adjust with RV2 so that it becomes TP3 = B (V).

Note: The A and B differ depending upon the strength of the horizontal terrestrial magnetism (BH).

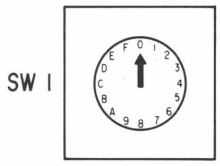

B_H (GAUSS)	0.1	0.2	0.3	0.4	0.5
A (V)	−0.67	−1.33	−2.00	−2.67	−3.33
B (V)	−1.00	−2.00	−3.00	−4.00	−5.00

4-5-2. Adjustment after Replacing CRT

The following adjustments become necessary after replacing the CRT.

- **Deflection yoke installation adjustment**

Note: This adjustment is unnecessary when the adjusted deflection yoke has been installed to the new picture tube.

- Purity adjustment
- LANDING ADJ preset adjustment
- Focus adjustment
- Convergence adjustment
- G2 adjustment
- Color temperature adjustment

[DEFLECTION YOKE INSTALLATION ADJUSTMENT]

1. Receive the white signal, and maintain the current flow for over 30 minutes under the condition of the CONTRAST MANUAL and BRIGHTNESS MANUAL VR are being preset.
2. Press the CONTRAST MANUAL SW and turn the CONTRAST MANUAL VR fully clockwise. Turn OFF the LANDING ADJ ON/OFF SW (SW2) on the W board.

[PURITY ADJUSTMENT]

1. Set the purity knob to the mechanical center.

Note: Be sure to use the DEGAUSS switch after an interval of for over 5 minutes when it is used continuously.

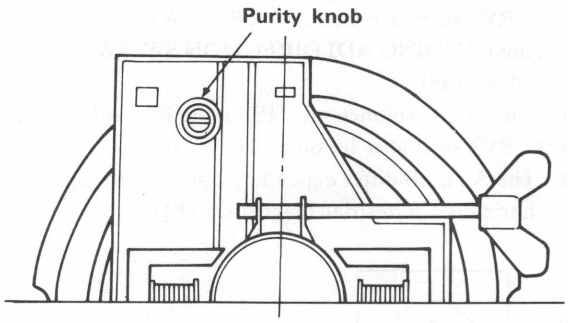

2. Attach tightly the DY to the CRT.
3. Fix the Neck assembly to the position shown in (Fig. below).

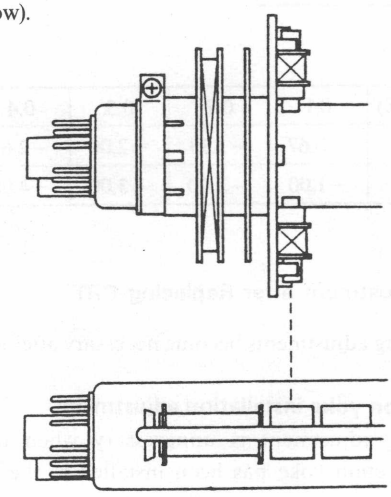

4. Make it into pure green color with the CUT OFF SELECT of the subcontrol panel (N board). Turn OFF the red and blue.
5. Adjust the purity magnet so that the green comes at the center of the screen.

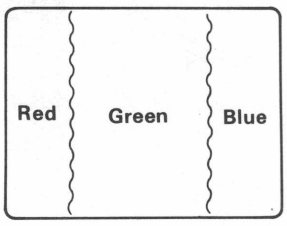

6. Pull back the DY and make the screen entirely green raster.
7. Adjust the screen into pure red color with the CUT OFF SELECT of the N board.
8. Perform the adjustments of steps 5 and 6 in red so that the entire screen becomes into pure red color.
9. Adjust the screen into pure blue color with CUT OFF SELECT on the N board.
10. Perform the adjustments of steps 5 and 6 in blue so that the entire screen becomes in pure blue color.
11. Be sure to confirm that the respective pure color rasters of red, green, and blue are not mislanding with one another.
12. Fix the DY. (Tighten the DY fixing screw.)
13. When there is a vertical misconvergence on the X axis, shake the DY neck and insert the wedge-shaped DY spacer between the neck and yoke.

Note: At this point, be sure to keep the V CONV (RV24 and RV34) of the sub control panel (D board) to the center.

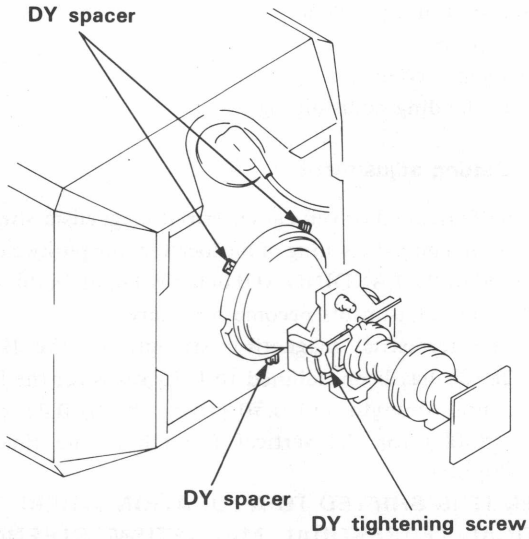

14. Be sure to confirm that the raster does not skew.

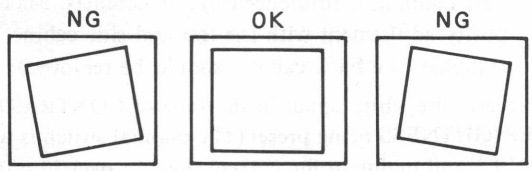

[LANDING ADJ PRESET ADJUSTMENT]

1. Install the cabinet. (Installation by means of screw tightening is unnecessary)
2. Remove the subcontrol panel within the drawer.
3. Be sure to confirm that the set is placed eastward and the white signal has been fed for over 30 minutes.
4. Set ON the LANDING ADJ ON/OFF SW (SW2) on the W board, set OFF the LANDING FINE ADJ ON/OFF SW (SW3) on it, and set the DIRECTION LANDING ADJ SW (SW1) on it to E (4).
5. Adjust with the CUT OFF SELECT on the N board so that it becomes into pure green color.
6. Press the DEGAUSS SW to demagnetize.
7. Adjust by turning the volumes RV9 and RV10 on the W board respectively so that the upper center section of the screen becomes the brightest and uniformly green with the former and the lower center section of the screen becomes the brightest and uniformly green with the latter.

Note: The purity is deviated a little by drawing out the drawer, so perform the adjustment by drawing it as little as possible.

W board

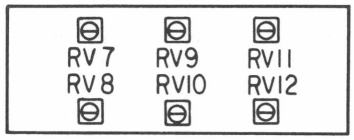

8. Similarly to the above, adjust with RV 7, 8, 11, and 12 so that the upper right and left sides and the lower right and left sides of the screen become bright and uniformly pure green color.
9. Press the DEGAUSE SW to demagnetize.
10. Be sure to confirm that the entire screen is in pure green color.
11. By setting the color of the screen in pure red color with the CUT OFF SELECT on the N board, be sure to confirm that the screen becomes in pure red color. By setting the color of the screen in pure blue color with the CUT OFF SELECT on the N board, be sure to confirm that the screen becomes in pure blue color.
12. When either of the above is not clear enough, repeat the adjustments of steps 6 to 11.

Note: The landing adjustments of steps 7 and 8 can accurately be made by using the beam landing adjustment jig.

[FOCUS ADJUSTMENT]

1. Receive the inverse double crosshatch signal (black in white base) with the internal signal.
2. Adjust with FOCUS VR so that the center of the screen becomes the best focus point.

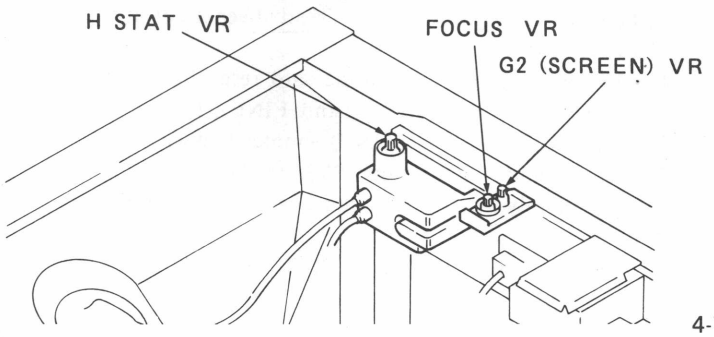

[CONVERGENCE ADJUSTMENT]

Preparation; Set the selection switch SW to HDTV-A mode.

1. Input the crosshatch signal (Internal or external signal)

Note: Take note that there is a possibility that the picture of the internal SG differs in the picture phase from that of the external SG.
It can be matched with H PHASE of the sub control panel (D board).

2. Turn ON (▭) the CONTRAST MANUAL SW on the front panel and adjust with the CONTRAST MANUAL VR so that the crosshatch can be seen with ease.
3. Be sure to confirm that it becomes into a stabilized state after flowing current for over 30 minutes.
4. Reset the digital convergence data of the HDTV-A.
5. Reset the digital convergence data of the normal scan.
6. Press the [MODE] key.

```
CONVER  HDTV-A
COARSE  NO.##  RGB
```

is displayed.

7. Press simultaneously continuously the OPERATE keys [<] and [>] for over 1 second.
It has been completed when

```
   RESET
    COMPLETE
```

is displayed.

8. Reset the FINE data of the convergence.
Press the [MODE], [FORWARD] and [CURSOR/DATA] keys.

```
CONVER  HDTV-A
 FINE   DATA   RGB
```

is displayed.

9. Press simultaneously and continuously the OPERATE keys [<] and [>] for over 1 second.

```
   RESET
    COMPLETE
```

is displayed.

• **Static convergence adjustment (Place the set eastward)**

Note: Since steps 1 to 4 have previously been adjusted, it is unnecessary to adjust other than when replacing the DY.

1. Adjust by turning the center VR (RV29 and RV44) of the V and H convergences of the sub control panel (D board) so that the 3 colors of red, green, and blue become into parallel lines at the center.

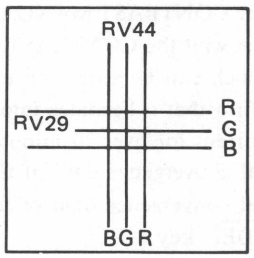

2. At this point, when the color deviation in horizontal direction is small, turn the H.STAT VR within the HV block.
3. Turn the 6-pole magnet ring positioned at the rear of the DY and adjust so that the distance between the red and green and that of blue and green of the 3 colors parallel lines become equivalent. (Alter $\theta 1$ and $\theta 2$.)

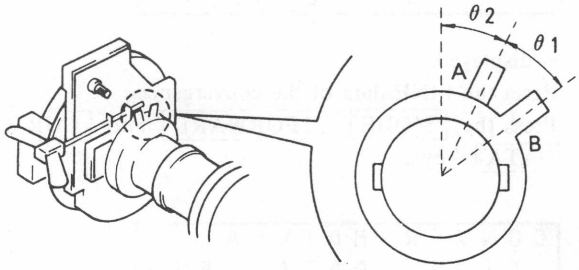

Note: Movement of the correction due to 6-pole magnet ring Generate the magnetic flux of the equivalent amount and equivalent direction against the side beams (blue and red) and change the correction amount by varying the opening angle of the 2 sheets of the magnets and change the correction direction by turning simultaneously the 2 sheets of the magnets to converge the side beams.

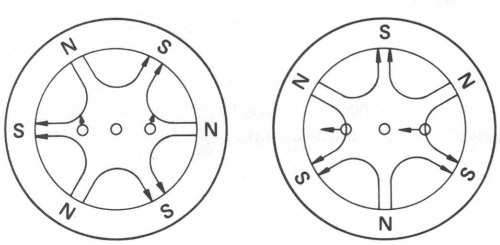

Correction due to 6-pole magnet ring

4. Perform rough adjustment of the convergence with the VR on the sub control panel (D board).
5. Connect probe to the positive pole of C35 on the E board. The parabolic DC level of the V period of a changes when turning the center VR (RV44) of the H convergence on the sub control panel (D board).
   Adjust RV44 so that the upper and lower points of the DC level are not clipped.

Note: Be sure to perform this adjustment when the movement of RV44 is not smooth.

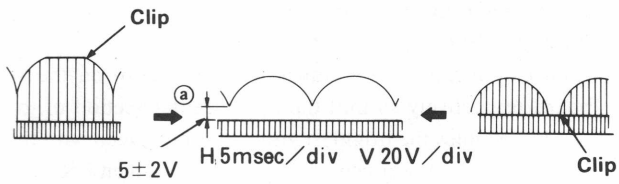

6. Match the horizontal misconvergence at side of the center of the screen by turning the H STAT VR of the HV block.

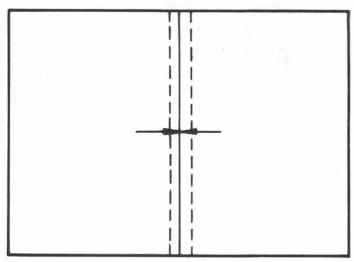

7. Make painted lock of the H STAT VR.

• **Dynamic Convergence (Analog section) Adjustment**

1. Adjust with the convergence VRs on the sub control panel (D board).
2. Each VR corresponds to a screen portion.
3. Red and blue symmetrically moves against green for the adjustment. (Green does not move.)
4. Make the adjustment in the order from the center, Y axis, X axis and to the corners on the screen.

• V-Convergence Phase Adjustment (Normally unnecessary because this adjustment has already been made at the time of shipment.)
  Connect a probe to the Q81 collector on the D board and set the pulse width at 1.5 ± 0.05 μsec by turning RV75 (V-CONV PHASE).

• V-Sub Convergence Adjustment (Normally unnecessary because this adjustment has already been made at the time of shipment.)

1. Select the HDTV A mode and **reset** the digital convergence (both COARSE and FINE). (Refer to P4-7)
2. Turn RV78 (V SUB CONV) counterclockwise fully.
3. Set volume RV22 through RV36 to the mechanical center and closely match the H convergence with RV36 through RV51.
4. Match with RV27 through RV31 (V convergence in the center).

5. Turn RV22 clockwise fully and RV26 counterclockwise fully.
6. Turn RV78 clockwise so that respective R.G.Bs become almost parallel on the left edge.
7. Here, make an analog convergence adjustment again.

Match the R.G.Bs so that they become almost horizontal.

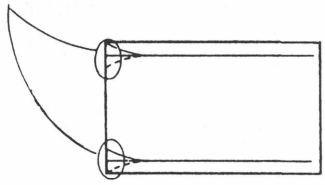

• Convergence Adjustment Procedure

1. Input the cross-hatch signal and select the HDTV A mode.
2. Reset the digital convergence data.
3. Set the CONTRAST MANUAL SW and BRIGHTNESS MANUAL SW on the front panel to ON (⊓), respectively, and turn the corresponding VRs to the appropriate position for easy observation.
4. Match RGB of the screen center with RV29 and RV44.

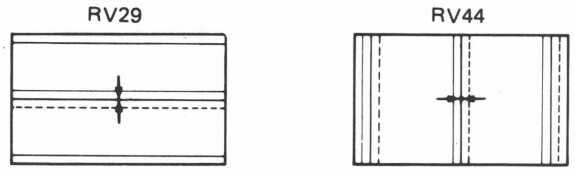

5. Match the respective RGBs of the screen the left and the right (on X axis) from the center with RV24, RV34, RV39 and RV49.

Note: Match first with RV34 and RV49 (on the right side).

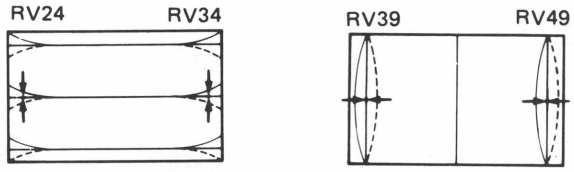

6. Match the respective RGBs of the screen upper and the lower (on Y axis) from the center with RV27, RV31, RV42 and RV46.

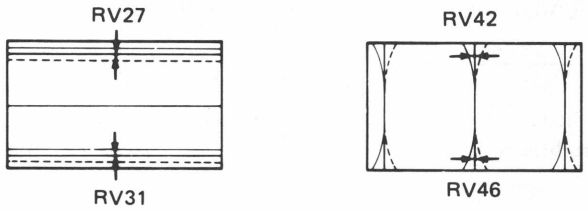

7. Match the respective RGBs of the screen upper middle section and the lower middle section from the center with RV28, RV30, RV43 and RV45.

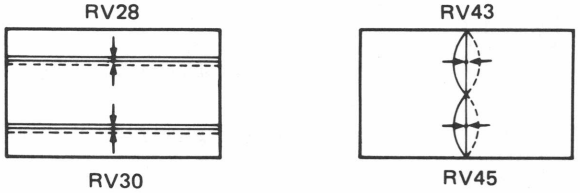

8. Match the respective RGBs of the screen corners with RV22, RV26, RV32, RV36 and RV37, RV41, RV47, RV51.

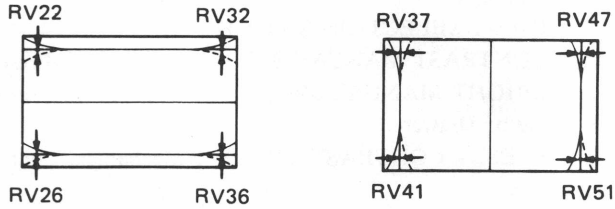

Note: Match first with RV32, RV36, RV47 and RV51 (on the right side).

9. Match the convergences of the screen middle upper left and right and the middle lower left and right with RV23, RV25, RV33, RV35 and RV38, RV40, RV48, RV50.

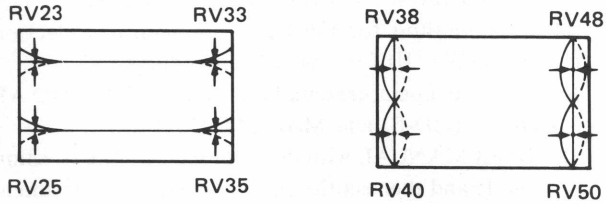

Note: Match first with RV33, RV35, RV48 and RV50 (on the right side).

10. If the convergence is not correct at this time yet, perform the adjustment again from step 4 above.
11. Select the UNDER SCAN mode.
12. Reset the digital convergence data.
13. Match RGB of the screen center upper and the lower with RV52.

    The upper and lower sections move at the same time.

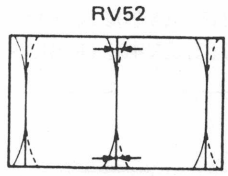

14. Match RGB of the screen center left and right with RV53 and RV57.

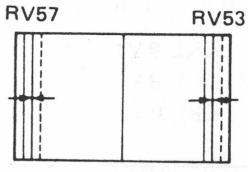

• Digital Convergence Adjustment

Confirm that the mode is set to HDTV A, and then adjust the convergence with the control unit (N board). See Section 1 "OPERATION FOR ADJUSTMENT PROCEDURES".

Resetting and adjusting of the digital convergence are also necessary for the HDTV B and 525PROG.

For the 525PR, first make this adjustment before you make the digital convergence adjustment. After adjusting the screen size, reset the digital convergence and match the H AMP of PROG with RV71.

[G2 ADJUSTMENT]

1. Set SW and VR as follows.
   Front Panel
   INPUT SELECTION SWITCH ..... A CH
   CONTRAST MANUAL SW ..... Preset
   BRIGHT MANUAL SW ..... Preset
   Inside of Drawer
   PRESET CONTRAST VR..... Mechanical Center

2. Reset the PRESET data for color temperature.
   Select the PRESET with the color temperature selection mode and then reset the data with the color temperature adjustment mode and the system selection switch corresponding to INPUT A on the JA board. See the following description of transfer procedures part I for color temperature adjustment modes, part II for data selection method for the color temperature selection mode, and part III for resetting procedures.
3. Reset color temperature data for each MANUAL (HD-A), MANUAL (HD-B) and MANUAL (525PR).
   1) Select MANUAL with the color temperature selection mode and then set the color temperature adjustment mode.
   2) Select the 525PR with the system selection switch on the JA board, then reset the data.
   3) Select the HD-B with the system selection switch on the JA board, then reset the data.
   4) Select the HD-A with the system selection switch on the JA board, then reset the data.
4. Using VR and TP on the CA board, adjust the G1 voltage of each R, G and B at −60V.
   R . . . . TP12, RV2 (R-BIAS 1)
   G . . . . TP212, RV202 (G-BIAS 1)
   B . . . . TP412, RV402 (B-BIAS 1)

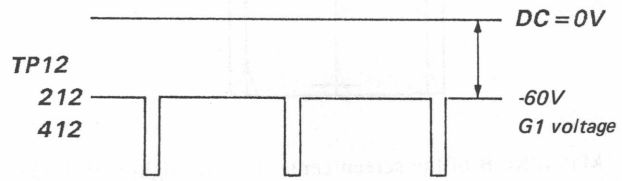

5. Using VR on the CA board and TP on the CB board, adjust the pedestal level of cathode for each R, G and B at +100V.
   R . . . . TP6 (KR), RV1
   G . . . . TP7 (KG), RV2
   B . . . . TP8 (KB), RV3

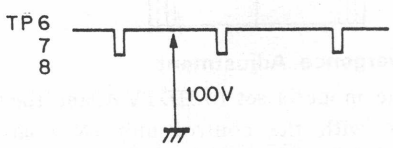

6. Adjust the G2 (SCREEN) VR so that one of the most luminous colors of R, G and B, becomes slightly more luminous than the reset.
7. Paint lock the G2 (SCREEN) VR.

[COLOR TEMPERATURE (PRESET DATA) ADJUSTMENT]

1. Be sure to perform the G2 adjustment before performing the color temperature adjustment. Set SW and VR the same as in the G2 adjustment.
2. Select PRESET as the color temperature selection mode, then set the color temperature adjustment mode. Set the system selection switch on the JA board to the HD-A.
3. Reset the PRESET data.
4. Using the color analyzer, adjust the PRESET data at 6500°K as follows.

4.1. BIAS 1 ADJUSTMENT

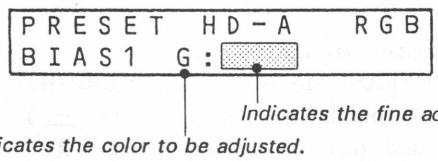

Adjust as follows using RV on the CA board and the key of control unit.

Color Temperature 6500K
Luminance 0.5nit

Coarse adjustment

R Adjustment	RV2 on CA board
G adjustment	RV202 on CA board
B Adjustment	RV402 on CA board

Fine adjustment

R Adjustment	After pressing the RED COLOR SELECT key, press the OPERATE keys < and > .
G Adjustment	After pressing the GREEN COLOR SELECT key, press the OPERATE keys < and > .
B Adjustment	After pressing the BLUE COLOR SELECT key, press the OPERATE keys < and > .

When the OPERATE key < is pressed, the screen gets darker. When > is pressed, the screen gets brighter. Adjust the brightness as much as possible using the coarse VR control.

4.2. GAIN ADJUSTMENT

Press the FORWARD FUNCTION key to obtain the following display.

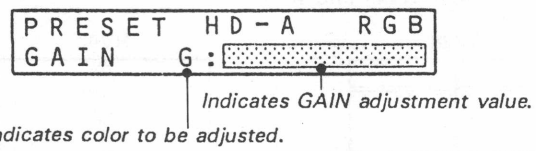

Adjust as follows using the control unit.

Color Temperature 6500K
Luminance 60nit

R Adjustment	After pressing the [RED] COLOR SELECT key, press the OPERATE keys [<] and [>].
G Adjustment	After pressing the [GREEN] COLOR SELECT key, press the OPERATE keys [<] and [>].
B Adjustment	After pressing the [BLUE] COLOR SELECT key, press the OPERATE keys [<] and [>].

4.3. Press the [BACK] FUNCTION key to set to the BIAS 1 adjustment mode, and re-adjust the color temperature of the black level.
Repeat steps 4.2 and 4.3 until a optimum color temperature is obtained.

4.4. BIAS 2 Adjustment
Press the [FORWARD] FUNCTION key to obtain the following display.

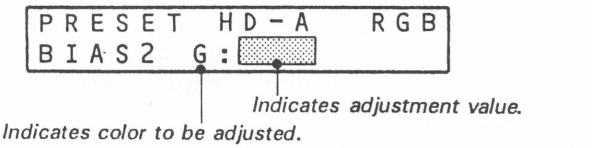

Adjust as follows using the control unit on the CA board:

Color Temperature 6500K
Luminance 0.5nit

Use the following keys for adjustments.

R Adjustment	After pressing the [RED] COLOR SELECT key, press the OPERATE keys [<] and [>].
G Adjustment	After pressing the [GREEN] COLOR SELECT key, press the OPERATE keys [<] and [>].
B Adjustment	After pressing the [BLUE] COLOR SELECT key, press the OPERATE keys [<] and [>].

4.5. Press the [BACK] FUNCTION key to set to the GAIN adjustment mode and re-adjust the color temperature of the white level. Repeat the steps 4.5 and 4.6 until a optimum color temperature is obtained.

4.6. Press the [MODE] key to release the color temperature adjustment mode.

[COLOR TEMPERATURE (MANUAL HD-A DATA) ADJUSTMENT]

1. Adjust the color temperature (PRESET data) to bring the PRESET data for 6500K, and then perform the following adjustments.
2. Select MANUAL as the color temperature selection mode and then set the color temperature adjustment mode.
   Set the system selection switch on the JA board to the HD-A.
3. Reset the MANUAL (HD-A) data.
   By doing this, the PRESET data is transferred to the MANUAL (HD-A).
4. Press the MODE key to release the color temperature adjustment mode.

[COLOR TEMPERATURE (MANUAL 525PR DATA) ADJUSTMENT]

1. Select MANUAL as the color temperature selection mode and then set the color temperature adjustment mode.
   Set the system selection switch on the JA board to the HD-B.
2. Reset the MANUAL (HD-B) data.
3. Adjust the MANUAL (HD-B) data with the color analyzer and set the color temperature at 9300K as follows.

3.1. BIAS 1 ADJUSTMENT

Adjustment as follows using the control unit.

Color Temperature 9300K
Luminance 0.5nit

R Adjustment	After pressing the [RED] COLOR SELECT key, press the OPERATE keys [<] and [>].
G Adjustment	After pressing the [GREEN] COLOR SELECT key, press the OPERATE keys [<] and [>].
B Adjustment	After pressing the [BLUE] COLOR SELECT key, press the OPERATE keys [<] and [>].

3.2. GAIN ADJUSTMENT
Press the [FORWARD] FUNCTION key to obtain the following display.

```
MANUAL  HD-B    RGB
GAIN    G:▒▒▒▒
```

Adjust as follows using the control unit.
Color Temperature 9300K
Luminance 60nit

R Adjustment	After pressing the [RED] COLOR SELECT key, press the OPERATE keys [<] and [>] .
G Adjustment	After pressing the [GREEN] COLOR SELECT key, press the OPERATE keys [<] and [>] .
B Adjustment	After pressing the [BLUE] COLOR SELECT key, press the OPERATE keys [<] and [>] .

3.3. Press the [BACK] FUNCTION key to select the BIAS 1 adjustment mode, then re-adjust the color temperature of the black level.
Repeat the steps 3.2 and 3.3 until the optimum color temperature is obtained.

3.4. BIAS 2 Adjustment
Press the [FORWARD] FUNCTION key to obtain the following display.

```
MANUAL  HD-B    RGB
BIAS2   G:▒▒▒▒
```

Adjust as follows using the control unit.
Color Temperature 9300K
Luminance 0.5nit

R Adjustment	After pressing the [RED] COLOR SELECT key, press the OPERATE keys [<] and [>] .
G Adjustment	After pressing the [GREEN] COLOR SELECT key, press the OPERATE keys [<] and [>] .
B Adjustment	After pressing the [BLUE] COLOR SELECT key, press the OPERATE keys [<] and [>] .

3.5. Press the [BACK] FUNCTION key to select the GAIN adjustment mode, then re-adjust the color temperature of the white level.
Repeat steps 3.4 and 3.5 until the optimum color temperature is obtained.

3.6. Press the MODE key to release the color temperature adjustment mode.

4. Select MANUAL as the color temperature selection mode, then set to the color temperature adjustment mode.
Set system selection switch on the JA board to 525PR.
5. Copy the MANUAL (HD-B) data on the MANUAL (525PR). (See the following description, part III for copying method.)

[COLOR TEMPERATURE (MANUAL HD-B DATA) ADJUSTMENT]

The adjustment procedure is same as for MANUAL (HD-A), except that the system selection switch on the JA board is changed to HD-B.

[SETTING THE PRESET BRIGHTNESS AND PRESET CONTRAST ADJUSTMENT CONTROL]

1. Change the CONTRAST MANUAL switch and the BRIGHT MANUAL switch on the front panel to the preset positions. Change the system selection switch on the JA board to HD-A.
2. Display on the screen the PLUGE internal test signal. Adjust the brightness using the PRESET BRIGHT adjustment control on the JA board, so that the −2% portion and 0% portion become indistinguishable.

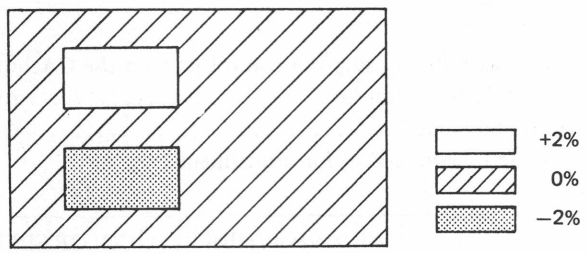

3. Display on the screen the FLAT FIELD internal test signal. Adjust the contrast with the PRESET CONTRAST adjustment control on the JA board using the luminance meter, so that the luminance becomes 60nit.

I. Changeover in Adjustment Modes

The adjustment modes are changed over with the keys on the N board as illustrated below.
For G2 adjustment and color temperature adjustment, the color temperature selection mode and the color temperature adjustment mode are used.

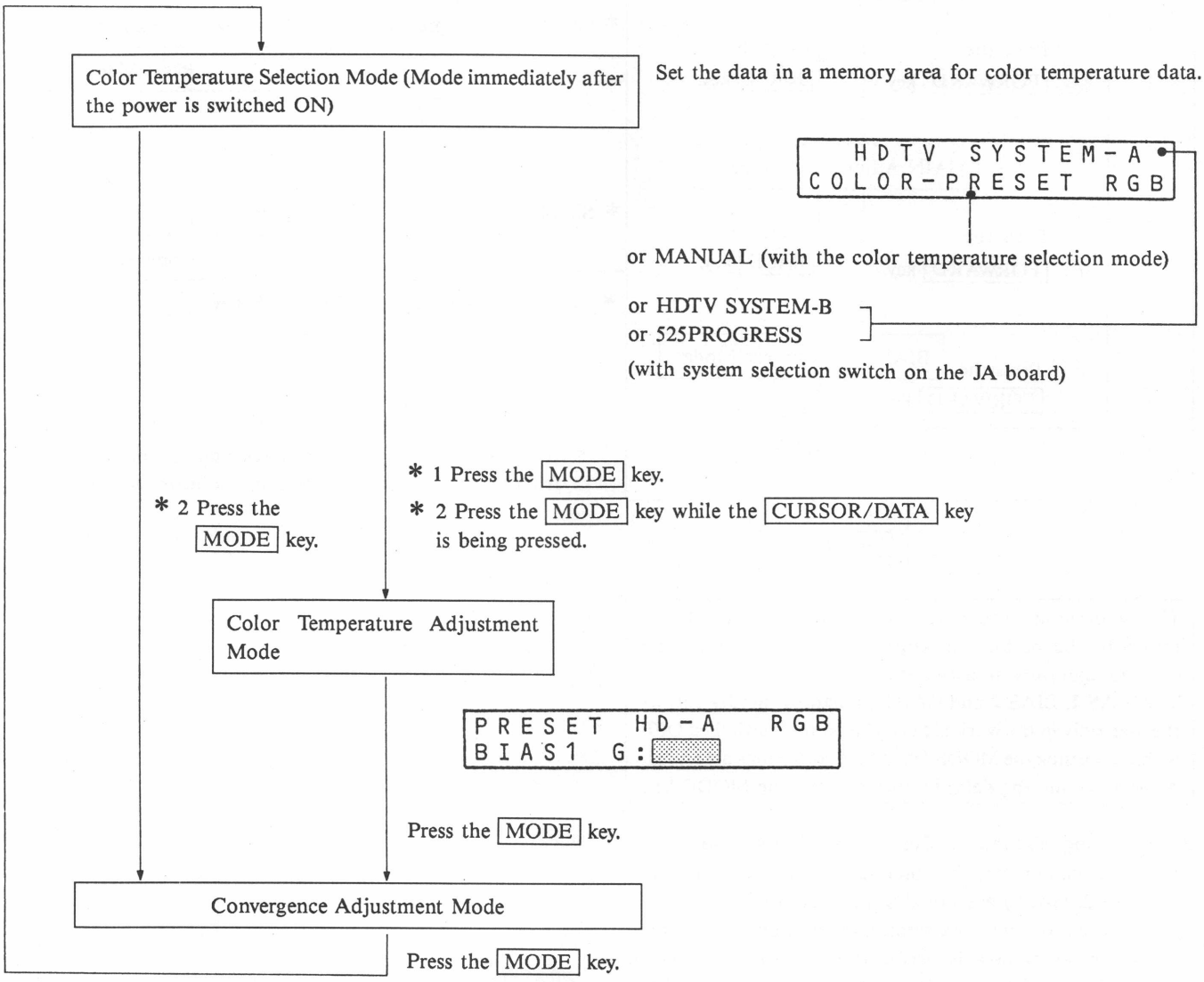

*1 When MANUAL is selected as the color temperature selection mode.

*2 When PRESET is selected as the color temperature selection mode.

Color Temperature Adjustment Mode

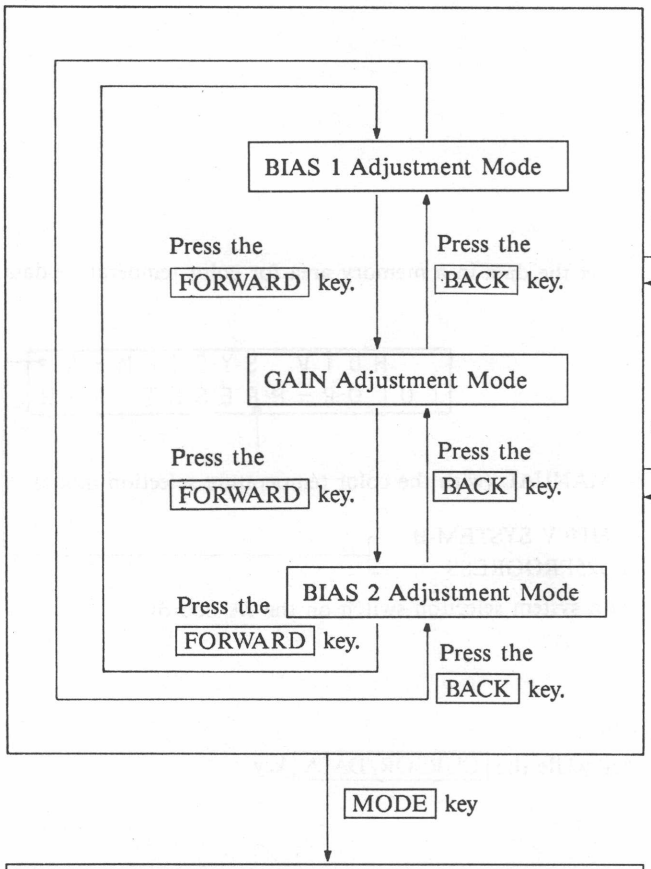

* Simultaneously press the OPERATE keys [<] and [>].

Reset Mode

Automatic Return

* Simultaneously press the OPERATE keys [^] and [v].

Copy Mode

* Simultaneously press the OPERATE keys [^] and [v].

* It is possible to change to the reset mode or the copy mode from any of the color temperature adjustment modes.

The color temperature data in the work area are transferred to the battery backuped memory to release the color temperature adjustment data.
The BIAS 1, BIAS 2 and GAIN adjustment modes correct the data only in the work area. If the power is switched OFF without pressing the MODE key, all the corrections are erased. After adjusting the data, be sure to press the MODE key.

II. Selecting Method for Color Temperature Data

In this equipment, the color temperature data (BIAS 1, BIAS 2, GAIN) are stored in the memory unit.
There are four memory areas, and selection of the data in each memory area is performed by setting the system selection switch (HD-A/HD-B/525PR) on the JA board and setting the color temperature selection mode.

		Setting the OPERATE Keys in Color Temperature Selection Mode	
		[<]	[>]
Setting system selection switch on the JA board	HD-A	PRESET data (6500K at the time of shipment)	MANUAL (HD-A) data (6500K at the time of shipment)
	HD-B		MANUAL (HD-B) data (6500K at the time of shipment)
	525PR		MANUAL (525PR) data (9300K at the time of shipment)

It takes some time before the system changes even if system selection switch is set. This does not mean the equipment has failed.

III. Resetting and Copying the Color Temperature Data It is possible to reset and copy the color temperature data in each memory area.
All the data (BIAS 1, BIAS 2 and GAIN data for R, G and B respectively) in the memory area are simultaneously reset and copied. The resetting and copying methods are referred to in "I-5-4. Resetting of Adjustment Data" and "Copying of Color Temperature" in "I-5-2. Color Temperature Adjustment".

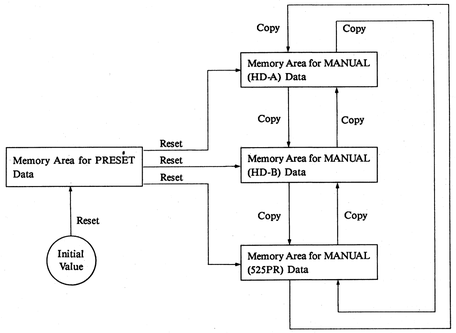

D board

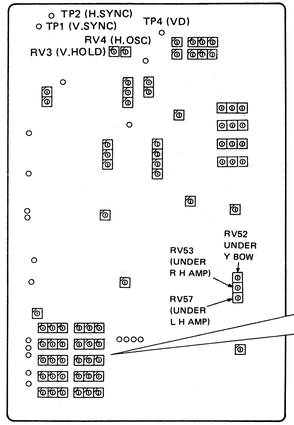

CB board

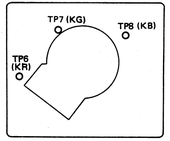

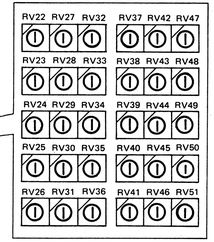

CA board

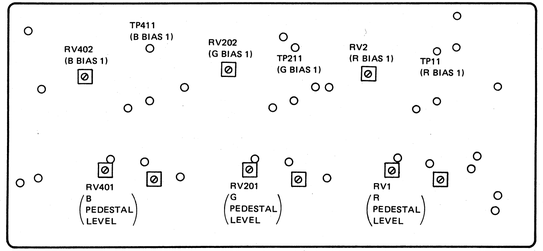

FRONT PANEL

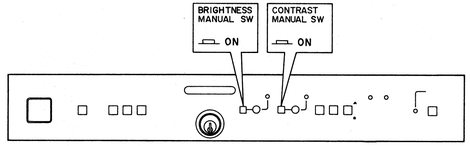

SUB CONTROL PANEL

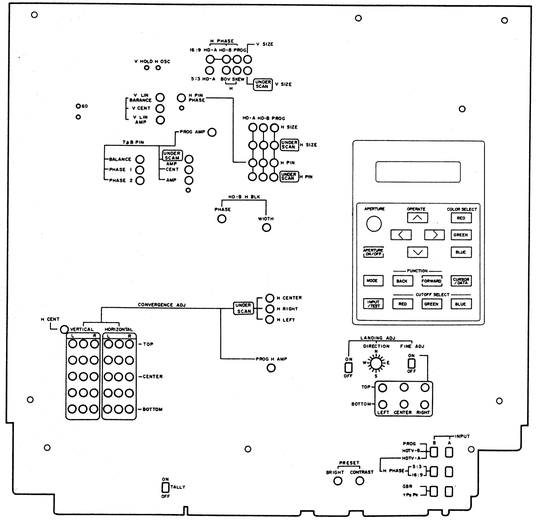

HIGH VOLTAGE ADJUSTMENT

High voltage adjustment is necessary when the components shown below are replaced. Use a high voltage meter for the adjustment.

High voltage blocks, D40, R114, R115, R116, R184 and RV2

1. Receive the white signal and make VR into PRESET mode.
2. Connect a high voltage meter to the anode cap.
3. **Adjust RV2 (VRV) to HV=30 ±0.2 kV**
4. Switch the signal between white and black and be sure the high voltage deviation is less than 0.05kV.

Note: If a high voltage meter is not available, adjust the TP7 **(VRV) voltage to 8.40 ±0.05VDC with RV2. Switch the** signal alternately and be sure there is no deviation in screen size.

CONFIRMATION OF HIGH VOLTAGE CIRCUIT COMPONENT REPLACEMENT

The specified condition must be satisfied when the following components are replaced:

E board

D40	μPC574J.HZT33-02 ★◪	TP8: Within 32.2±1.3VDC
R184	22k±1% ◪	**TP7: Adjustable to 8.40 $^{+0.15}_{-0.20}$ VDC**
R114	Adjustment resistor ★◪	**Must be less than 8.70 VDC at RV2 max.**
R115	Adjustment resistor ★◪	
R116	10k±1% ◪	
RV2	2k±10% ◪ Metal grace VR	
R183	Adjustment resistor ★◪	TP5: Within 8.90 $^{+0.05}_{-0.10}$ VDC
R140	Adjustment resistor ★◪	
R141	Adjustment resistor ★◪	
R144	10k±1% ◪	
D39	μPC574J.HZT33-02 ◪	
D48	RD6.2EN ★	D48 cathode voltage: Within 6.0±0.50VDC
Power supply (TK18)		TP2: Within 115±1VDC
HV block, K board, E board		1. Operation confirmation of the high voltage regulator
D45, R145, 146, E board IC5, R142, 143		2. Confirmation of the HV protector
D44, R139, D54 IC6, E board		3. Confirmation of the Ik protector II
D43, IC5, R137, E board		4. Confirmation of the Ik protector I

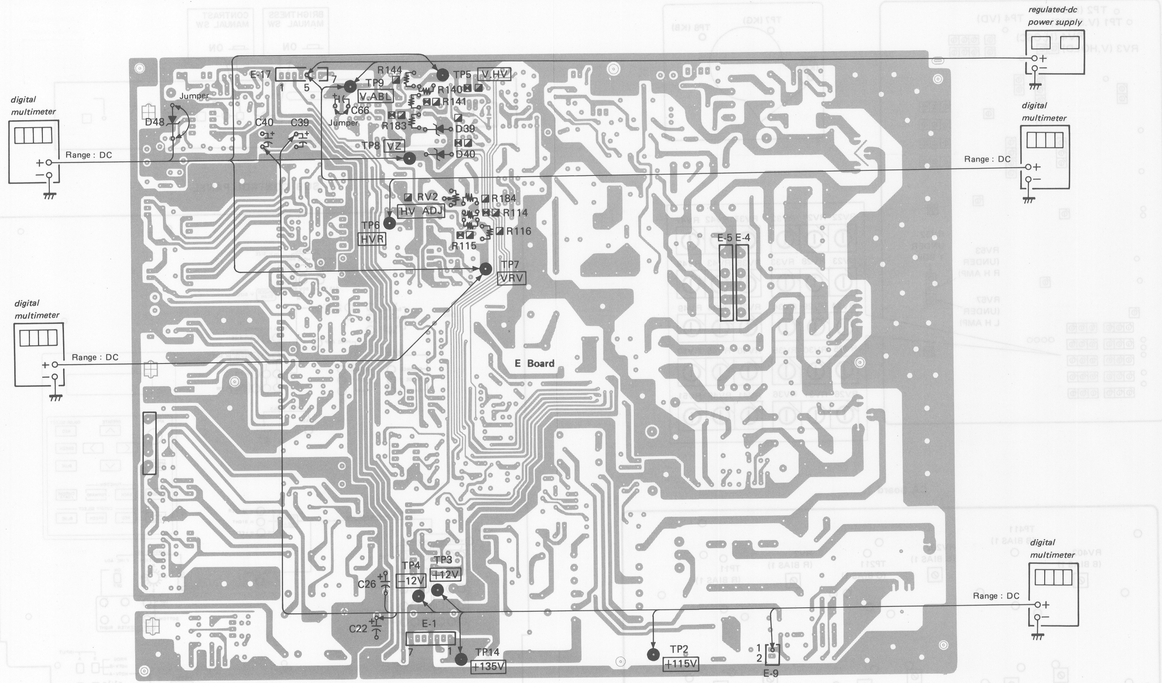

CONFIRMATION OF HIGH VOLTAGE PROTECTION CIRCUIT

1. **Operation Confirmation of High Voltage Regulator**
   - **HV must be 30 ±0.2 kV.** (Further, switch the signal from white to black.)
   - **The TP6 (HVR) voltage must be 8.40 $^{+0.09}_{-0.40}$ VDC**
2. **Confirmation of High Voltage Hold-down Circuit**
   - **The voltage of pin ⑥ of the connector E-17 must be 8.40 $^{+0.09}_{-0.40}$ VDC.**
   - **The raster should not be erased when 8.6 to 8.7 VDC is** applied to pin ③ of the connector E-17 from the external DC power supply. The hold-down circuit **should be active erasing the raster when 9.0 to 9.1 VDC** is applied.
3. **Confirmation of Ik Protector Circuit I**
   - When between A and K of D48 is short-circuit and 7.9 to 8.0V is applied from the external DC power supply to TP-9 (ABL), the protector circuit operates and the raster disappears.
4. **Confirmation of Ik Protector Circuit II**
   - When the both ends of C66 is short-circuit and 4.9 to 5.0V is applied from the external DC power supply to TP-9, the protector circuit operates and the raster disappears.

VOLTAGES OF RESPECTIVE SECTIONS ON E BOARD

The voltages of the respective sections must be as follows (in the white signal preset condition):

1. Pin ① of the connector E-1 (TP14 135V): 135±1VDC
2. Pin ② of the connector E-1 (TP2 115V): 115±1VDC
3. Pin ⑤ of the connector E-1 (TP3 12V): 12±0.6VDC
4. Pin ⑥ of the connector E-1 (TP4 −12V): −12±0.6VDC
5. C22 ⊕ pole: 21±1VDC
6. C26 ⊖ pole: −21±1VDC
7. C39 ⊕ pole: 33±1.5VDC
8. C40 ⊖ pole: −33±1.5VDC
9. Pin ① of the connector E-9: −131±9VDC

5. **Confirmation of H STOP**
1) Disconnect either connector E-4 or E-5 and turn on the power supply.
2) Be sure that the high voltage protector operates and the raster does not appear.
6. **Confirmation of V STOP**
1) Remove connector E-14 and set the power supply ON.
2) Be sure that the high voltage protector operates and the raster disappears.

4-7. CIRCUIT ADJUSTMENT

CONNECTION METHOD DURING BOARD ADJUSTMENT AND SETTING OF SW

Unless otherwise specified in the following pages, the connection method and switch setting of SW must be made as follows: When only HDTV A is used, it is unnecessary to make adjustments needed for HDTV B or PR.

SETTING POSITIONS OF SWITCHES AND CONTROL KNOBS

FRONT PANEL

1. INPUT switch ..... A (⊓) — JA board
2. SYNC switch ..... INT (⊓)
3. MODE switch ..... COLOR (⊓) — JA board
4. CONTRAST MANUAL switch ..... PRESET (⊓) — JA board
5. BRIGHTNESS MANUAL switch ..... PRESET (⊓) — JA board
6. SCAN MODE V DELAY switch ..... OFF (⊓) — JB board
7. SCAN MODE H DELAY switch ..... OFF (⊓) — JB board
8. SCAN MODE UNDER switch ..... OFF (⊓) — JB board

SUB CONTROL PANEL

9. Control unit ..... Initial condition — N board
   With the internal signal (at the power on time): TEST MODE
10. LANDING ADJ ON/OFF switch (SW2) ..... ON — W board
11. LANDING ADJ DIRECTION switch (SW1) ..... Match to monitor setting direction. — W board
12. LANDING FINE ADJ ON/OFF switch (SW3) ..... OFF — W board
13. INPUT A MODE SELECT switch (SW102) ..... GBR — JA board
14. INPUT B MODE SELECT switch (SW101) ..... GBR — JA board
15. INPUT A H PHASE SELECT switch (SW109) ..... 16:9 — JA board
16. INPUT B H PHASE SELECT switch (SW108) ..... 16:9 — JA board
17. INPUT A SYSTEM SELECT switch (SW113) ..... HDTV A — JA board
18. INPUT B SYSTEM SELECT switch (SW110) ..... HDTV A — JA board
19. TALLY switch (SW5) ..... OFF — JB board

FRONT PANEL

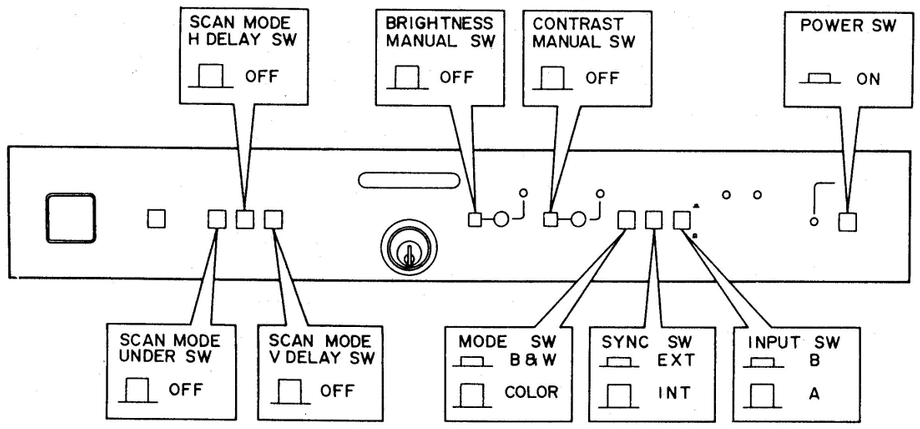

SUB CONTROL PANEL

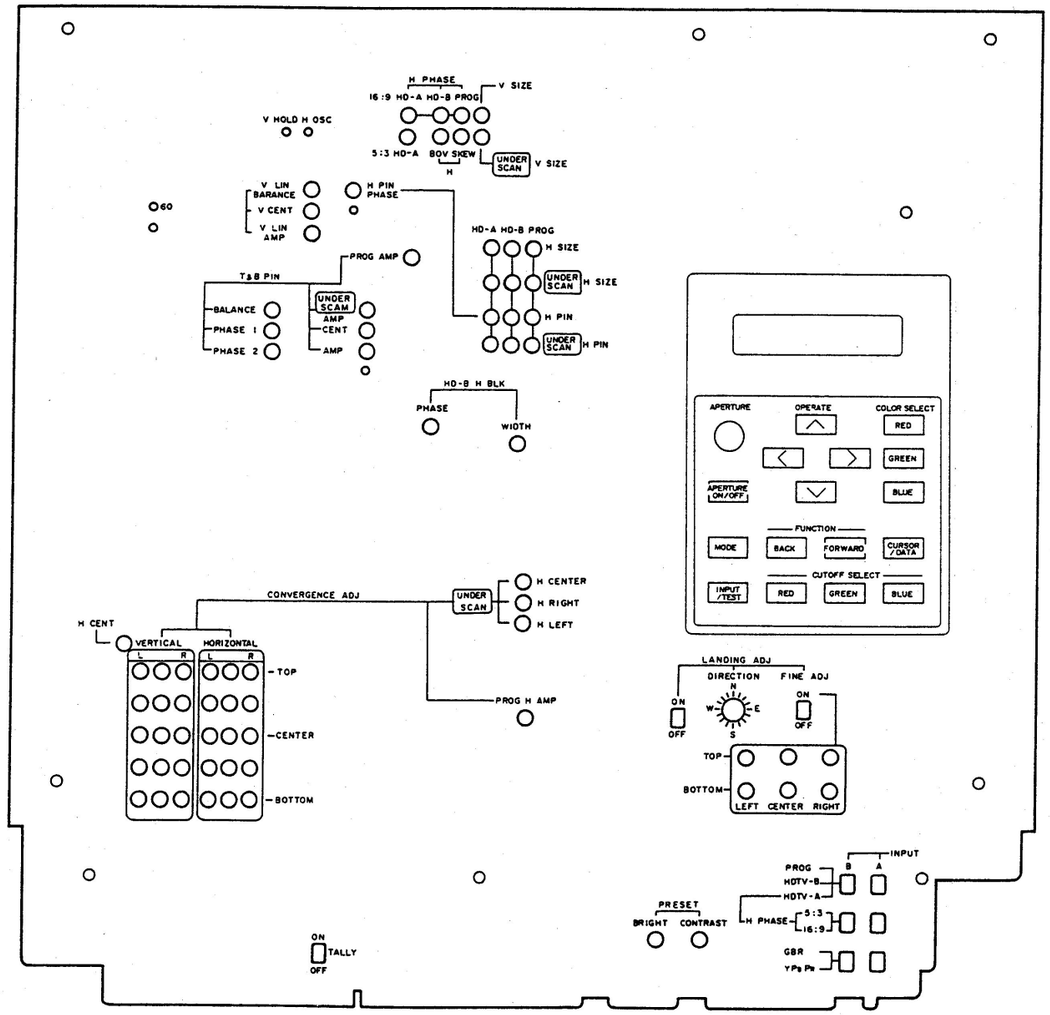

1. D AND DA, DB, E, R, W BOARDS ADJUSTMENT

D BOARD fo ADJUSTMENT

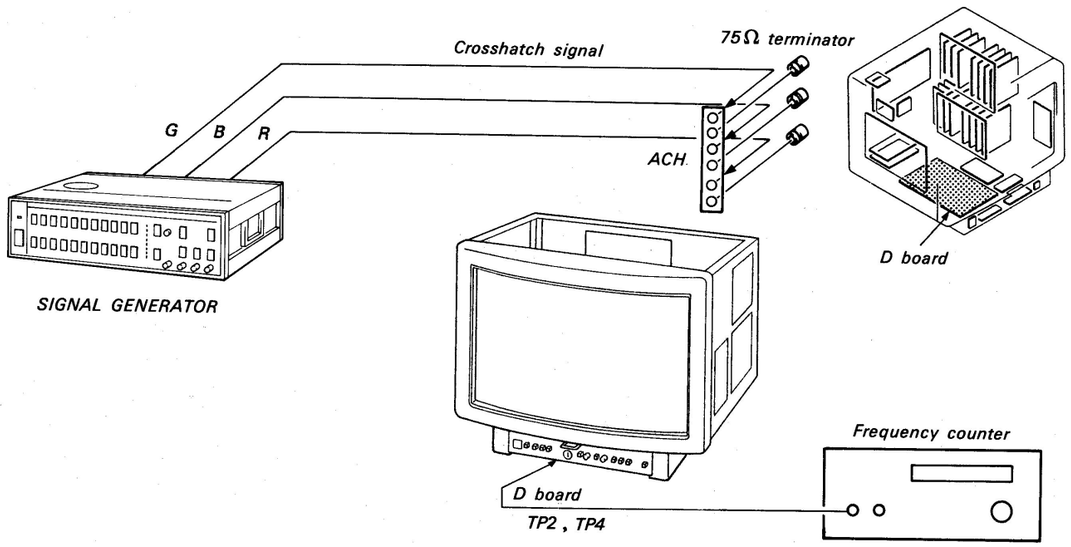

Set to the HDTV A mode.

1. Input signal from external SG.
2. Set to GND with clip the TP2 (H SYNC) of D board, and adjust with RV4 (H OSC) so that the image moving sideways stops.
3. Set to GND with clip the TP1 (V SYNC) and adjust with RV3 (V HOLD) so that the vertical frequency of the TP4 (VD) becoms 55±1.0Hz when the frequency counter is connected to TP4 (VD).

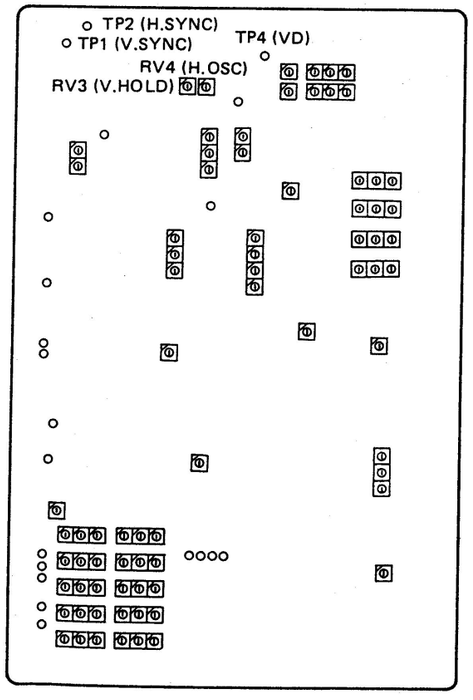

D BOARD V LAMP ADJUSTMENT

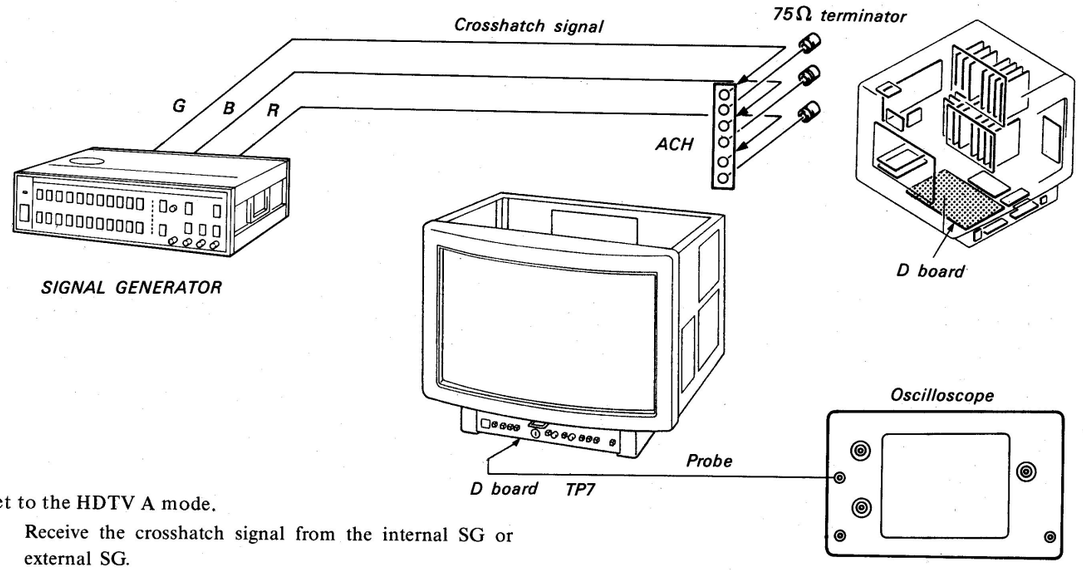

Set to the HDTV A mode.

1. Receive the crosshatch signal from the internal SG or external SG.

Note: The picture phase may be different from the internal SG and the receiver image. This phase difference can be matched with HDA H PHASE 16:9 (RV1) or HDA H PHASE 5:3 (setting is by SW on JA board) (RV2) on the subcontrol panel D board.

2. Connect the probe to pin ⑦ (TP7) V.PRA of IC7 of D board, and adjust the VR of 60 (RV5) to display the waveform as shown below.

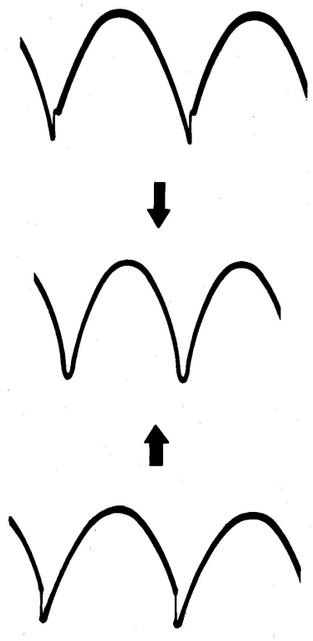

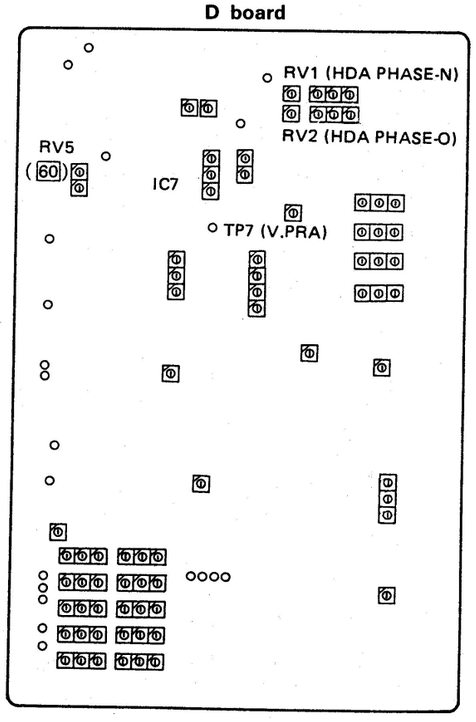

E BOARD H SUB PIN ADJUSTMENT

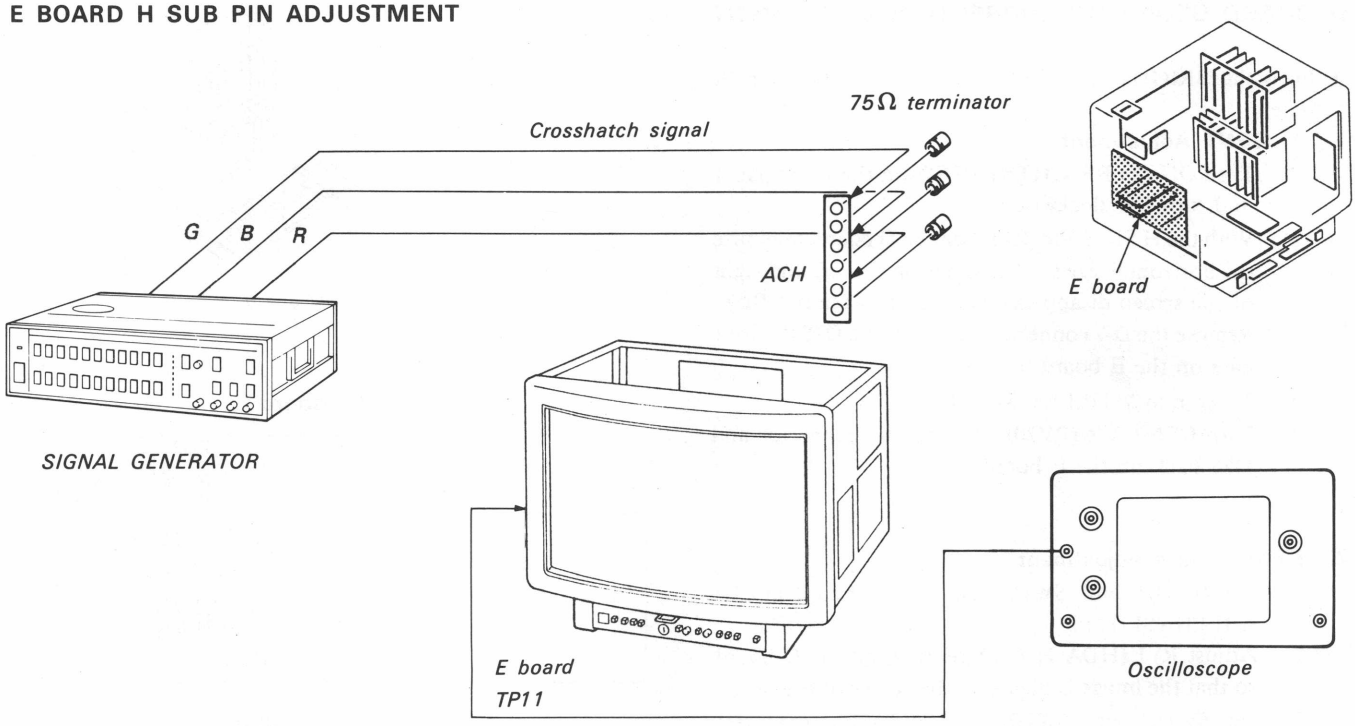

1. Receive a cross hatch signal (internal HDTV A signal or external signal)
2. Connect probe to TP11 (Q41 collector) on E board.
3. Adjust with RV3 (SUB H SIZE) on E board so that it becomes approximately 4.0 VDC.

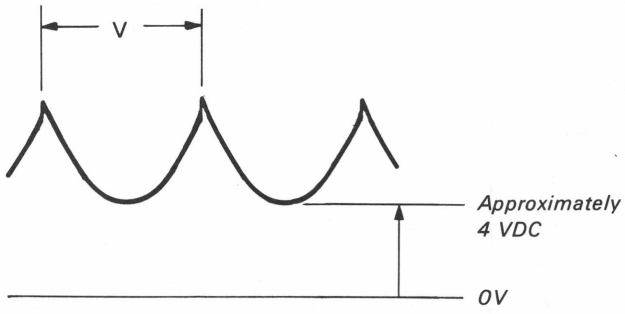

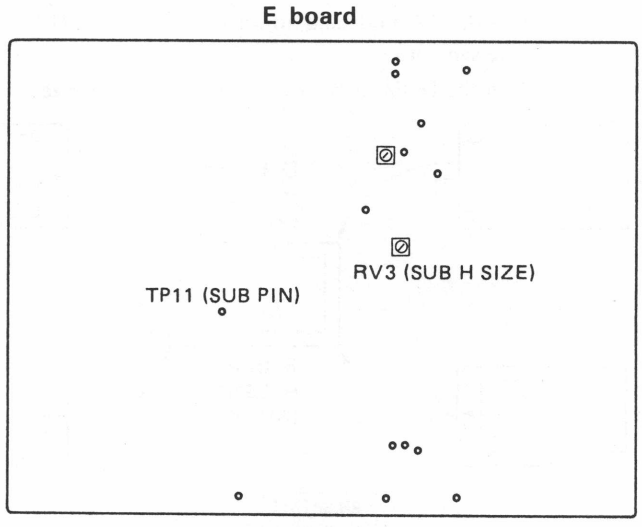

D BOARD GEOMETRY CORRECTION ADJUSTMENT

- Press the BRIGHTNESS MANUAL SW. (in the lamp lit state)

1. H CENT Adjustment

1) Turn ON the BRIGHTNESS SW on the front panel and turn VR clockwise.
2) With the H SIZE VR (RV15) on the D board, minimize the horizontal size so that raster on the left and right of the screen disappears. (It is best to remove BLK. Remove the D-7 connector and lower the D75 thyristor gate on the E board to GND.)
3) Make into V DELAY MODE.
4) Turn CENT VR (RV70). Put the D-7 connector and D75 back on the E board.

2. Picture Phase Adjustment

1) Set SW101 and SW102 on the JA board at HD A H PHASE 16:9.
2) Adjust RV1 (HDA H PHASE 16:9) on the D board so that the image is placed in the center of the raster.
3) Set SW101 and SW102 on the JA board at HD A H PHASE 5:3.
4) Adjust RV2 (HDA H PHASE 5:3) on the D board so that image is placed in the center of the raster.

Note: Perform adjustment of the picture phase with the external input signal to be actually used.

Note: When the phase of HD, VD and EXT SYNC differs, see the HD and H. SYNC phase adjustment in page 4-44.

5) Select the HDTV SYSTEM B mode to feed the input signal and adjust with RV72 (HDB H PHASE) as described above.
6) Select the PR mode and adjust with RV73 (PR H PHASE) in the same way.
7) When the H size is reduced, adjust to correct size.

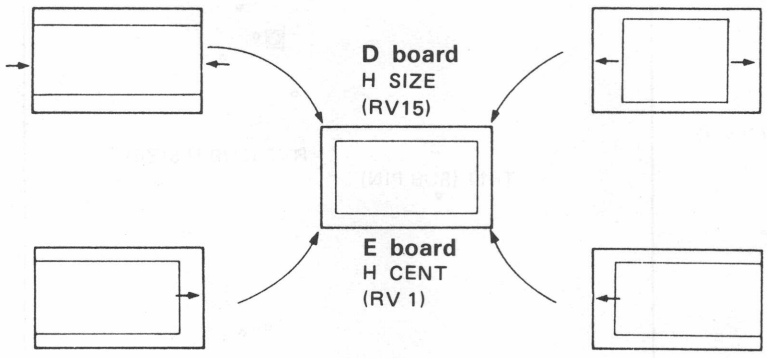

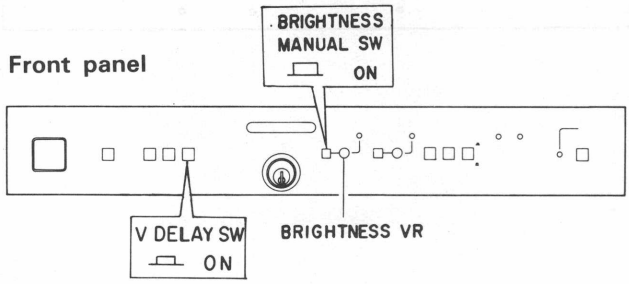

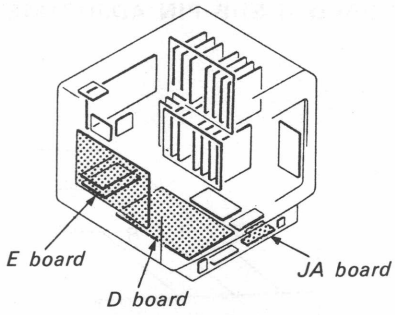

JA board

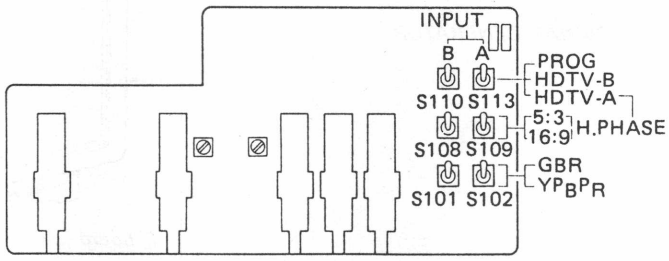

D board

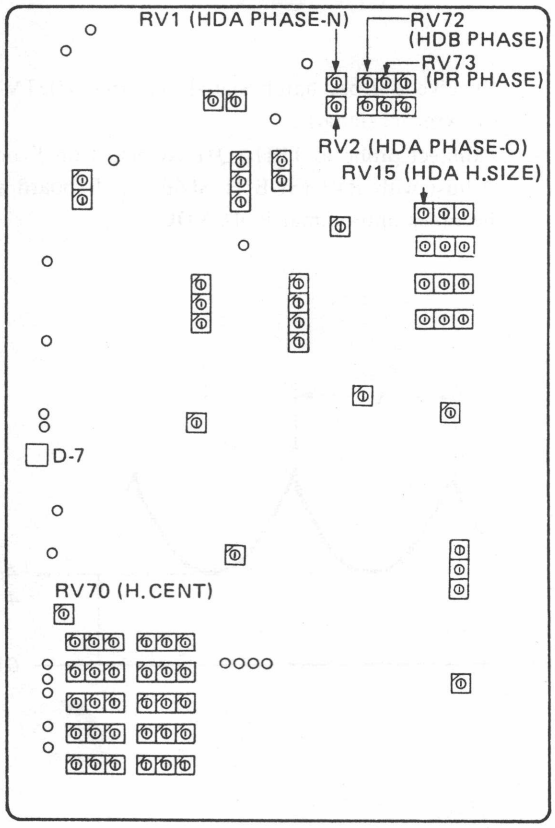

D BOARD HORIZONTAL BLANKING ADJUSTMENT

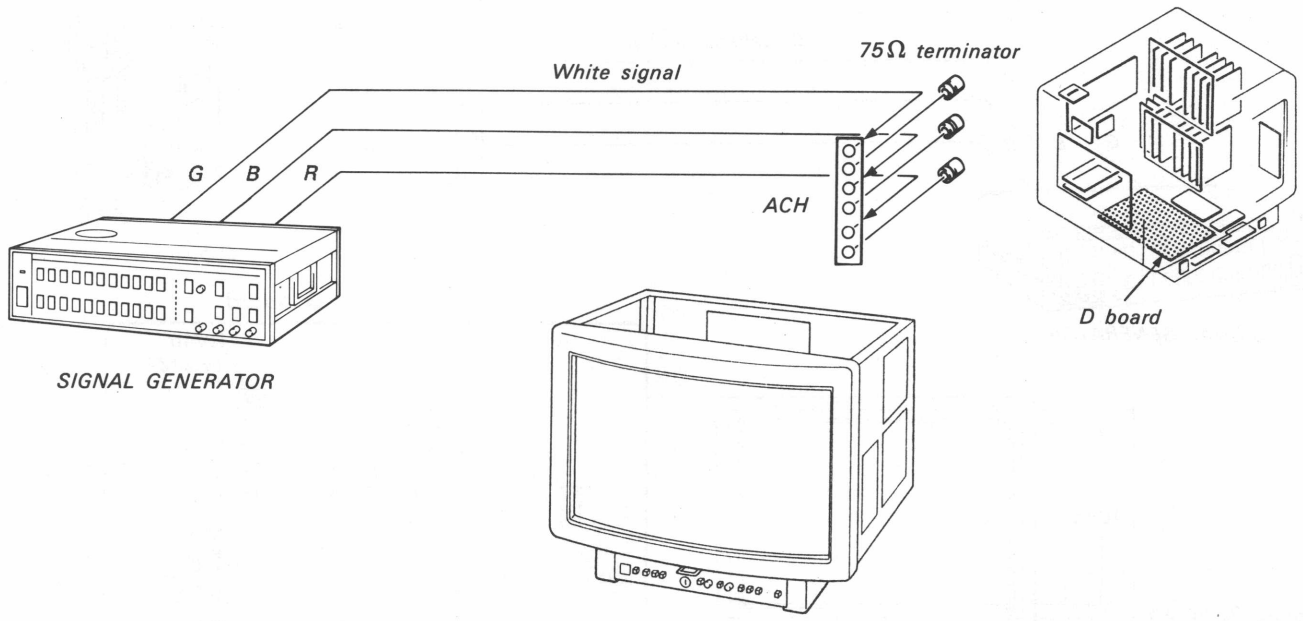

1. Receive the white signal on the picture tube. (internal or external signal)
2. Set to HDTV B. Adjust the horizontal blanking so that the picture occupies the full screen while engaging tracking of HDB H BLANKING WIDTH (RV77) with HDB H BLANKING PHASE (RV76) on the D board. Adjustment is easier with a shorter H size. Return to the original (HDB H RV16) after adjusting.

Adjust the width of the horizontal blanking.

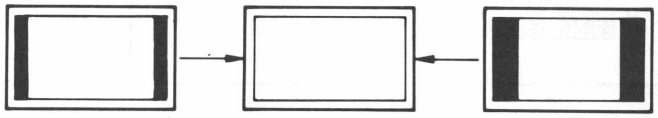

H BLK WIDTH (RV77)

Adjust the phase of the horizontal blanking on both sides.

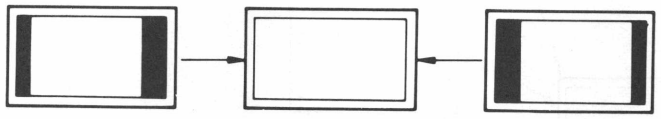

H BLK PHASE (RV76)

No adjustment is necessary for other systems.

D board

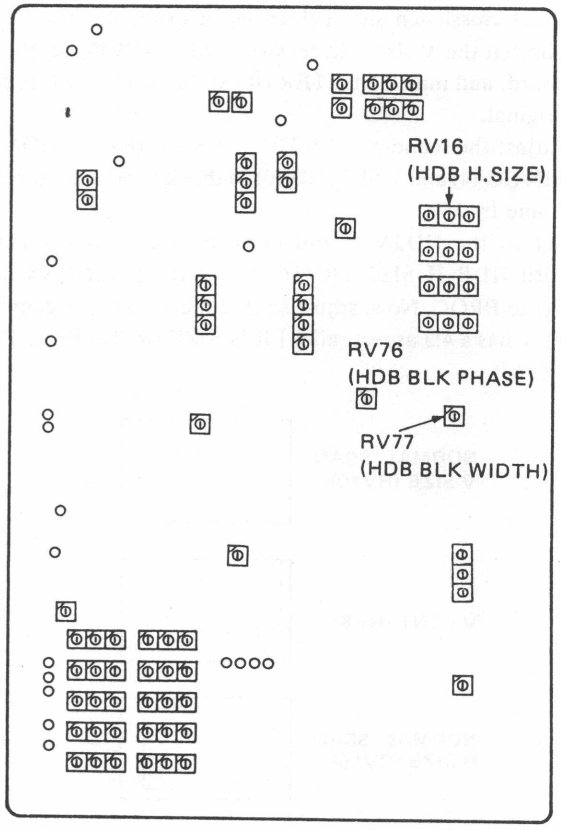

D BOARD HORIZONTAL AND VERTICAL SIZES ADJUSTMENT

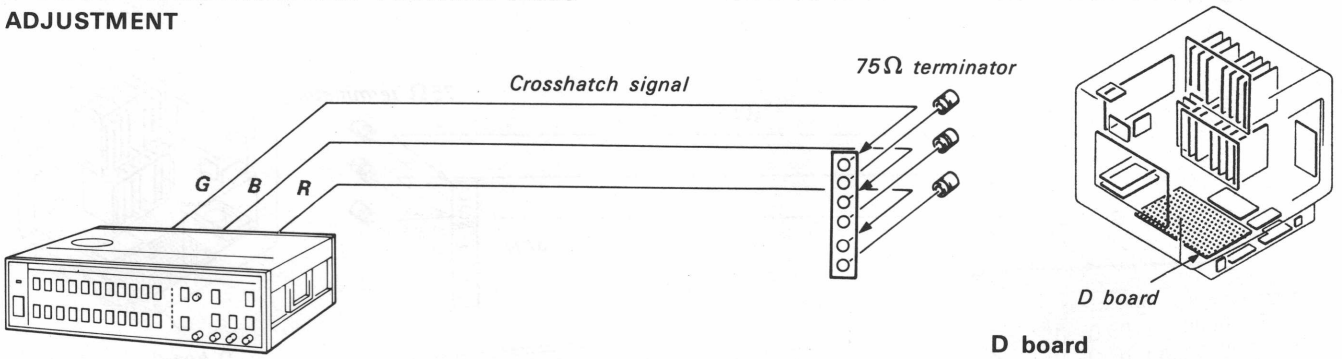

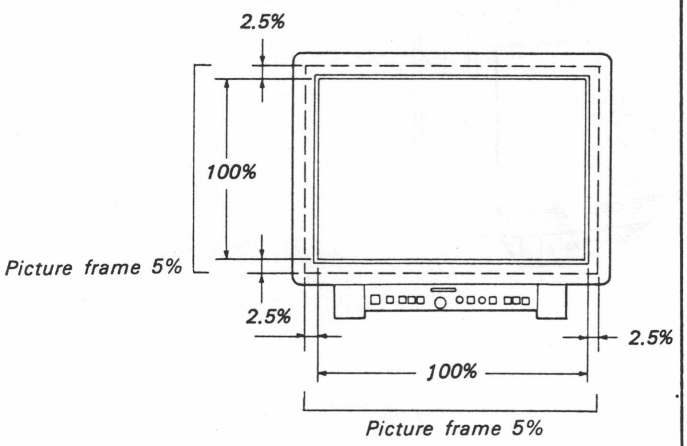

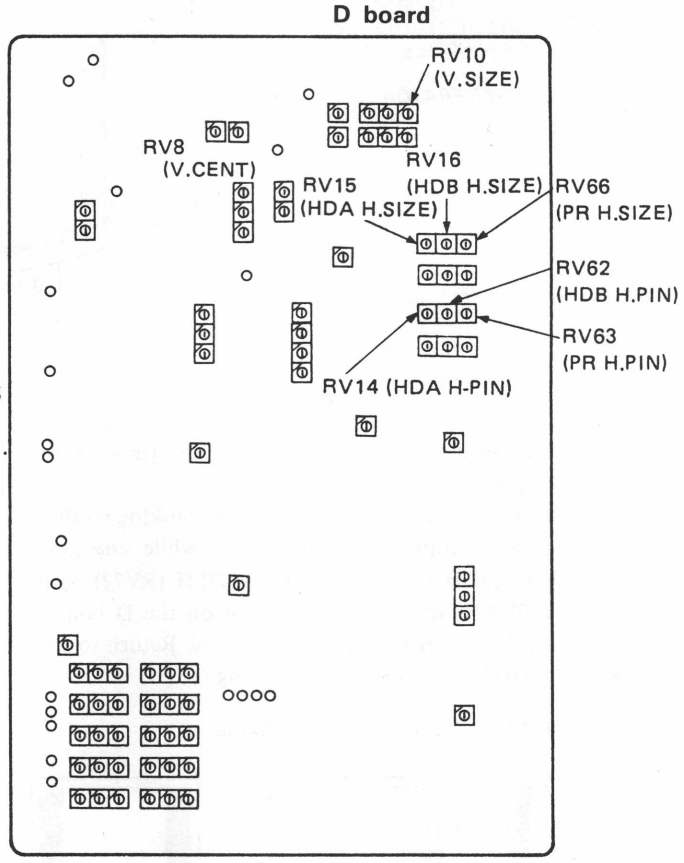

Set to the HDTV A.

1. Input crosshatch signal (internal or external signal).
2. Shorten the V size a little with V SIZE (RV10) on the D board, and match CENTER (RV8). Return V SIZE to the original.
3. Adjust the scanning with HDA H SIZE (RV15), HDA H PIN (RV14) and V SIZE (RV10) so that it exceeds the picture frame by 5%.
4. Set to the HDTV B and perform similar adjustments with HDB H SIZE (RV16) and HDB H PIN (RV62).
5. Set to PROG. Now, adjust so that the 5% H overscanning of V has a 4:3 aspect ratio. PR H SIZE (RV66) PR H PIN (RV63).

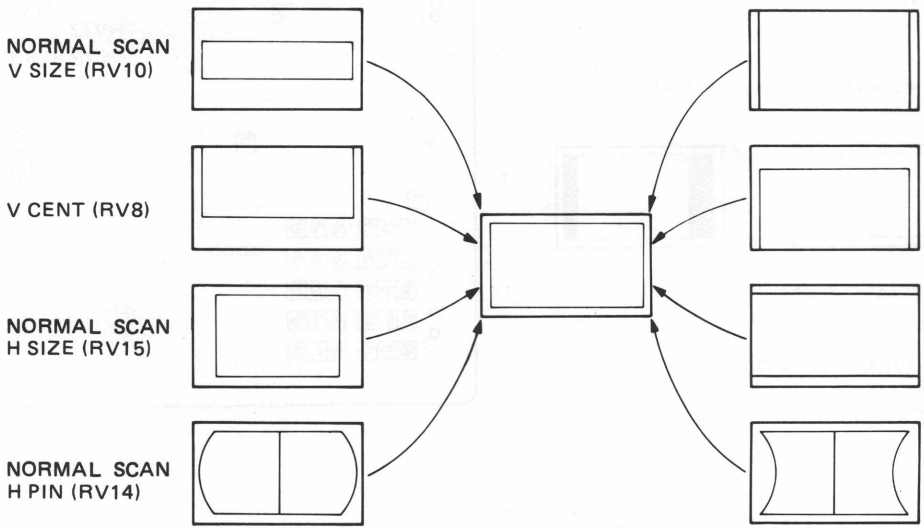

D BOARD VERTICAL LINEARITY ADJUSTMENT

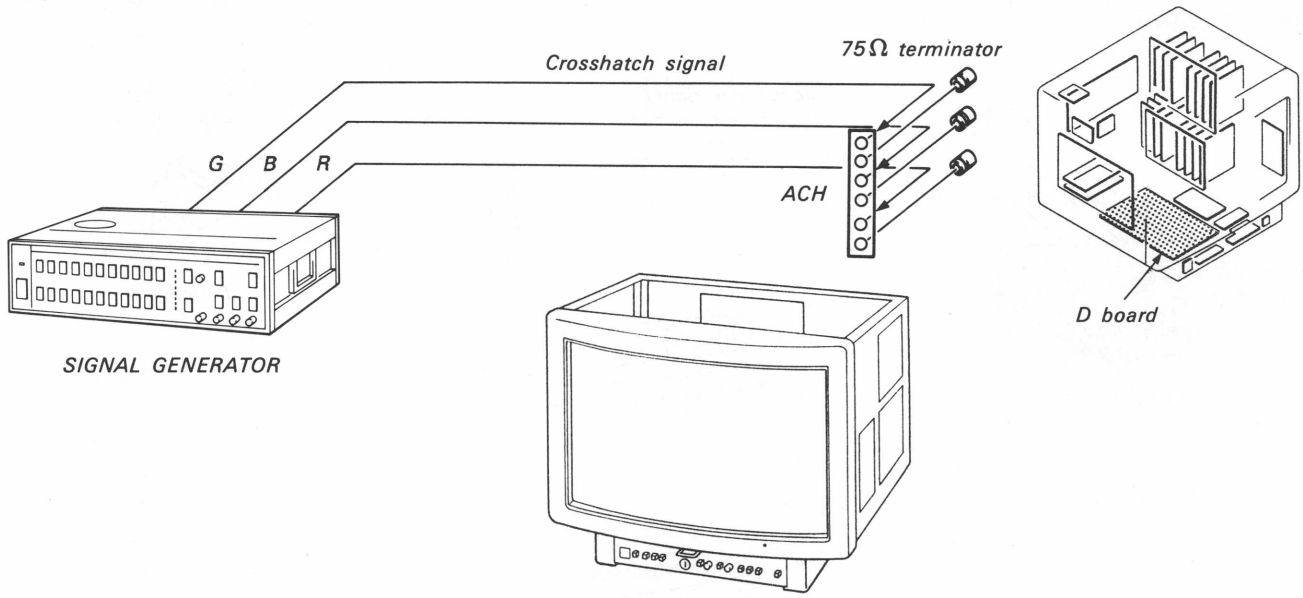

1. Input crosshatch signal (internal or external signal).
2. Turn V AMP (RV9) on the D board fully counterclockwise.
3. Make the upper and lower sections become in symmetry with V LIN PHASE (RV7) (A).
4. Match the linearity so that it becomes at regular intervals overall with V LIN AMP (RV9) (A) (B) (C).

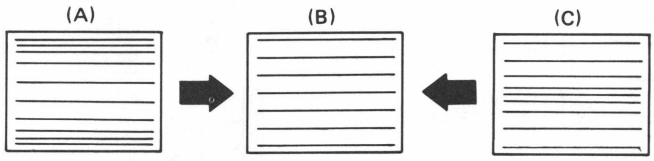

D board

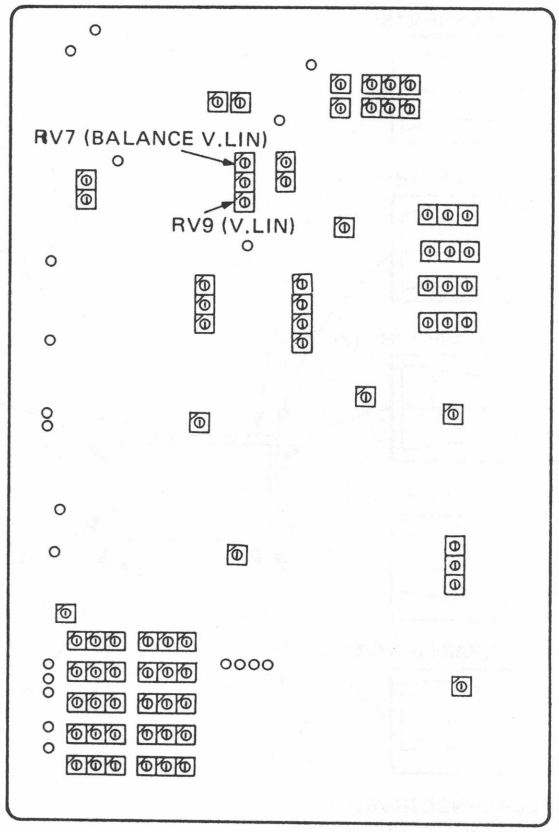

ADJUSTMENT OF TOP AND BOTTOM PINS ON THE D BOARD

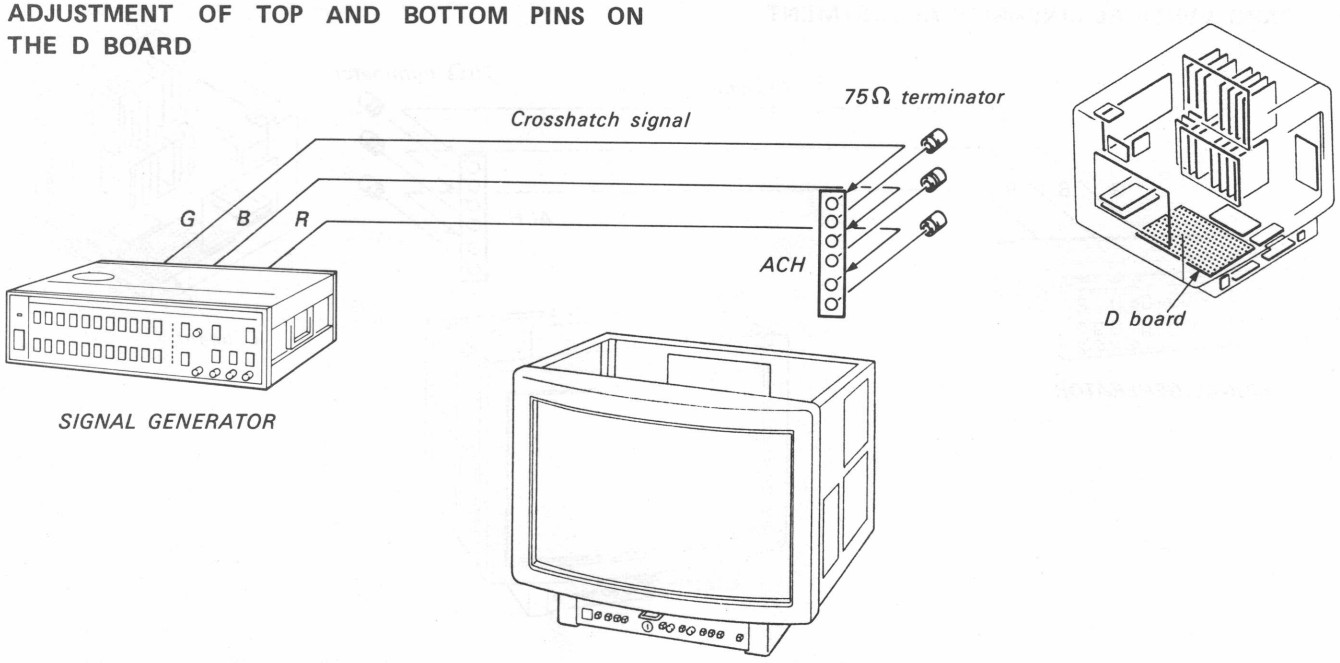

1. Input crosshatch signal (internal or external signal).
2. While engaging tracking of T & B PIN AMP (RV18), T & B PIN CENT (RV19), T & B PIN PHASE 1 (RV17), T & B PHASE 2 (RV55), T & B PIN PHASE 3 (RV56) and T & B PIN BALANCE (RV61) on the D board, match the TOP and BOTTOM pins.
3. Set to PROG and adjust the top and bottom pins with PR T&B PIN (RV74).

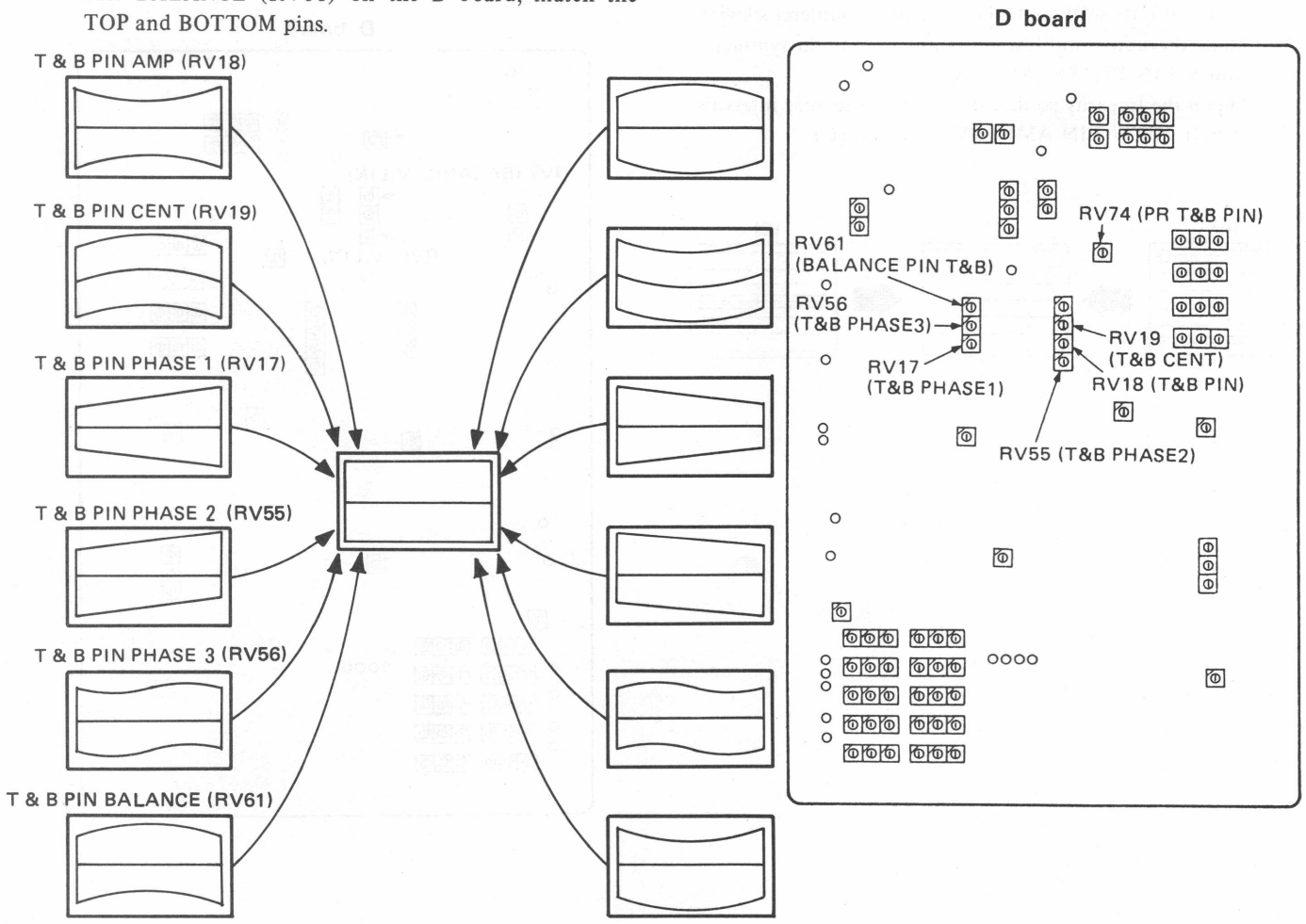

ADJUSTMENT OF DISTORTION OF Y AXIS CENTER AND HORIZONTAL PIN CUSHION ON THE D BOARD

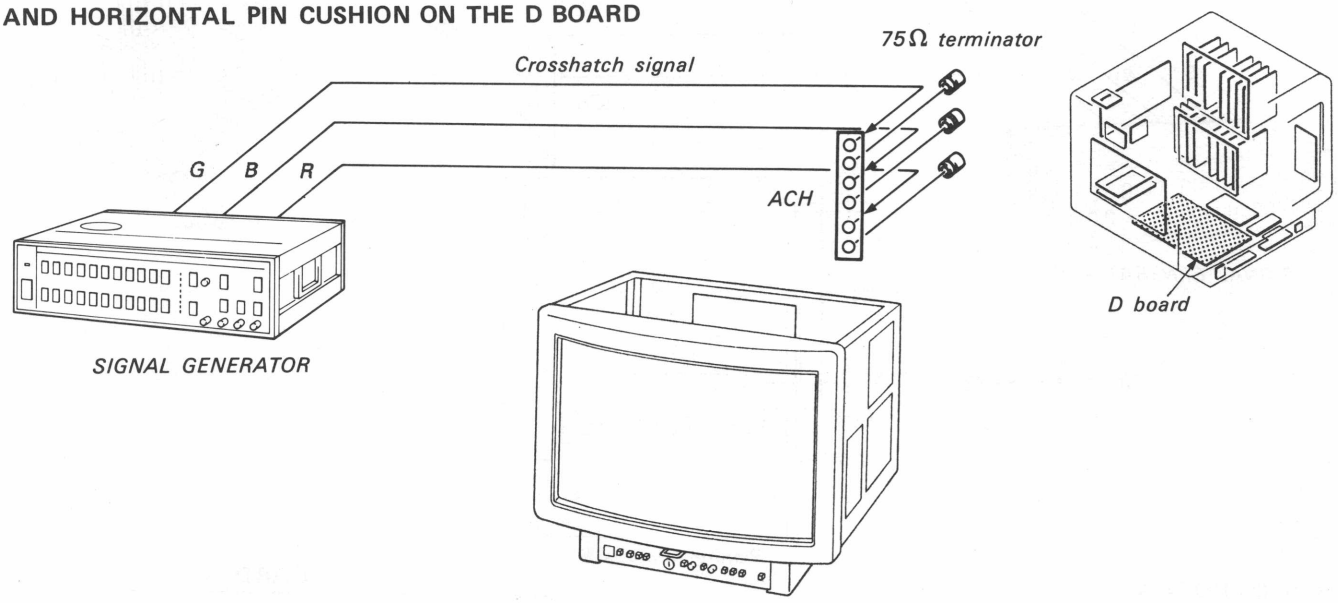

1. Input crosshatch signal (internal or external signal).
2. Adjust Y axis center with H BOW (RV60) and H SKEW (RV58) on the D board.

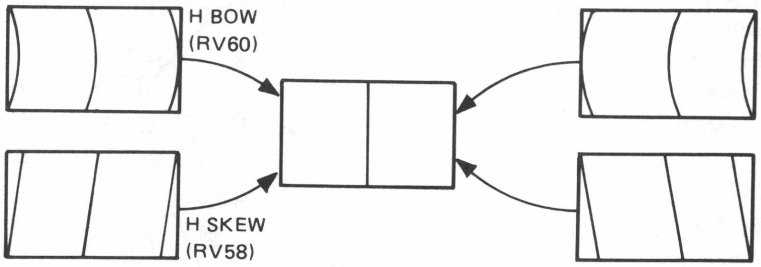

3. Adjust the distortion of the left and right pins with HDA H PIN (RV14), H PIN SIN (RV54) and H PIN PHASE (RV12).

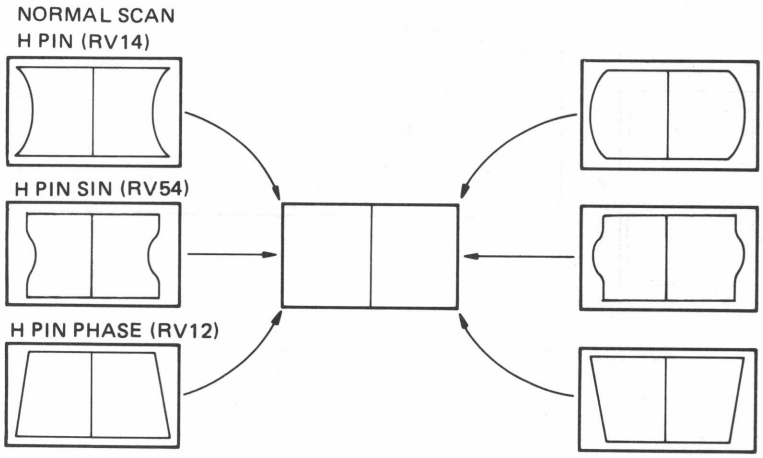

D board

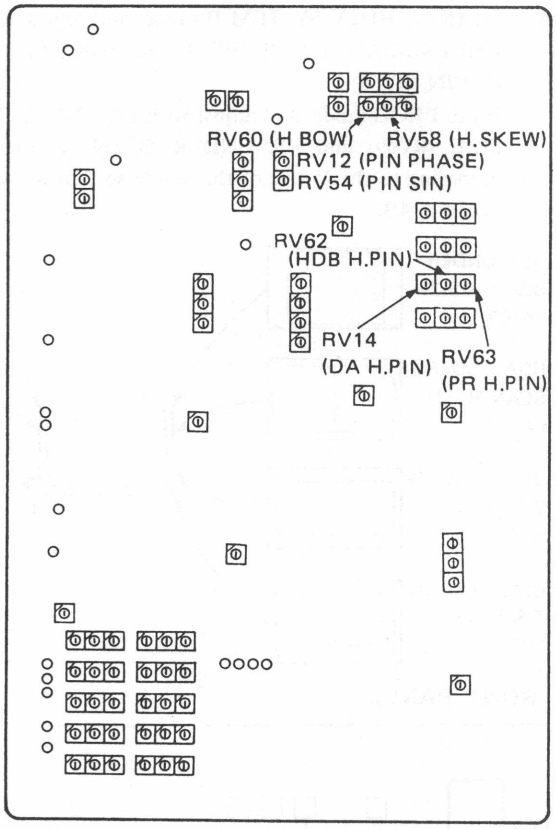

4. Set to HDTV B and adjust the left and right pins with HDB H PIN (RV62).
5. Set to PROG B and adjust the left and right pins with PR H PIN (RV63).

ADJUSTMENT DURING UNDERSCAN ON THE D BOARD

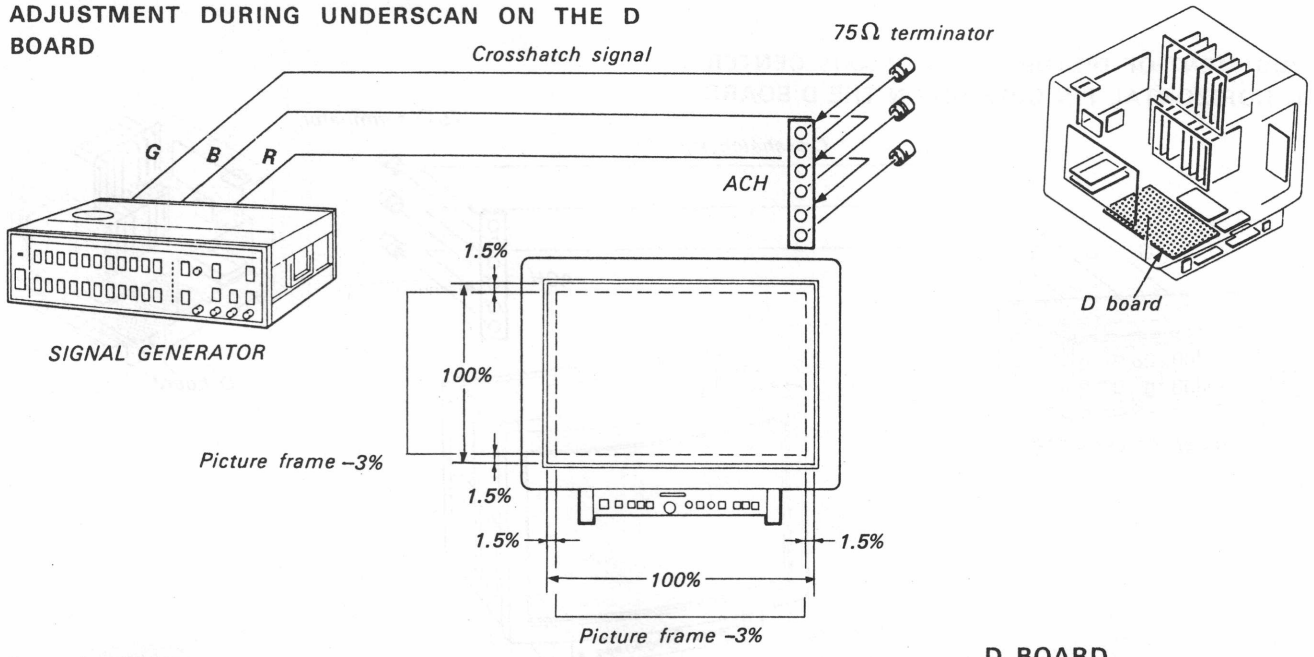

Set to the HDTV A.

1. Input crosshatch signal (internal or external signal)
2. Turn ON the UNDER SCAN SW of the SCAN MODE SW on the front panel.
3. While engaging tracking of HDA UNDER SCAN H. SIZE (RV67). HDA UNDER SCAN H. PIN (RV13), UNDER SCAN V. SIZE (RV11) and UNDER SCAN T & B PIN (RV59). adjust so that it becomes UNDER SCAN of — 3% of picture frame.
4. Set to the HDTV SYSTEM B mode, and adjust with HDB UNDER SCAN H. SIZE (RV68) and HDB UNDER SCAN H. PIN (RV64).
5. Set to PROG mode, and adjust with PR UNDER SCAN H. SIZE (RV69) and PR UNDER SCAN H. PIN (RV65) according to the V size of this mode so that a aspect ratio becomes 4:3.

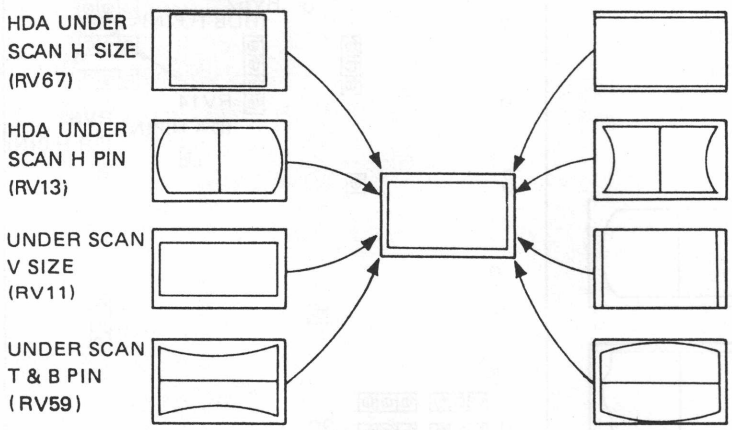

D BOARD

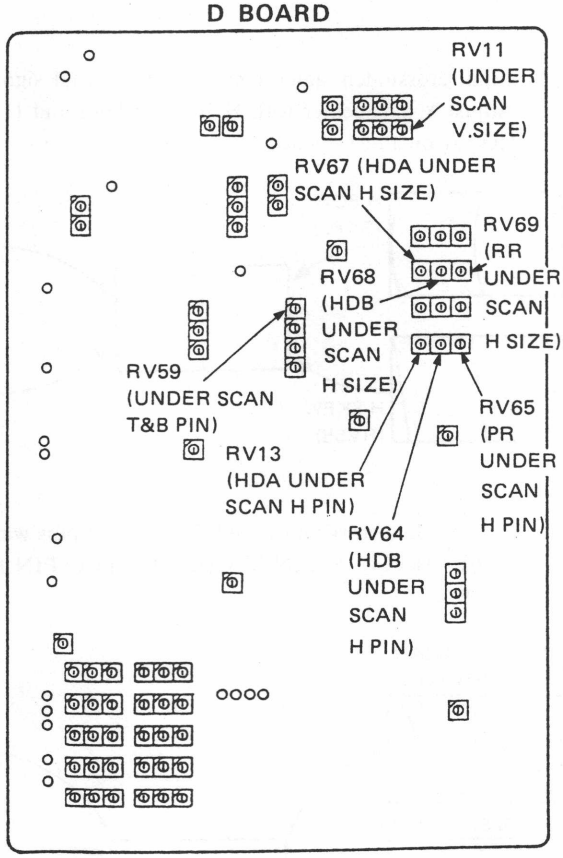

FRONT PANEL

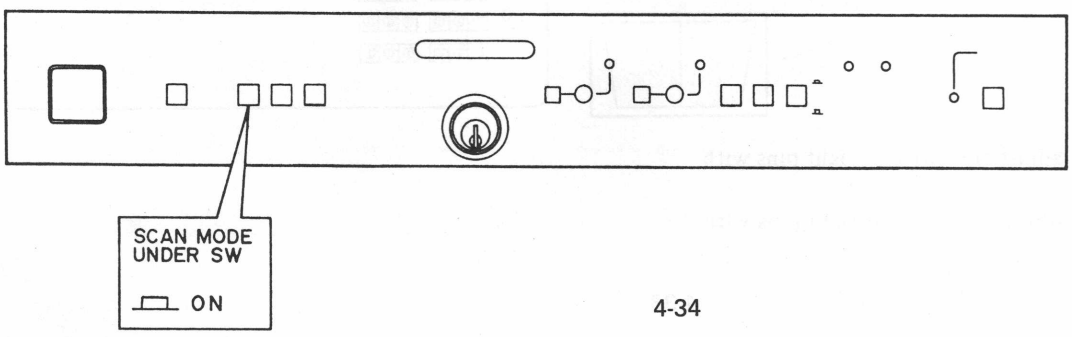

DA BOARD ADJUSTMENT

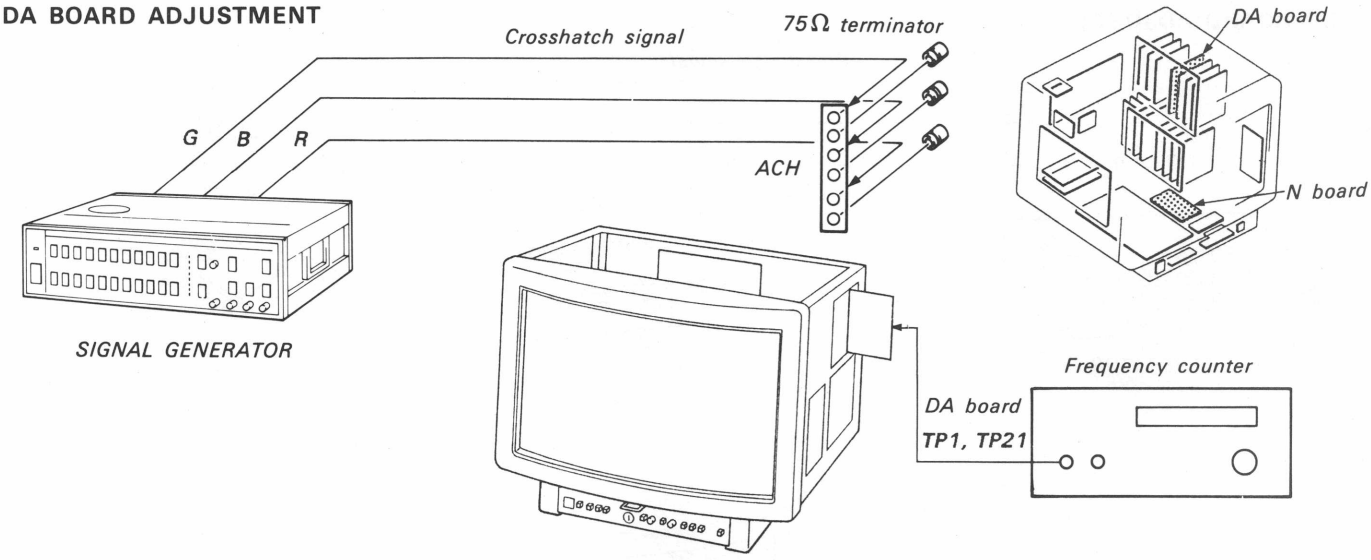

- Input crosshatch signal (internal or external signal).

RV1 adjustment

1. Connect with clip TP21 and GND on the DA board.
2. Connect frequency counter to TP1 (VD) on the DA board and adjust with RV1 so that it becomes 48 ± 1 Hz.

RV2 adjustment

1. Match the points shown in Fig. 1 of the horizontal direction convergence.
2. Shift the convergence as shown in Fig. 2 with the respective keys of MODE, FUNCTION, OPERATE, and CURSOR/DATA of the control unit of the sub control panel.
3. When the RV2 on the DA board is turned, the position of the convergence points alters as in Ⓐ and Ⓑ of Fig. 3. Turn RV2 so that these points coincide with the upper section of the screen.

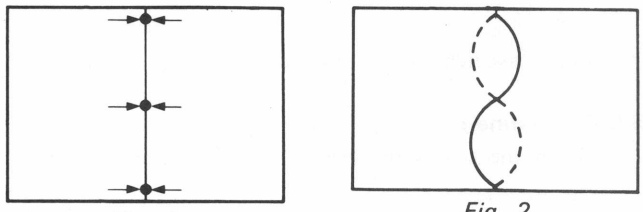

Fig. 1

Fig. 2

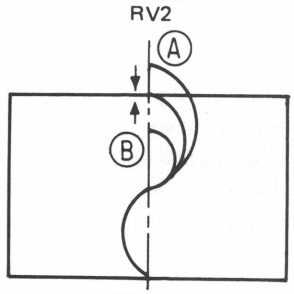

Fig. 3

DA board

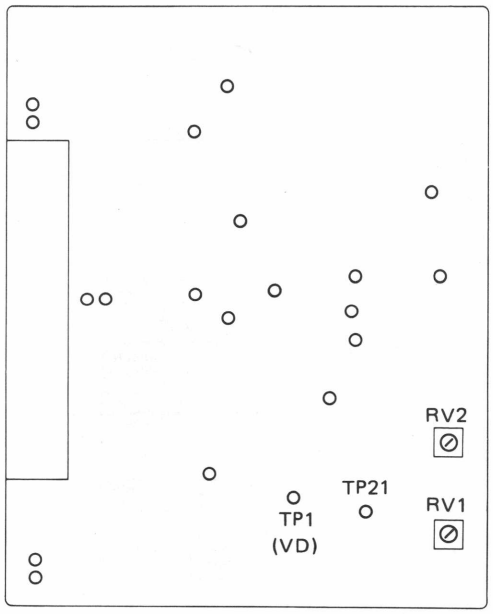

CONTROL UNIT (N board)

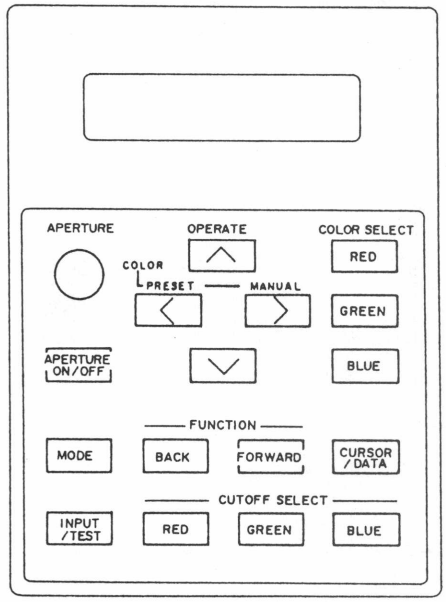

DB BOARD ADJUSTMENT

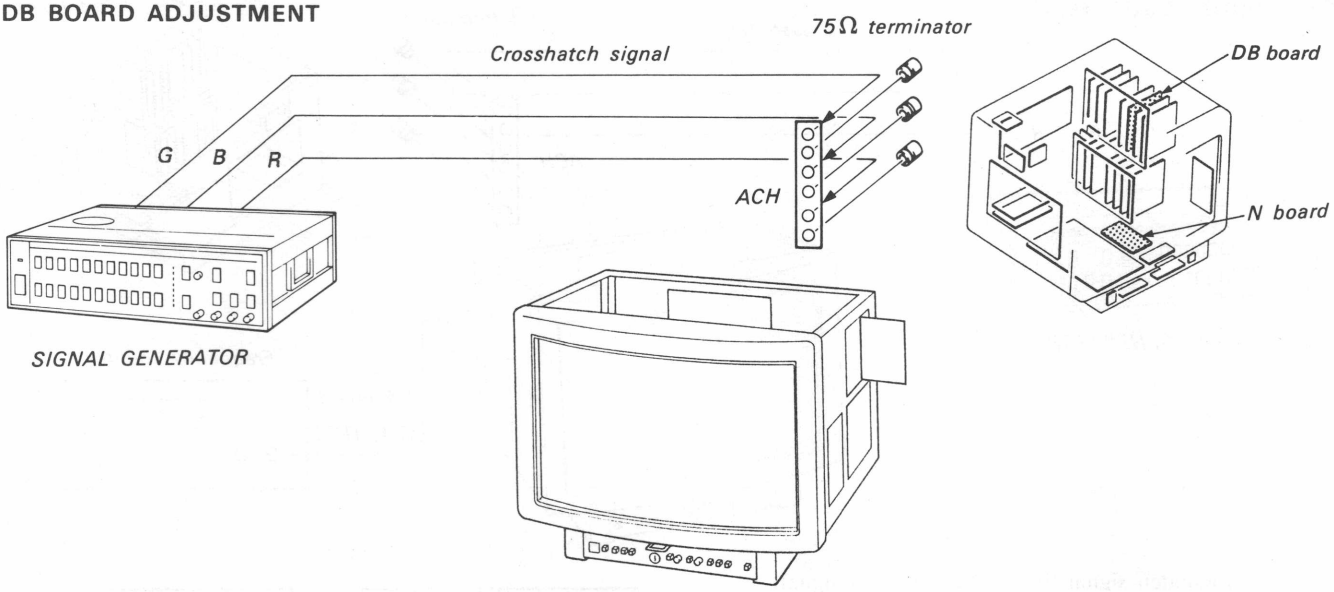

- Input crosshatch signal (internal or external signal).

SW4 adjustment

1. Match the points of vertical convergence as shown in Fig. 1.
2. Shift the convergence as shown in Fig. 2 with the respective keys of MODE, FUNCTION, OPERATE and CURSOR/DATA of the control unit of the sub control panel.
3. With the setting of the dip switch (SW4), the horizontal cycle phase alters as shown in Fig. 3.
   Setting can be made from 0 to 15 and as the phase alters as in Ⓑ of Fig. 3 when 0, Ⓐ of Fig. 3 when 15, match to center of screen by setting. The setting of SW4 is shipped in the state of Fig. 4.

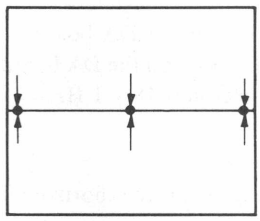

Fig. 1

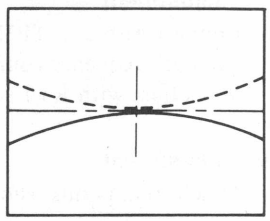

Fig. 2

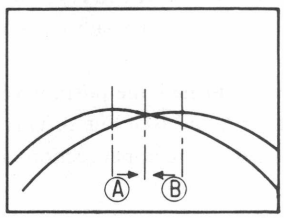

Fig. 3

1	ON
2	OFF
3	ON
4	ON

SW4

Fig. 4

DB board

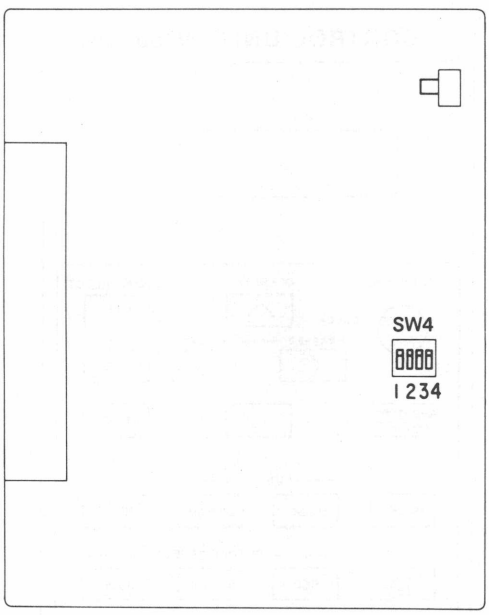

CONTROL UNIT (N board)

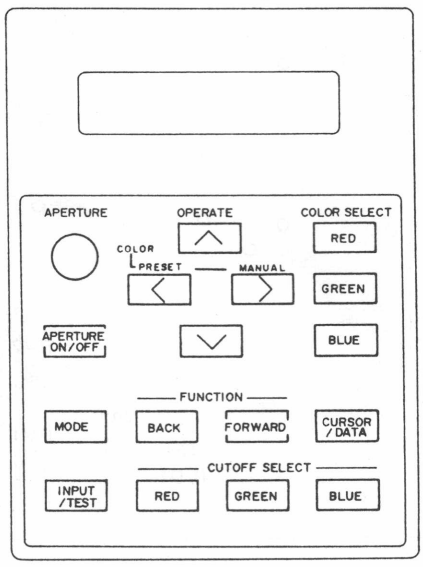

ADJUSTMENT OF R AND W BOARDS BEAM LANDING CORRECTION CIRCUITS

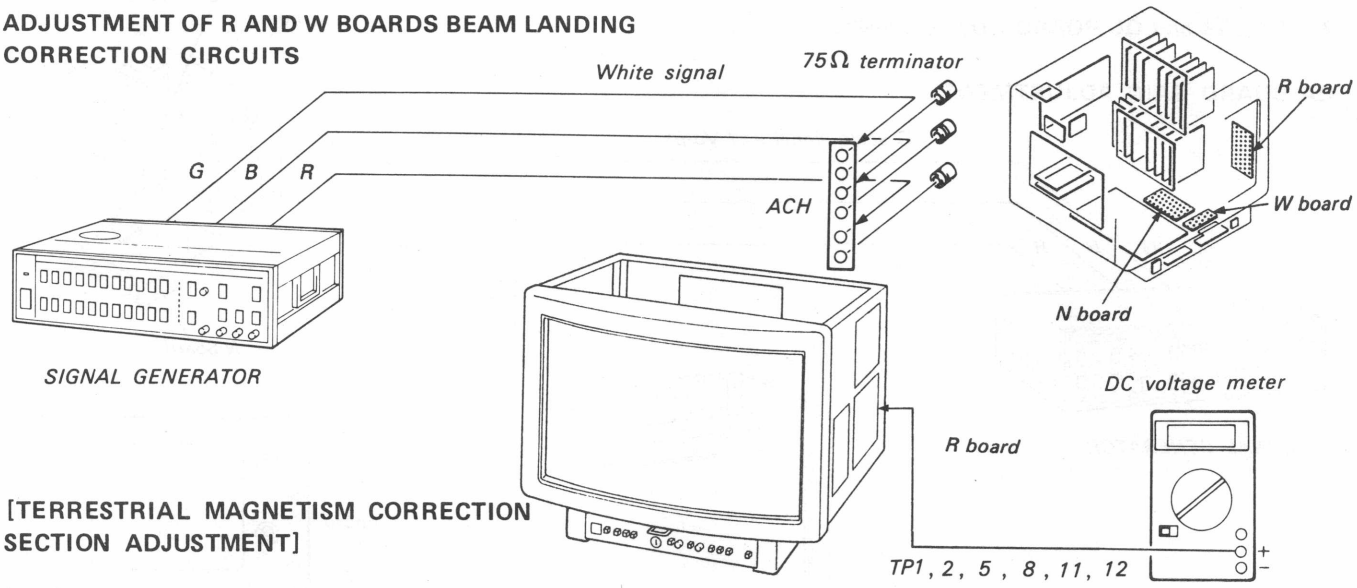

[TERRESTRIAL MAGNETISM CORRECTION SECTION ADJUSTMENT]

1. Set the LANDING ADJ DIRECTION SW (SW1) on the W board to SE (6).
2. Connect a DC voltmeter to TP1 of the R board and adjust the RV1 so that the output voltage becomes 2.00±0.01 Vdc.
3. Set the LANDING ADJ DIRECTION SW to S (8).
4. Connect a DC voltmeter to TP2 on the R board and adjust the RV2 so that the output voltage becomes 3.00±0.01 Vdc.

Note: This setting value is for 0.25 gauss of the horizontal section of the terrestrial magnetism. If the horizontal section value differs, make the adjustment in reference to section 4-5. SET-UP ADJUSTMENT.

[ADJUSTMENT OF THE BEAM CURRENT CORRECTION SECTION]

1. Cut off R. G. B together with the CUT OFF SELECT on the sub control panel of control unit (N board).
2. Connect a DC voltmeter to TP5 on the R board and adjust the RV3 so that the output becomes 60±20 mV.
3. Receive the white signal (internal or external signal).
4. Turn on the CONTRAST MANUAL SW on the front panel and adjust the CONTRAST control so that the TP5 output becomes 2.2 Vdc.
5. Connect TP5 and TP6, TP5 and TP7, with short clips, respectively.
6. Connect a DC voltmeter to TP8 and adjust the RV4 so that the output becomes 0±0.1 Vdc.
7. Connect TP5 and TP9, TP5 and TP10, with short clips, respectively.
8. Connect a DC voltmeter to TP11 and adjust the RV5 so that the output becomes 0±0.1 Vdc.

[OPERATION CONFIRMATION METHOD OF LANDING ADJUSTMENT (W BOARD)]

1. Receive the white signal (internal or external signal).
2. Select pure green color by the CUT OFF SELECT on the N board and match the LANDING ADJ DIRECTION SW (SW1) to E (4).
3. Set to ON both the LANDING ADJ ON/OFF SW (SW2) and LANDING FINE ADJ ON/OFF SW (SW3) on the W board.
4. Set the volumes RV7 to RV12 to the mechanical center.
5. Confirm that the left upper corner becomes redish when RV1 is turned counterclockwise and it becomes blueish when turned clockwise. Keep the poor purity as it is.
6. Confirm the same with RV2 to RV6 and keep them in poor purity.
7. Set the LANDING FINE ADJ ON/OFF SW (SW3) to OFF and confirm that the purity becomes good.
8. Set the LANDING FINE ADJ ON/OFF SW (SW2) to ON.
9. Set the LANDING FINE ADJ ON/OFF SW (SW2) to OFF and confirm that the purity becomes good.
10. Set the LANDING ADJ ON/OFF SW to ON.
11. Set the volumes RV1 to RV6 to the mechanical center.
12. Set the LANDING FINE ADJ ON/OFF SW (SW3) to OFF.
13. Turn the LANDING ADJ DIRECTION SW (SW1) by one step at a time and confirm that the screen color smoothly changes.

Note:

W board

RV1	RV3	RV5
RV2	RV4	RV6

- The screen corresponds to the adjustment volumes (RV1 to RV6).
- For the adjustment method of volumes RV7 to RV12, see section 4-5. SET-UP ADJUSTMENT.

2. QA, QB and QC BOARD ADJUSTMENT

QA BOARD GAIN ADJUSTMENT

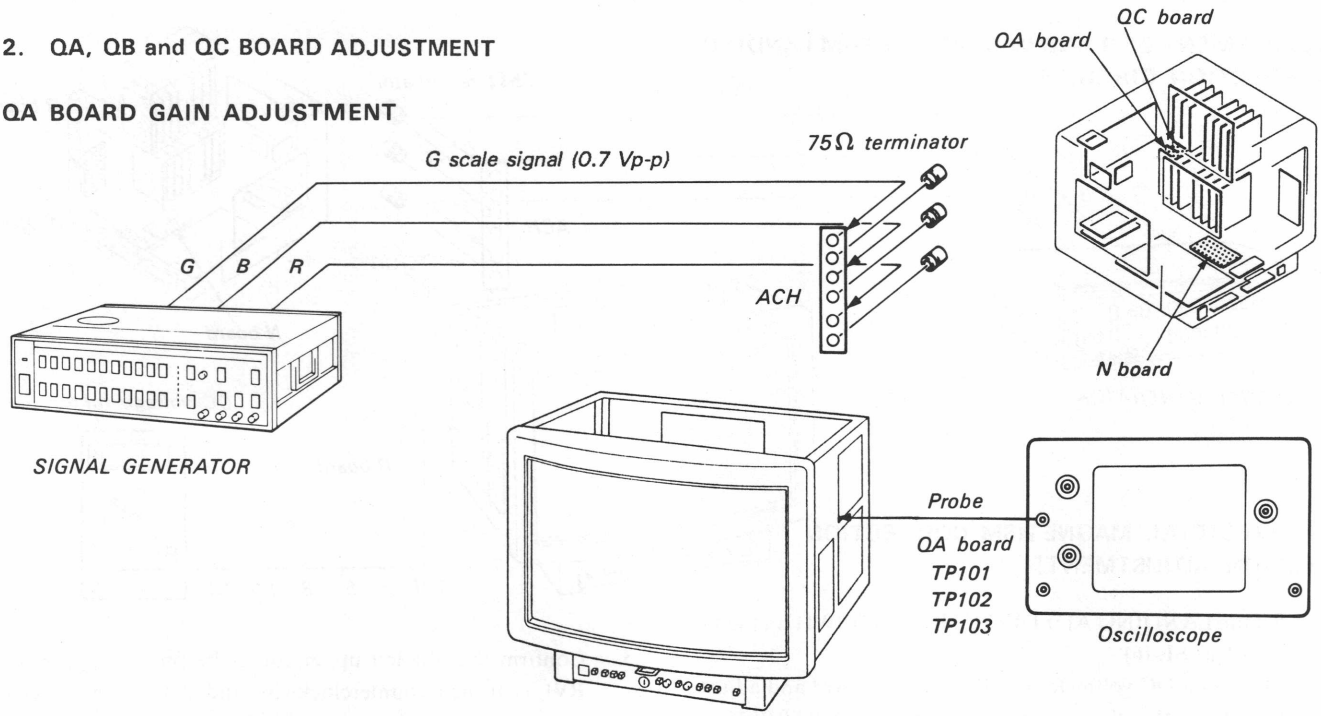

1. Remove the QC board.
2. Input the G SCALE signal.
3. Cut off all RED, GREEN and BLUE of the control unit (N board).
4. Adjust the video signal level (excluding the SYNC signal level) section of the TP101, TP102 and TP103 on the QA board to 0.7 ± 0.01 Vp-p using RV101, RV102 and RV103.

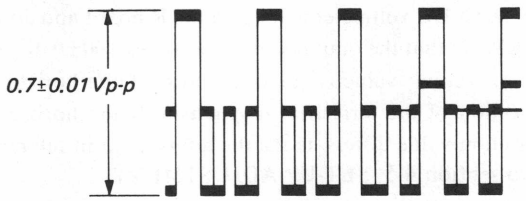

QA board

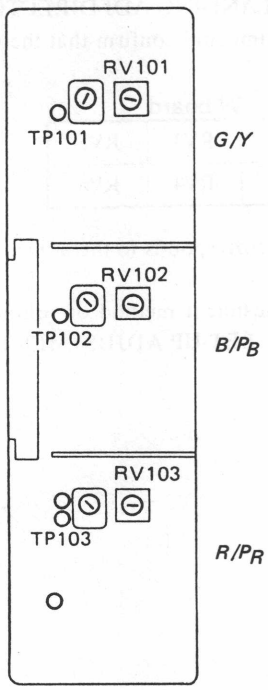

CONTROL UNIT (N board)

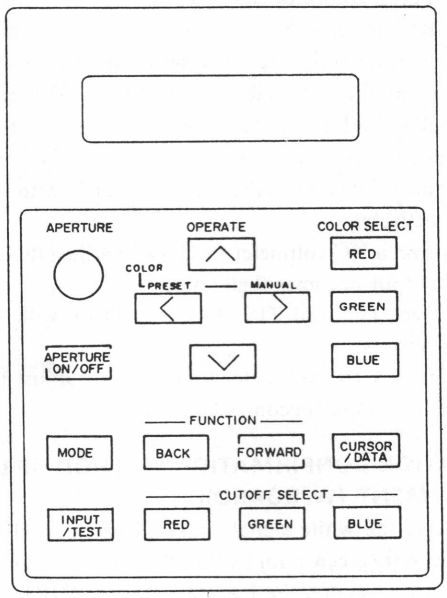

QA BOARD f CHARACTERISTICS ADJUSTMENT

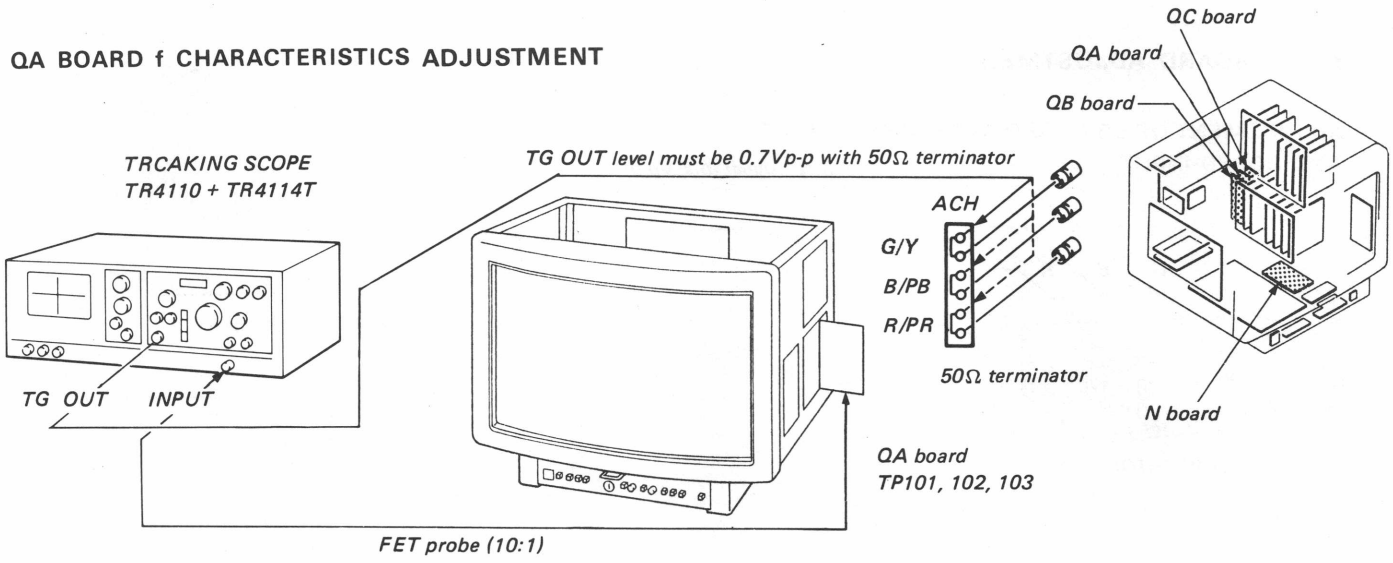

1. Cut off all RED, GREEN and BLUE of the control unit (N board).
2. Input the output signal of the tracking generator to the GREEN/Y terminal. Match the f characteristics of TP101 with CV101 to ±0.5 dB in the range of 60 to 30 MHz.
3. Input the output signal of tracking generator to the BLUE/P_B terminal. Match the f characteristics of TP102 with CV102 to ±0.5 dB in the range of 60 to 30 MHz.
4. Input the output signal of tracking generator to the RED/P_R terminal. Match the f characteristics of TP103 with CV103 to ±0.5 dB in the range of 60 to 30 MHz.

[QB BOARD GAIN ADJUSTMENT]

Input the signal to the QB board. Other measurements are the same with that on the QA board gain adjustment.

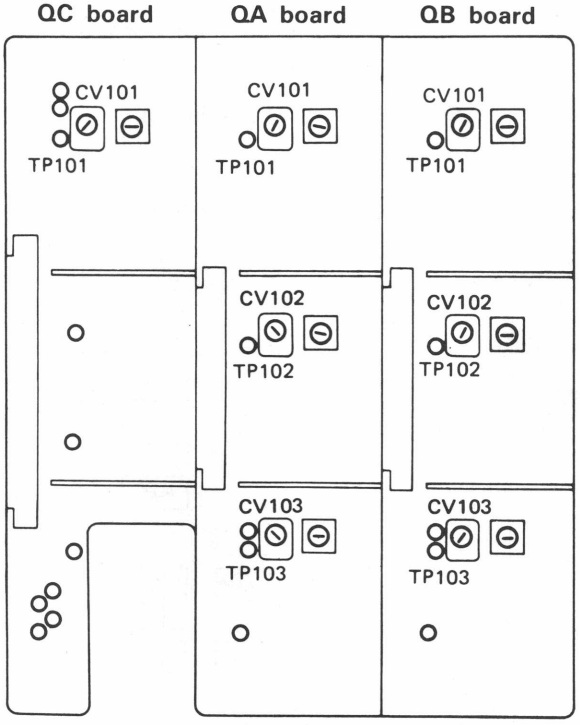

[QB BOARD f CHARACTERISTICS ADJUSTMENT]

Input the signal to the QB board.Other measurements are the same with that on the QA board f characteristics adjustment.

[QC BOARD GAIN ADJUSTMENT]

Input signal to EXT SYNC on QC board. TP is 101 and RV is 101 and other measurements are the same with that on the QA board gain adjustment.

[QC BOARD f CHARACTERISTICS ADJUSTMENT]

Input the signal to EXT SYNC on the QC board. TP is 101 and RV is 101, match to adjustment range of ± 1 dB. Other measurements are the same with that on the QA board f characteristics adjustment.

CONTROL UNIT (N board)

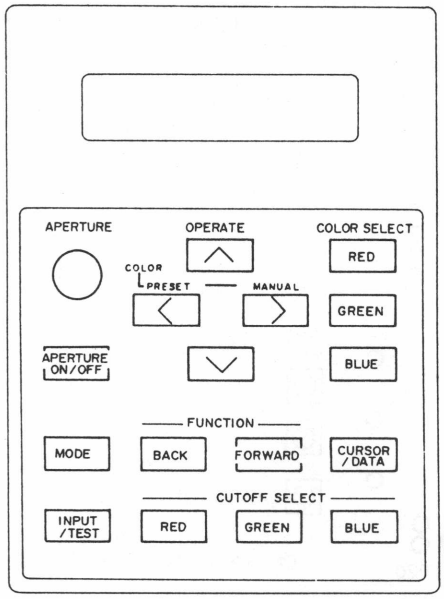

3. BB BOARD ADJUSTMENT

ADJUSTMENT OF BB BOARD APERTURE CIRCUIT AND ADDED INPUT LEVEL

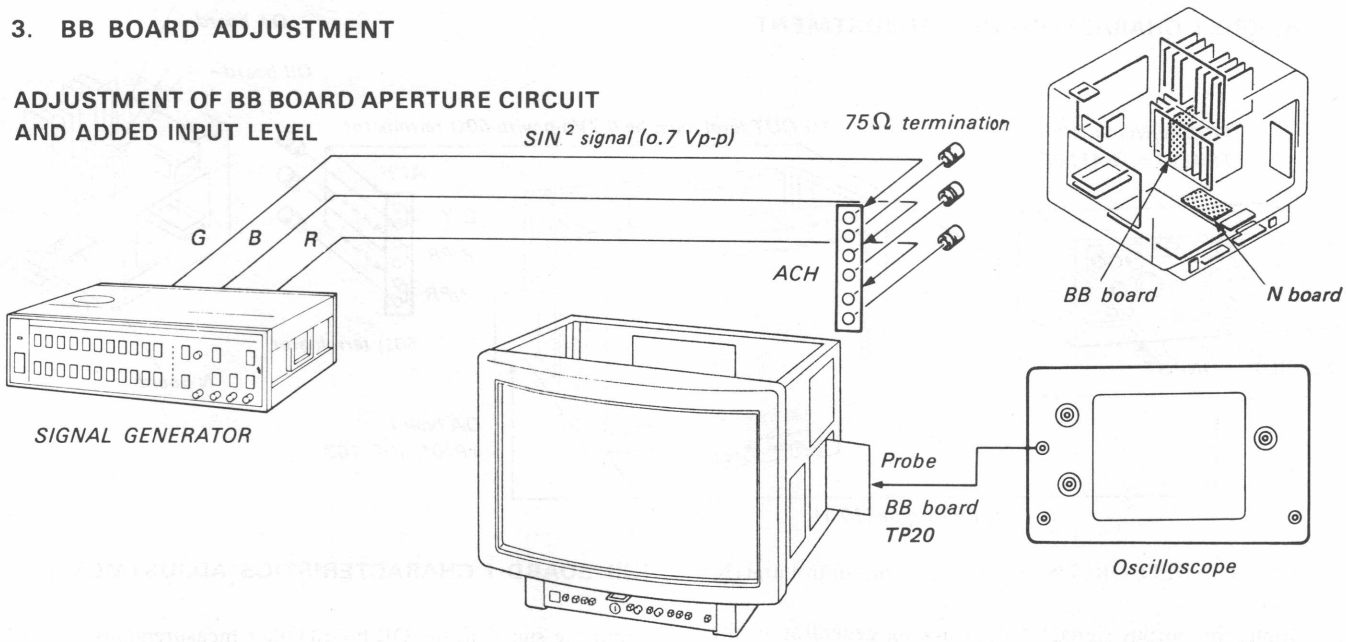

1. Input the SIN ^{2} signal.
2. Set the APERTURE SW on the control unit (N board) to ON.
3. Set the APERTURE VR to maximum.
4. Cut off all RED, GREEN and BLUE on the control unit (N board).
5. Connect YH (TP20) of the BB board to an oscilloscope.
6. Adjust with RV4 and RV5 of the BB board to make the level below 20mV as shown in Fig.

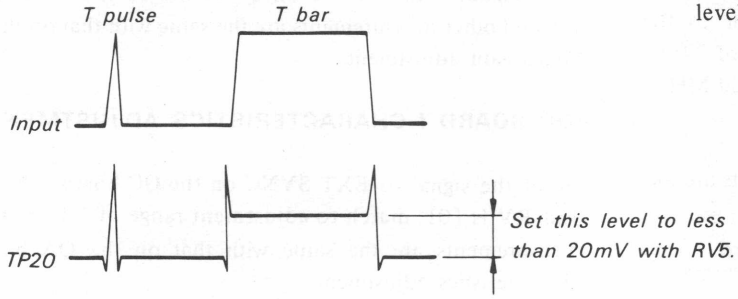

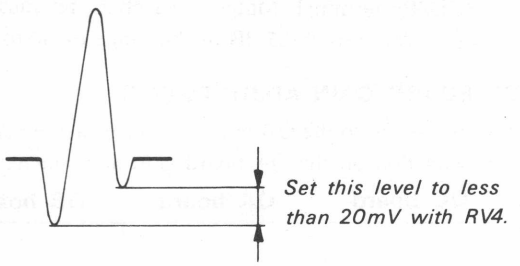

BB board

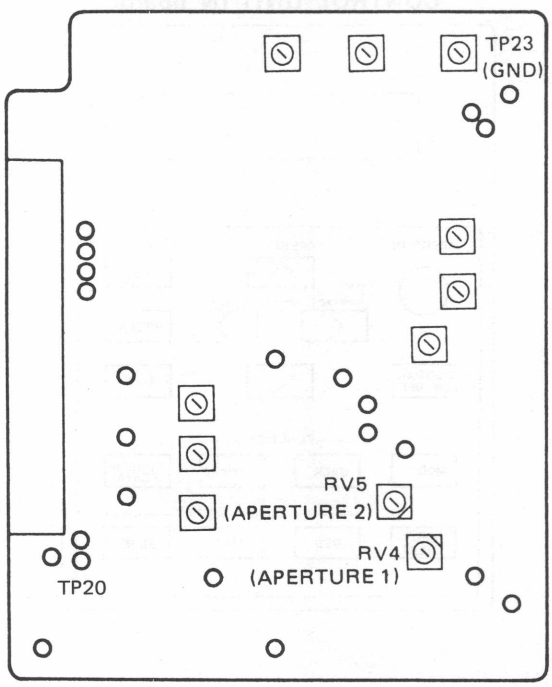

CONTROL UNIT (N board)

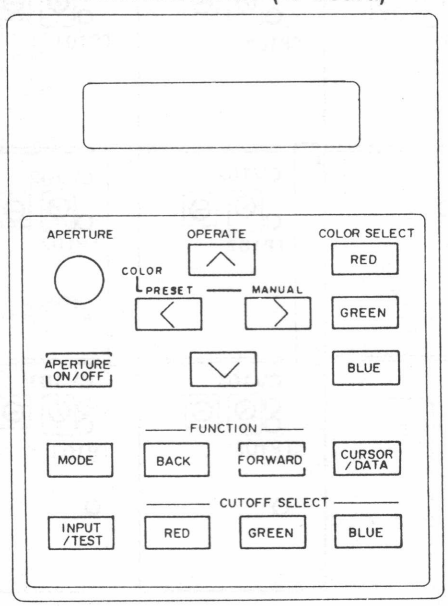

LEVEL ADJUSTMENT OF BB BOARD YPB PR MATRIX CIRCUIT

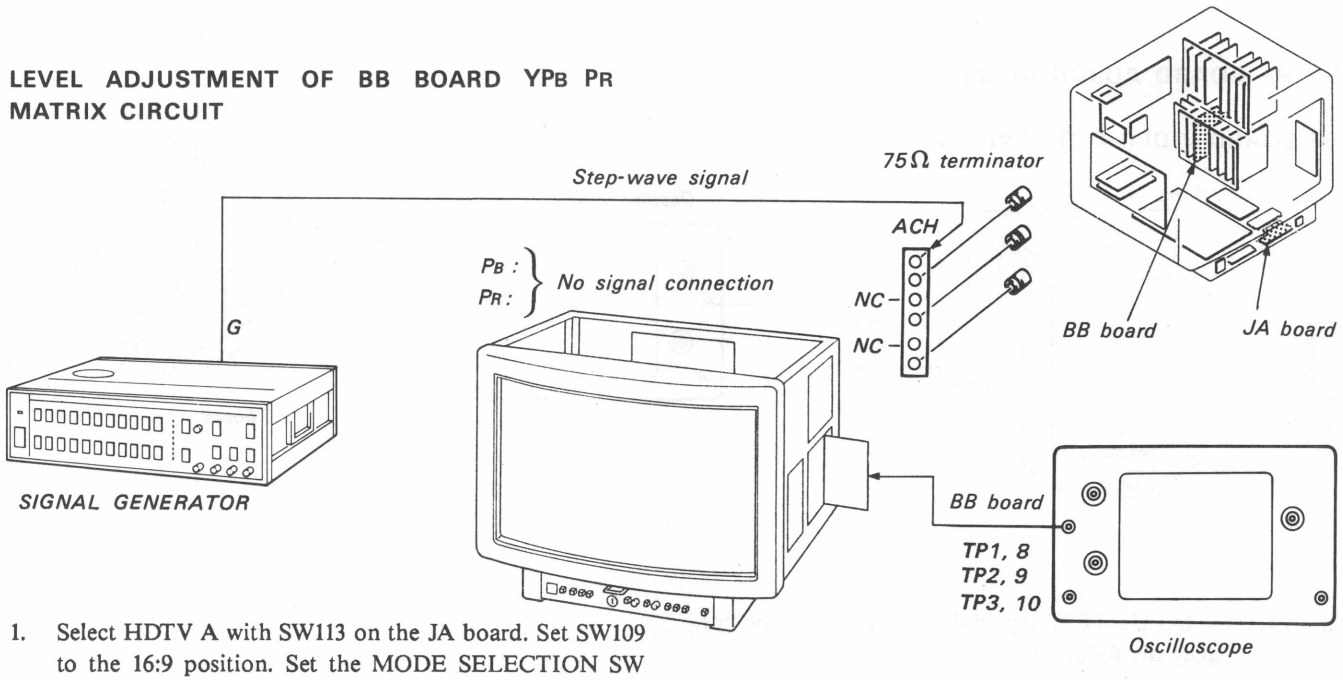

1. Select HDTV A with SW113 on the JA board. Set SW109 to the 16:9 position. Set the MODE SELECTION SW (COLOR/B&W) on the front panel to the COLOR position.

[LEVEL ADJUSTMENT OF RGB AND Y]

2. Remove J1 and J2 from the BB board.
3. Set SW102 on the JA board to the GBR position and measure the AMPLITUDE VR1 of R OUT (TP8) in the RGB mode.
4. Set SW102 on the JA board to the Y PB PR position and adjust RV1 so that amplitude of R OUT (TP8) in Y PB PR mode becomes VR1 ± 10 mVp-p.
5. Adjust G OUT and B OUT in the same manner as R OUT.
   G OUT TP9, RV2
   B OUT TP10, RV3
6. Change over SW102 on the JA board and confirm that the screen colors do not change in RGB mode and Y PB PR mode. If colors change, repeat all steps starting from step 3.
7. Insert back J1 and J2.

BB board

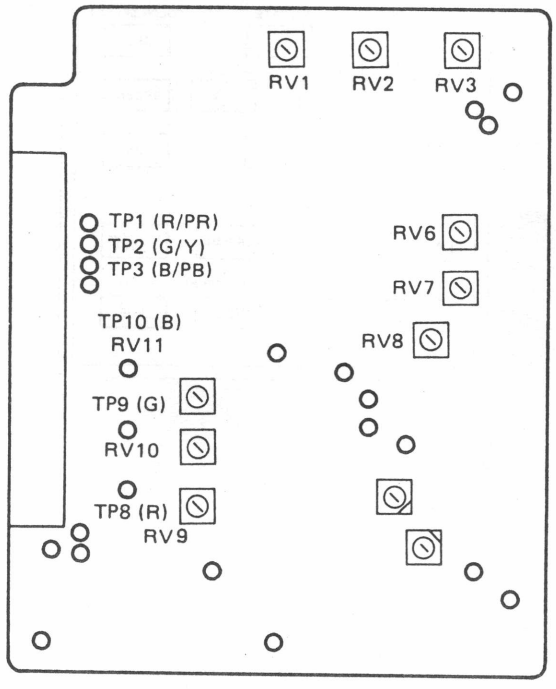

[LEVEL ADJUSTMENT OF RGB AND B&W]

8. Set SW102 on the JA board to the RGB position.
9. Set the MODE SELECTION SW (COLOR/B&W) on the front panel to the B&W position and measure amplitude VR2 of R OUT (TP8) in B&W mode.
10. Set MODE SELECTION SW (COLOR/B&W) on the front panel to COLOR position and adjust RV6 so that amplitude of R OUT (TP8) in the COLOR mode becomes VR2 ± 10 Vp-p.
11. Adjust G OUT and B OUT in the same manner as R OUT.
    G OUT TP9, RV7
    B OUT TP10, RV8
12. Change over the MODE SELECTION SW (COLOR/B&W) on the front panel and confirm that the colors on the screen are the same in both RGB mode and B&W mode.
    If they have changed, repeat all steps starting from step 8.

[LEVEL ADJUSTMENT OF RGB]

13. Set SW102 on the JA board to RGB, and the MODE SELECTION SW (COLOR/B&W) on the front panel to COLOR.
14. Measure amplitude VR3 of R IN (TP1).
15. Adjust RV9 so that amplitude of R OUT (TP8) becomes VR3 ± 10 mVp-p.
16. Adjust G OUT and B OUT in the same manner.
    G ..... TP2 (G IN), TP9 (G OUT), RV10
    B ..... TP3 (B IN), TP10 (B OUT), RV11

JA board

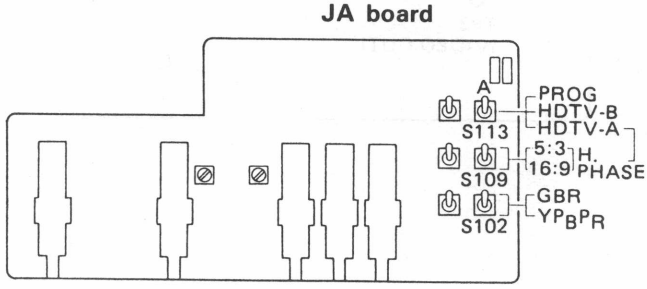

5. BE BOARD ADJUSTMENT

BE BOARD VIDEO OUT LEVEL ADJUSTMENT

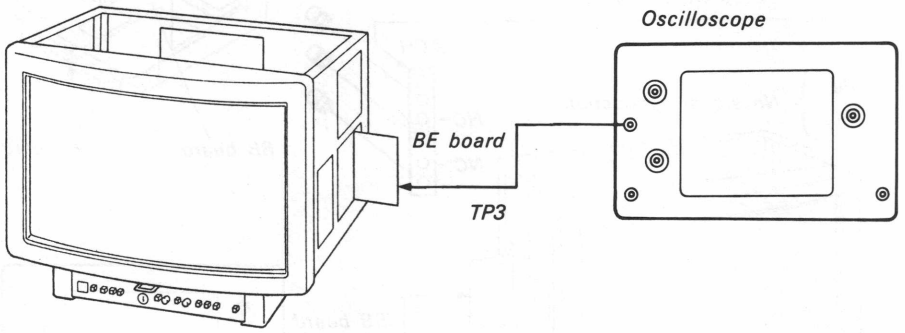

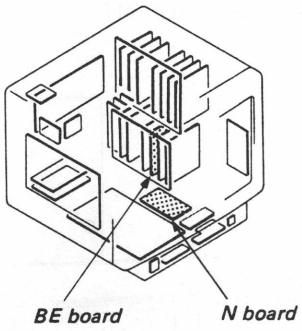

1. Press the INPUT/TEST key on the control unit (N board) and display the following.

```
FLAT FIELD:HD-A
COLOR-PRESET RGB
```

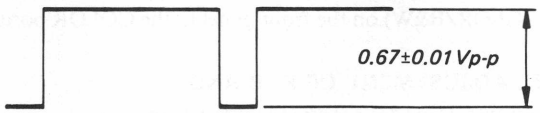

2. Connect an oscilloscope to TP3 (VIDEO OUT) of the BE board and adjust RV1 (TEST VIDEO GAIN) so that the level becomes 0.67±0.01 Vp-p.

BE board

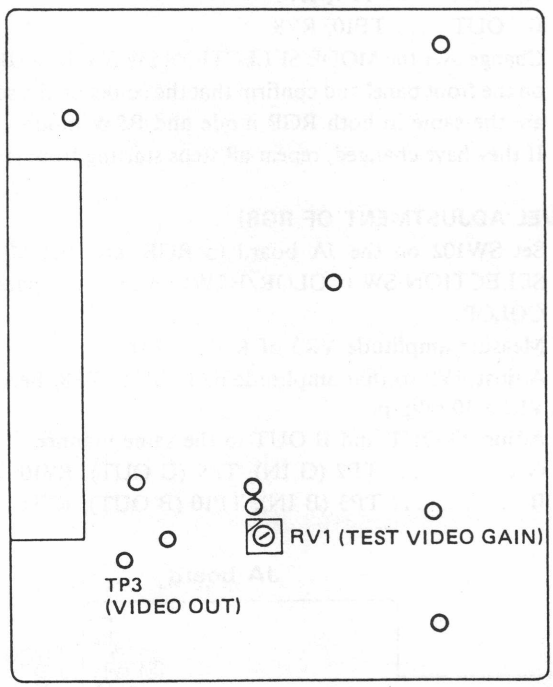

CONTROL UNIT (N board)

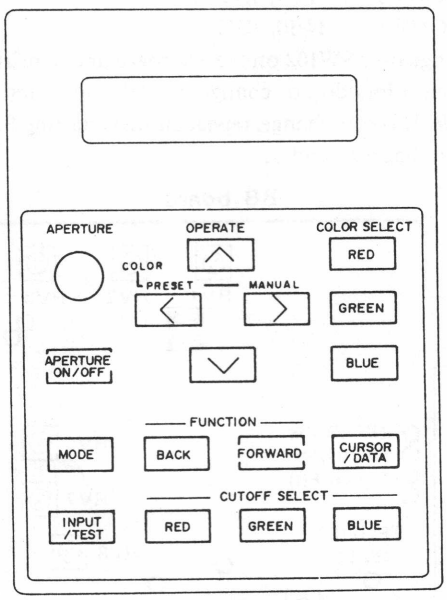

6. BF BOARD ADJUSTMENT

BF BOARD H DELAY AMOUNT AND V DELAY AMOUNT ADJUSTMENT

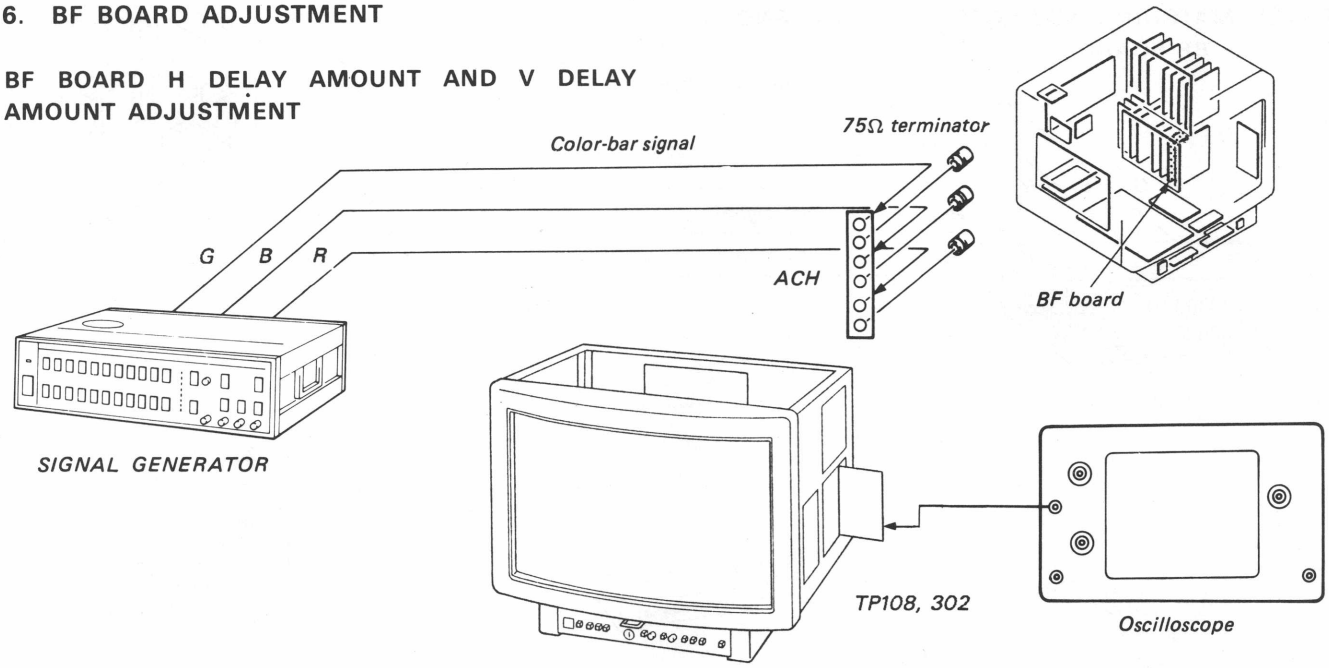

1. Input the color bar signal.
2. Monitoring TP108 on the BF board with an oscilloscope, turn ON the H DELAY SW and adjust the H DELAY (RV102) on the BF board so that the pulse width becomes 10 ± 0.5 μsec.
3. Monitoring TP302 on the BF board with an oscilloscope, turn ON the V DELAY SW and adjust the V DELAY (RV301) on the BF board so that the pulse width becomes 8.4 ± 0.2 msec.

H Delay Amount Adjustment

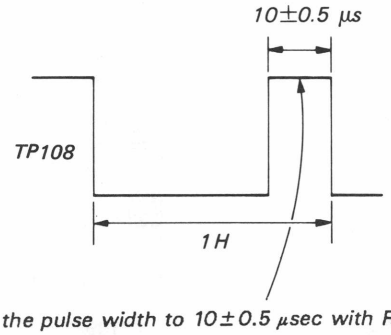

Adjust the pulse width to 10 ± 0.5 μsec with RV102.

V Delay Amount Adjustment

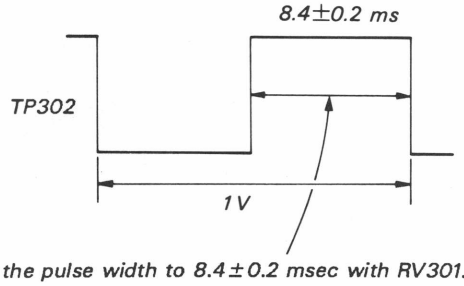

Adjust the pulse width to 8.4 ± 0.2 msec with RV301.

BF board

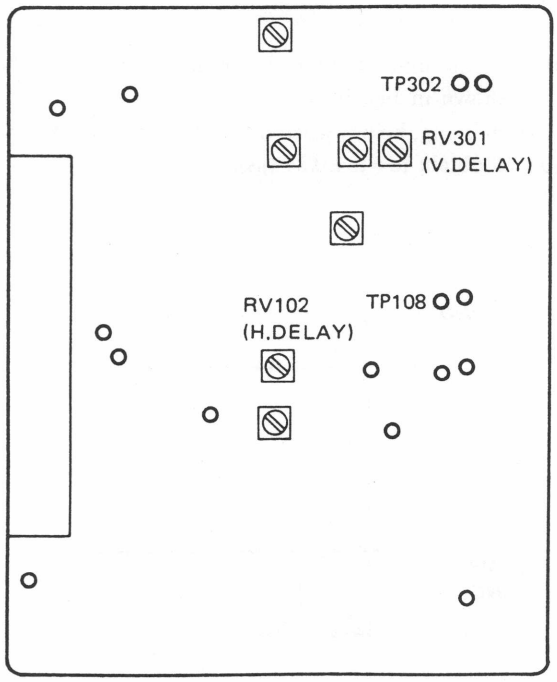

PHASE MATCHING ADJUSTMENT OF HD AND H SYNC OF BF BOARD

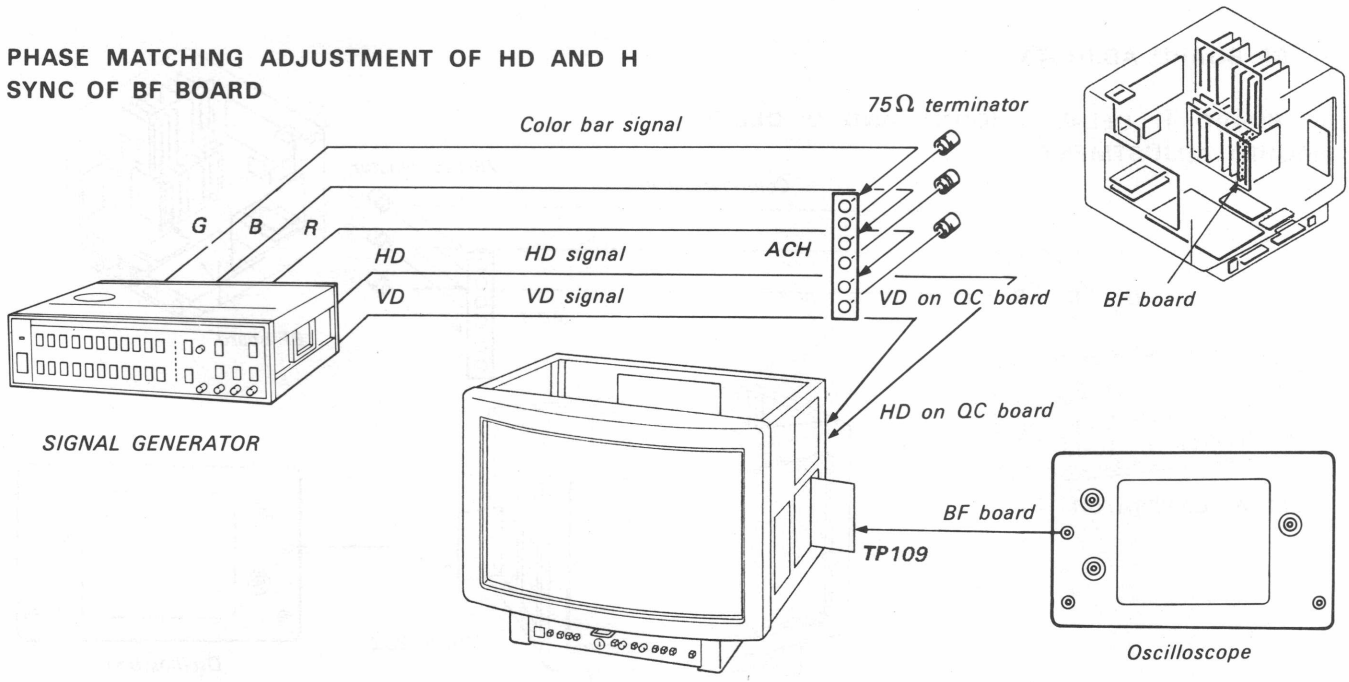

1. Input the color bar signal.
2. Monitoring the pin ⑭ connector BF-1 and TP109 on the BF board with oscilloscope, adjust RV101 so that td shown in Fig. blow becomes 0.82 μs. td should be measured the point where amplitude is 50%.

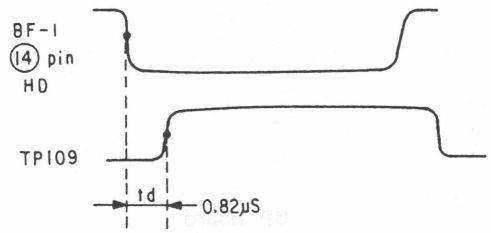

Note: At the time of shipment, input HD and H SYNC as shown in Fig. below and the phase is adjusted.

As shown in Fig. below, when different HD signal is input, re-adjust to obtain td = t1 + 0.23 (μs).

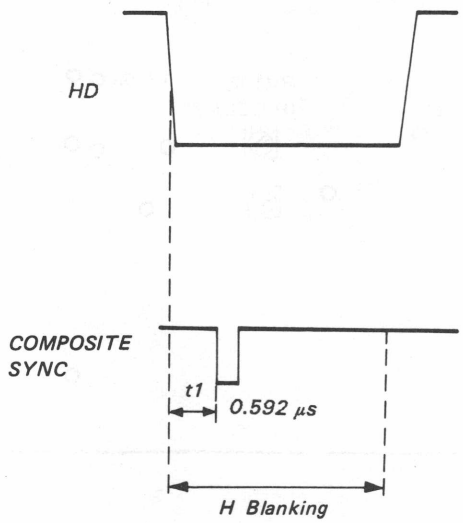

BF board

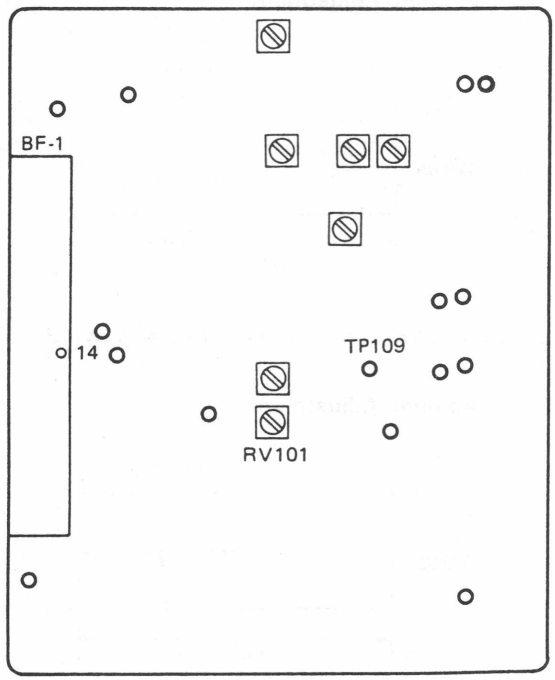

[ADJUSTMENT 1 OF CLAMP PULSE PHASE AND PULSE WIDTH]

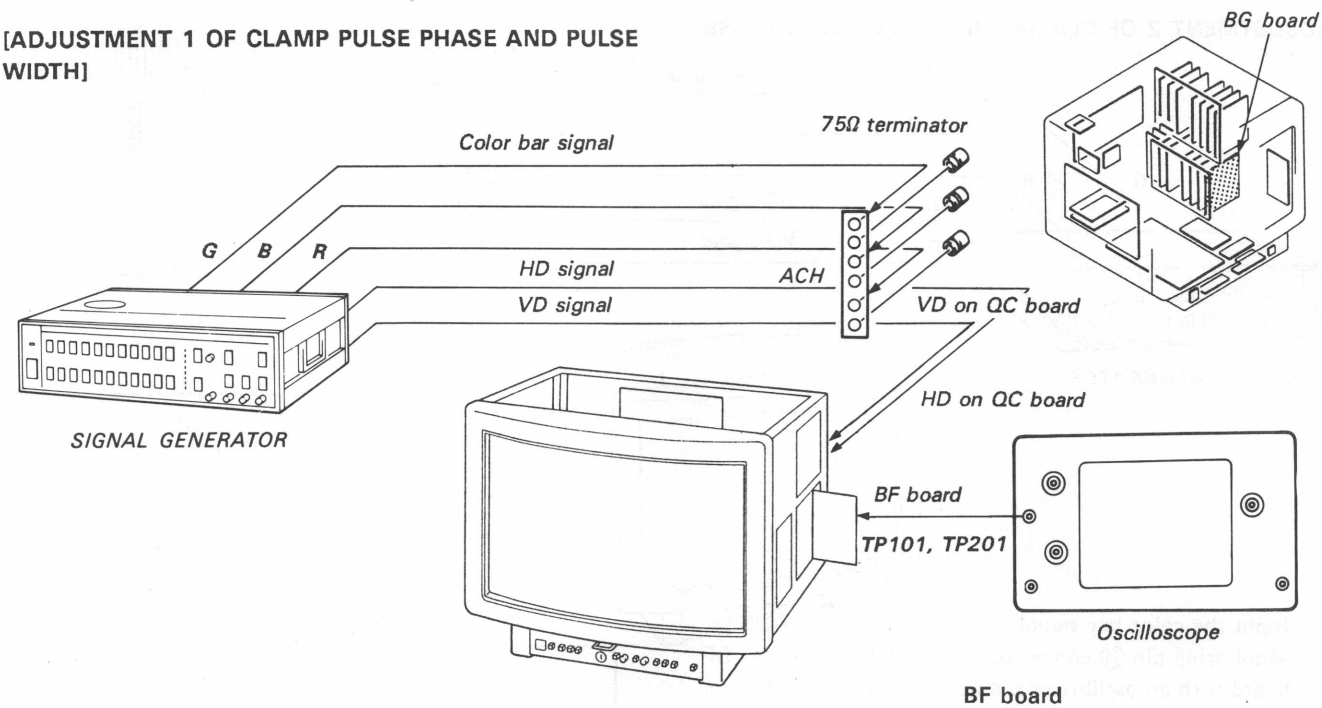

1. Input the color bar signal.
2. Monitoring TP101 and TP201 on the BF board with an oscilloscope, adjust td_1 and tw_1 in Fig. below with RV203 and RV204. td_1 and tw_1 respectively should be the points where amplitude is 50%.

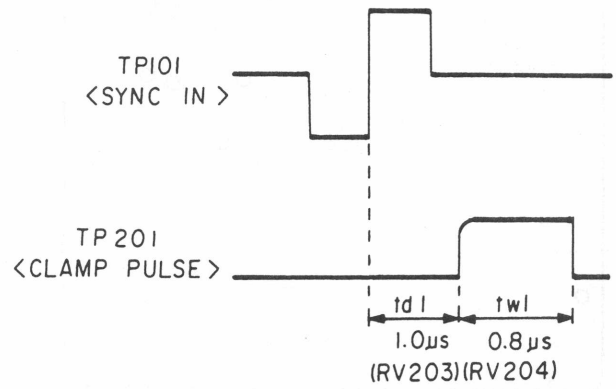

BF board

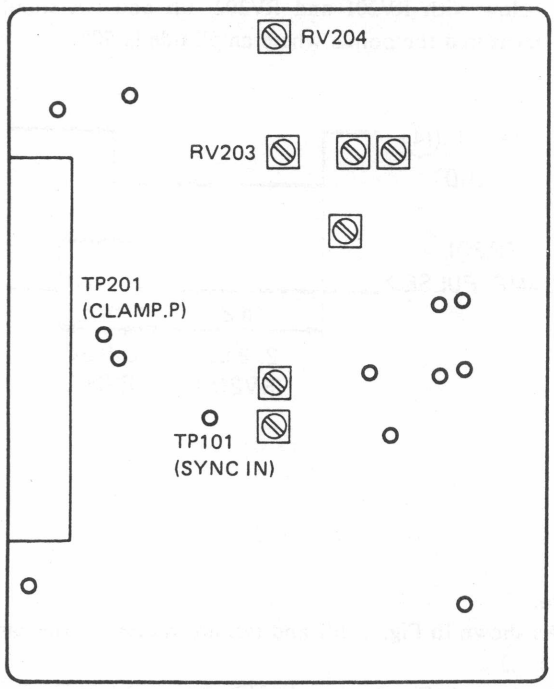

Note:

td_1 and tw_1 shown above are the values when the BTA/SMPTE standard for HDTVs and the former HDTV standard (Sony standard or Tsukuba Exposition standard) are input.

When a signal with a back porch of 1.8 μs or less is input, re-adjust to obtain the following.

$td_1 + tw_1 <$ BACk-porch period

$tw_1 \geqq 0.8$ μs.

[ADJUSTMENT 2 OF CLAMP PULSE PHASE AND PULSE WIDTH]

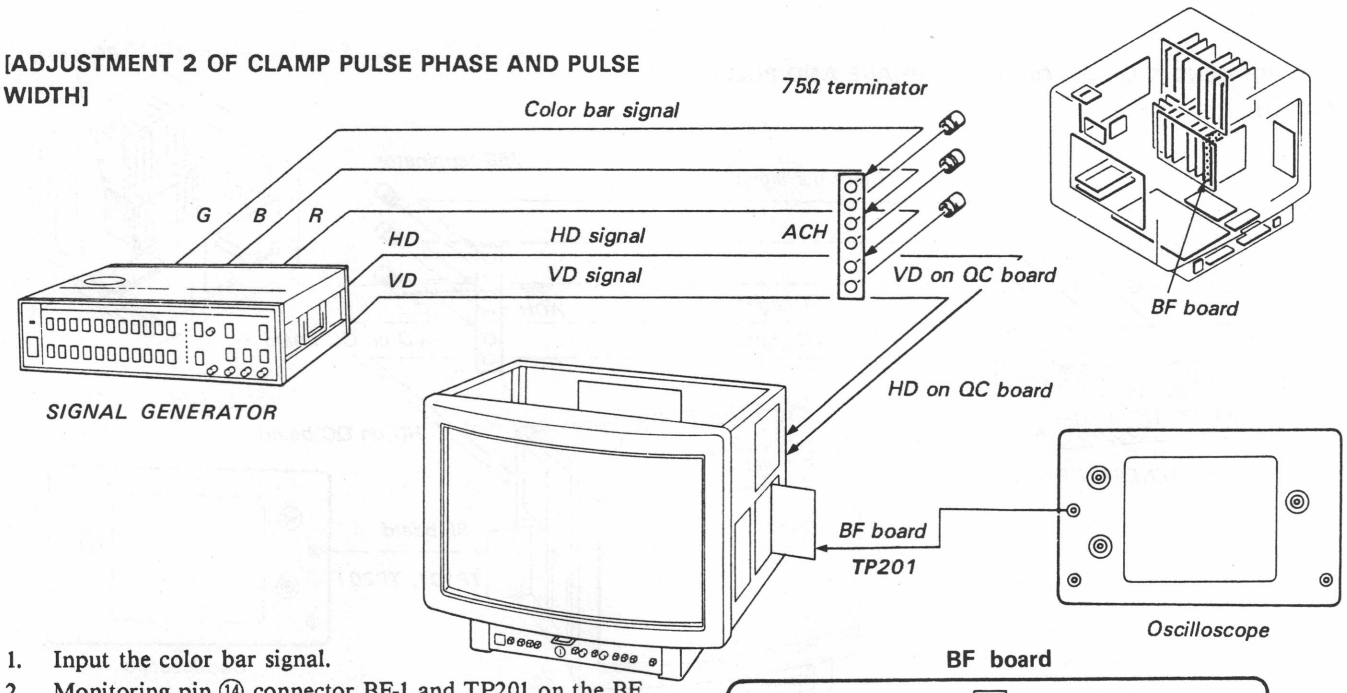

1. Input the color bar signal.
2. Monitoring pin ⑭ connector BF-1 and TP201 on the BF board with an oscilloscope, adjust td_2 and tw_2 in the Fig. below with RV201 and RV202. td_2 and tw_2 should be measured the points where amplitude is 50%.

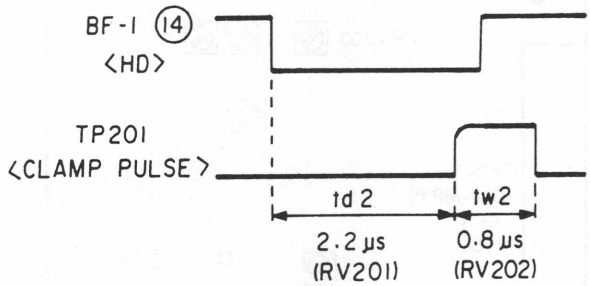

BF board

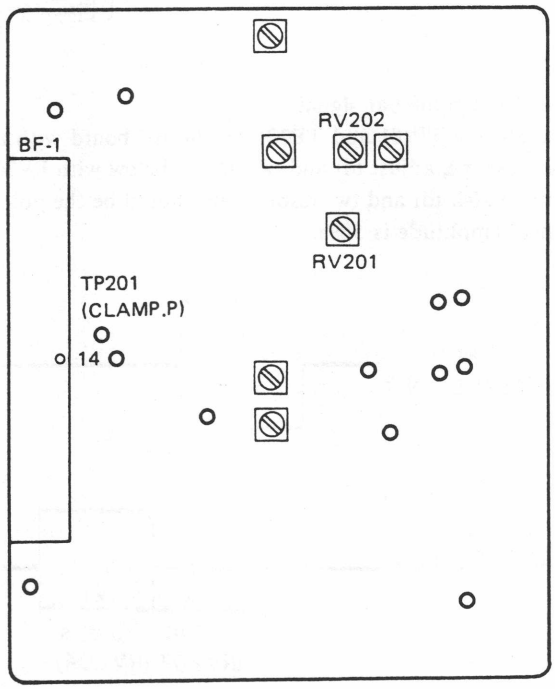

Note:

As shown in Fig. 1, td_2 and tw_2 are values for the case of $t > 3.3$ μs.

As shown in Fig. 2, when the HD phase is delayed and $t \leqq 3.3$ μs, the clamp pulse enters into the video signal period. When the HD signal like $t \leqq 3.3$ μs is input, adjust to obtain the following.

$td_2 + tw_2 < t$

$tw_2 \geqq 0.8$ μs

Fig. 1

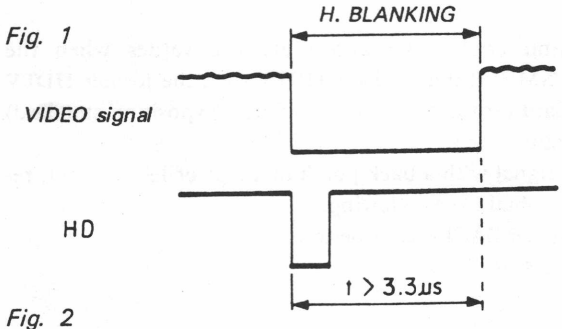

Fig. 2

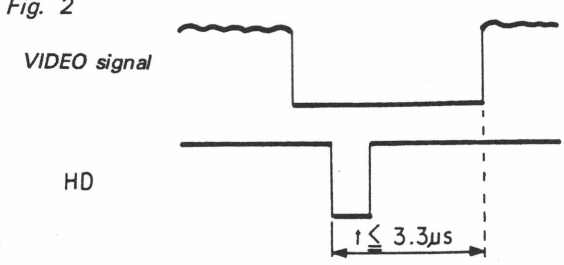

7. BG BOARD ADJUSTMENT

OFFSET ADJUSTMENT OF BG BOARD MULTIPLIER (MC1495L)

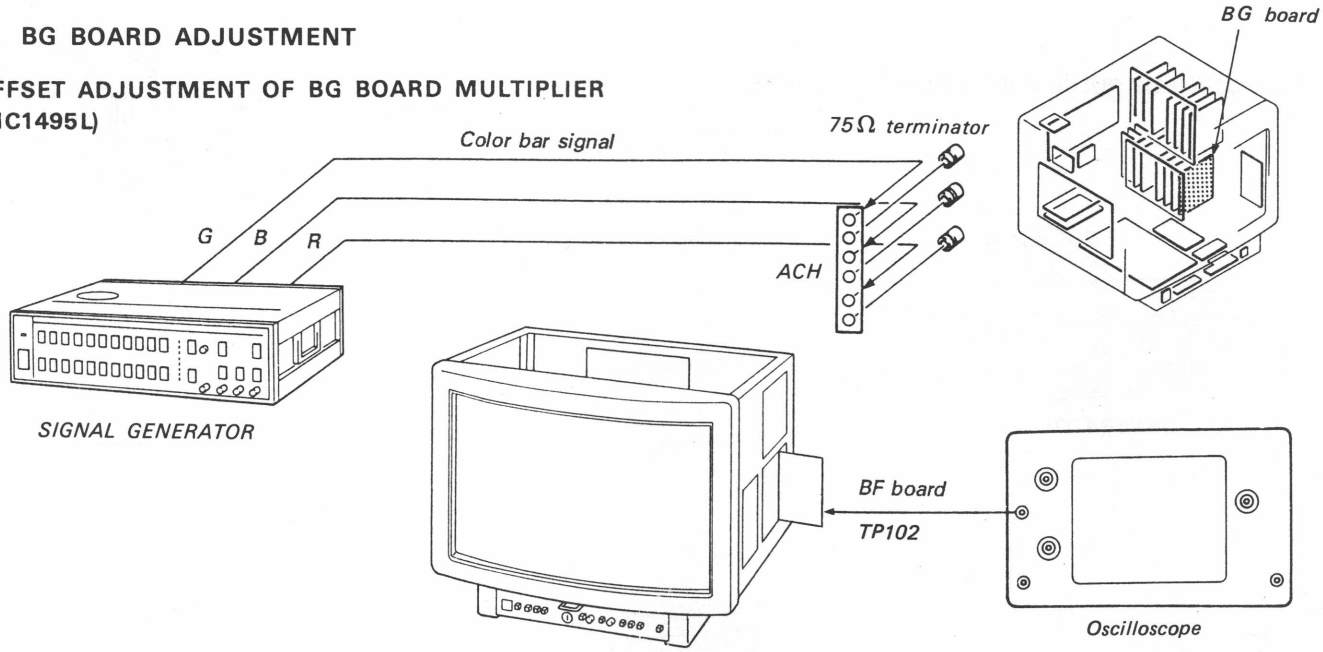

1. Input the dot signal.
2. Set the CONTRAST MANUAL SW to ON.
3. Set the BRIGHTNESS MANUAL SW to ON.
4. Connect **TP106** on the BG board to GND.
5. Connect the oscilloscope probe to **TP102** on the BG board.
6. Adjust OFFSET-2 (RV102) so that the DC level of **TP102** does not change (amount of change within 20 mV) when the CONTRAST MANUAL control of the front panel is turned.
7. Remove **TP106** on the BG board from GND and connect TP105 (CONTRAST) to GND.
8. Adjust OFFSET-1 (RV103) so that the DC level of **TP102** does not change (amount of change within 20 mV) when the BRIGHTNESS MANUAL control of the front panel is turned.
9. While TP105 is connected to GND, adjust OFFSET-3 (RV101) so that the DC level of TP107 becomes 0V (0V±10 mV).

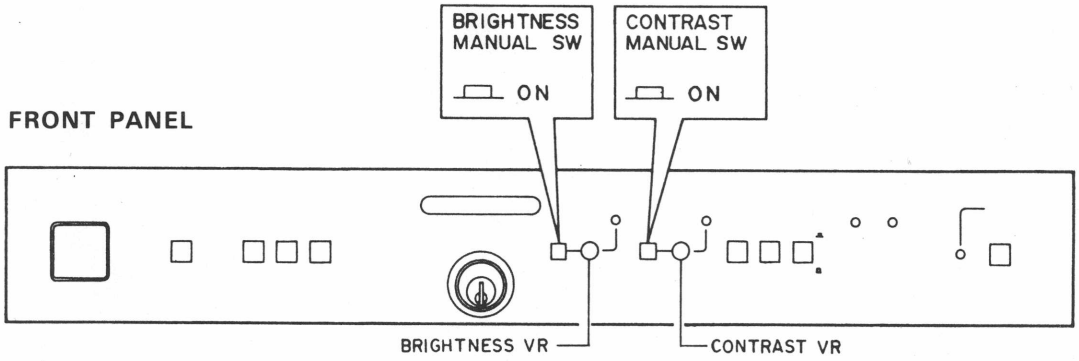

[ADJUSTING OF PULSE WIDTH AND PULSE PHASE]

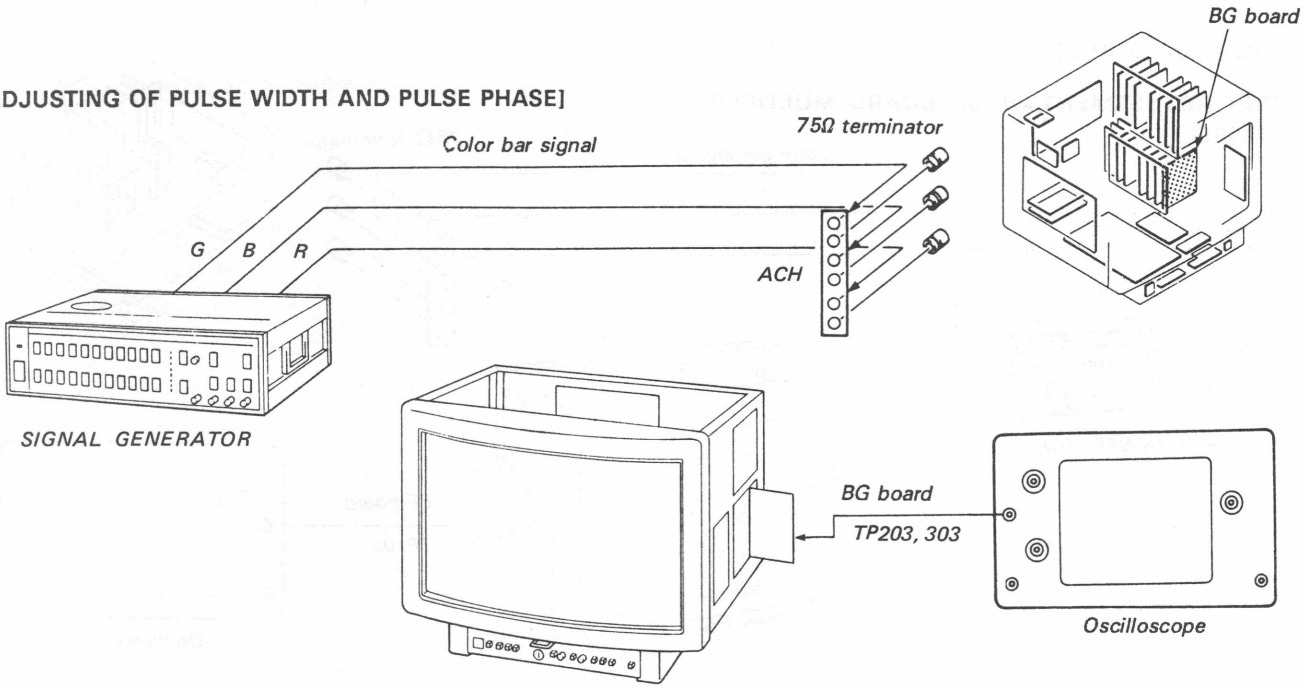

1. Input the color bar signal.
2. As shown in the Fig. below, adjust the phases of TP303 and TP203 with RV201.
3. Adjust the pulse width of TP303 with RV202.

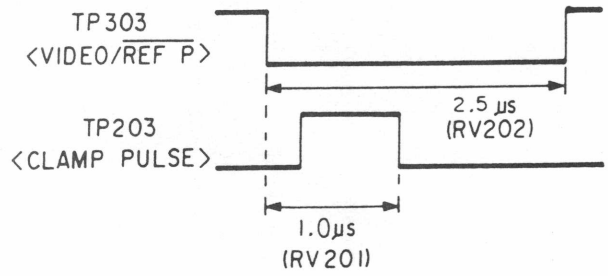

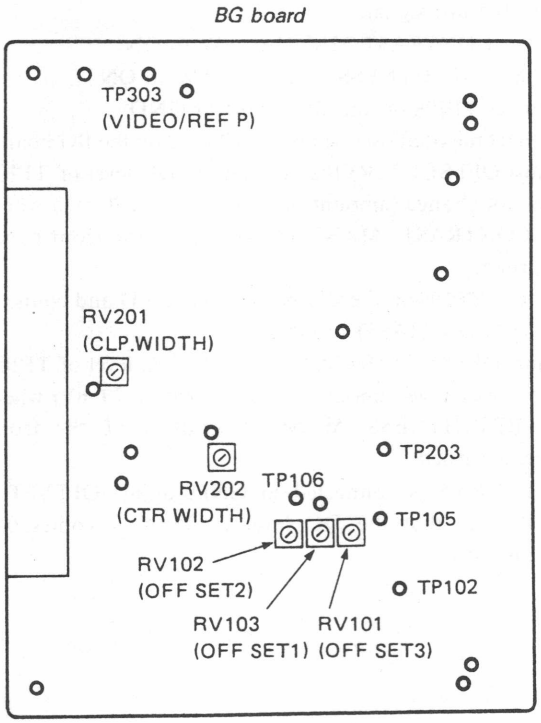

Note:

Measurements should be performed at 50% of the pulse amplitude.

8. CA BOARD ADJUSTMENT

CA BOARD PULSE RESPONSE ADJUSTMENT

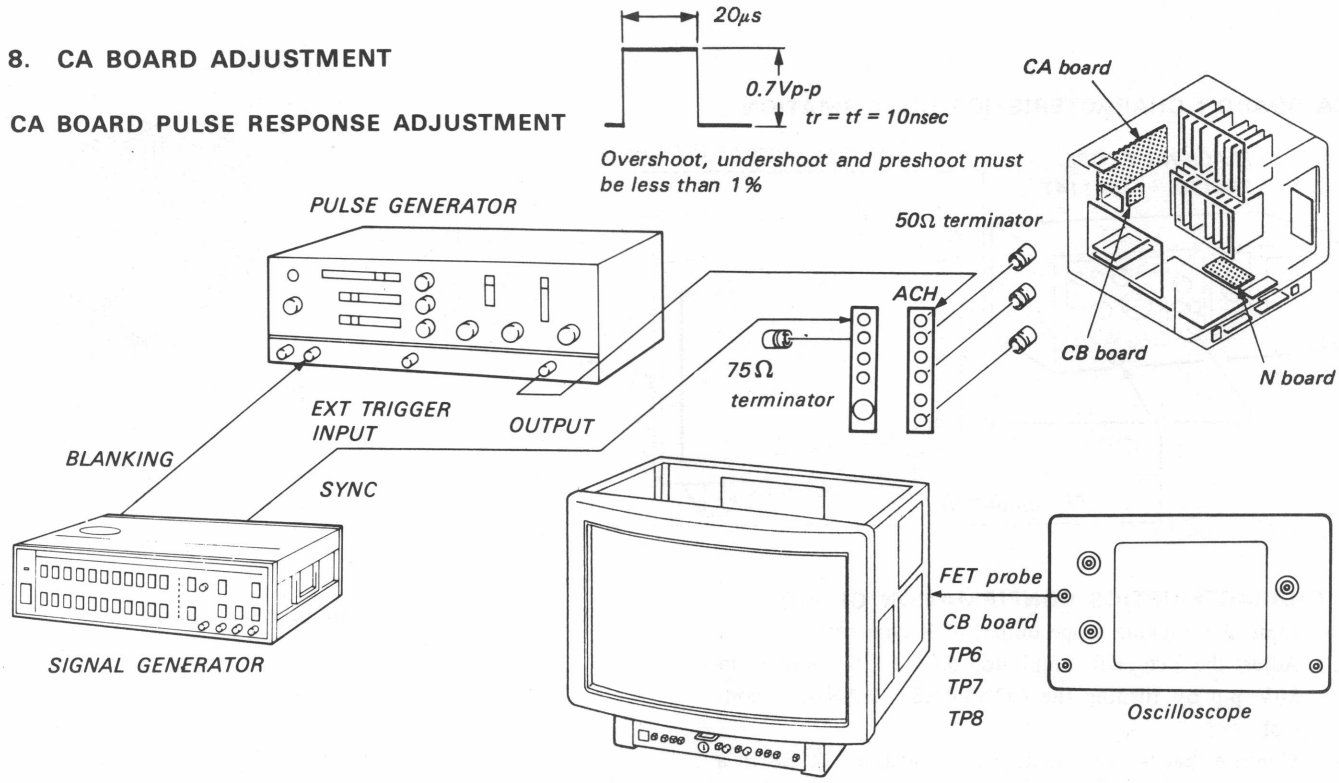

1. Pulse response adjustment of KR.(Use a FET probe.)
   1) Set the SYNC SW of the front panel to EXT (⊓).
   2) Input the pulse generator output to R channel.
   3) Adjust the TP6 (KR) amplitude on the CB board to 50 Vp-p by turning the CONTRAST MANUAL control.
   4) Adjust the overshoot undershoot and preshoot within 10% with R HIGH FREQUENCY (CV1).
2. Adjust KG and KB in the same manner as the above.
   1) Adjust KG with TP7 and CV201.
   2) Adjsut KB with TP8 and CV401.
3. Set the [INPUT/TEST] key on the N board (Control unit) to the TEST side, and confirm that there is no smear in the GRAY SCALE.

NOTE :

- As to the CA board and CB board, see page 4-50.
- The input signal should be 0.7Vp-p (during 50Ω termination), the pulse width 20μsc rising and lowering times 10 nsec, and overshoot undershoot and preshoot less than 1%

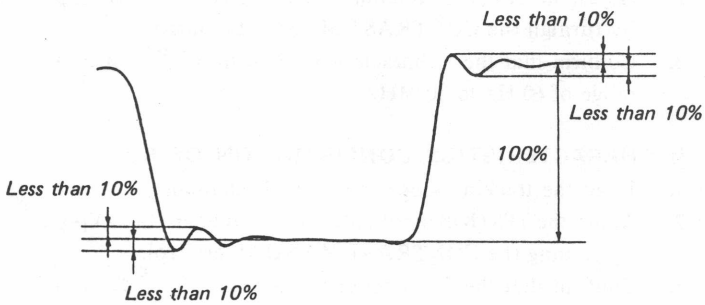

Waveform of TP6, TP7 and TP8

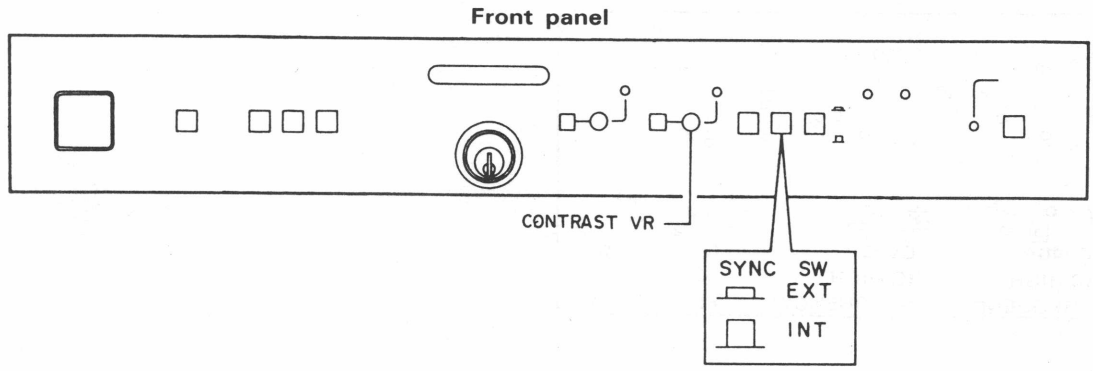

CA BOARD f CHARACTERISTICS CONFIRMATION

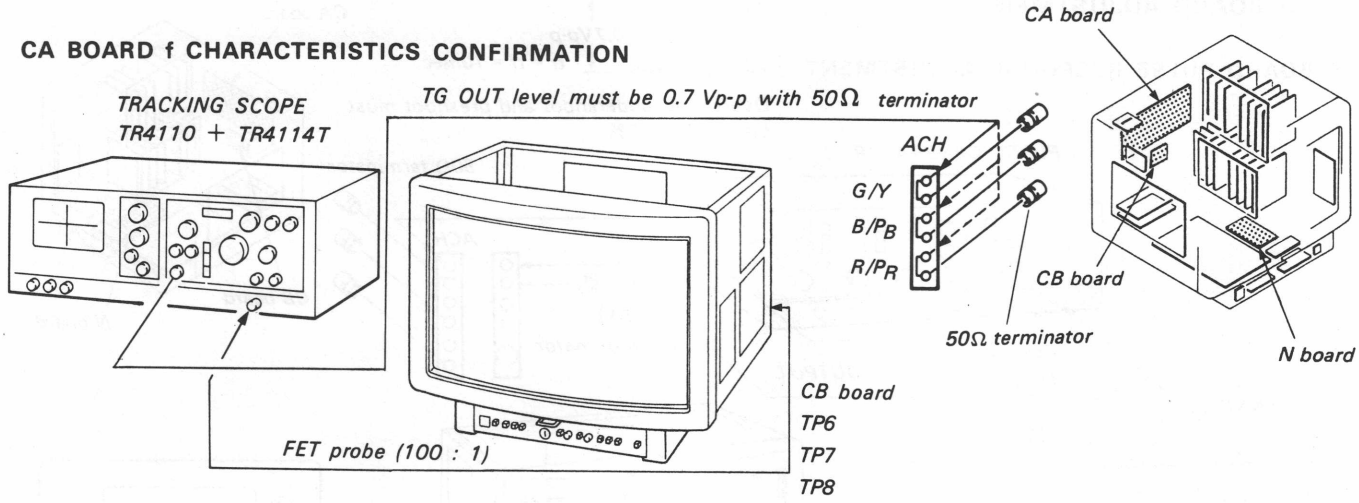

[f CHARACTERISTICS CONFIRMATION OF KR]

1. Input the tracking scope output to R channel.
2. Adjust the TP6 (KR) amplitude on the CB board to to 50V p-p by turning the CONTRAST MANUAL control.
3. Confirm that the f characteristics is within $\frac{+0.5}{-2}$ dB in a range of 60 Hz to 30 MHz.

[f CHARACTERISTICS CONFIRMATION OF KG]

1. Input the tracking scope output to G channel.
2. Adjust the TP7 (KG) amplitude on the CB board to 50 Vp-p by turnign the CONTRAST MANUAL control.
3. Confirm that the f characteristics is within $\frac{+0.5}{-2}$ dB in a range of 60 Hz to 30 MHz.

[f CHARACTERISTICS CONFIRMATION OF KB]

1. Input the tracking scope output to B channel.
2. Adjust the TP8 (KB) amplitude on the CB board to 50 Vp-p by turning the CONTRAST MANUAL control.
3. Confirm that the f characteristics is within $\frac{+0.5}{-2}$ dB in a range of 60 Hz to 30 MHz.
4. Set the INPUT/TEST key on the control unit (N board) to the TEST side and be sure that there is no smear in the GRAY SCALE.

   Note: If there are out of specifications, perform the adjustment in page 4-49 again and confirm the frequency characteristics.

Control unit (N board)

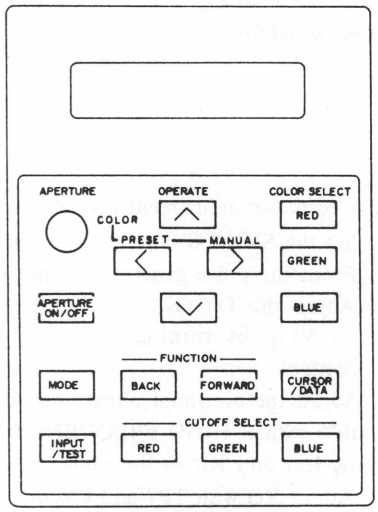

CB board

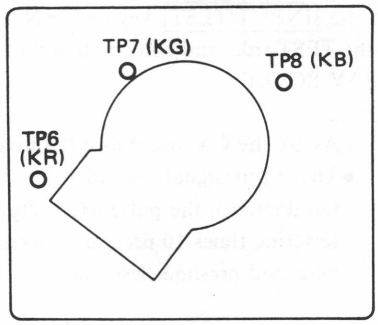

CA board

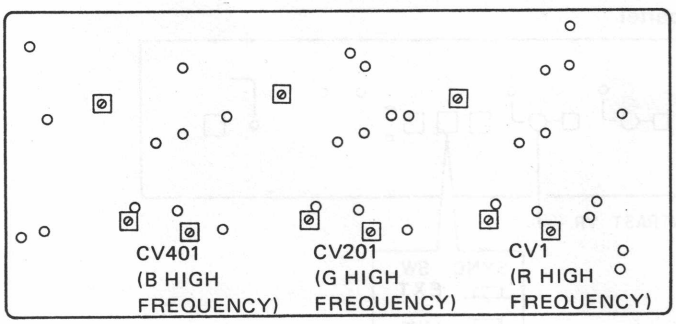

BLOCK DIAGRAMS BLOCK DIAGRAMS

BLOCK DIAGRAMS

SECTION 5
DIAGRAMS

5-1. BLOCK DIAGRAM
SIGNAL PROCESSING BLOCK DIAGRAM

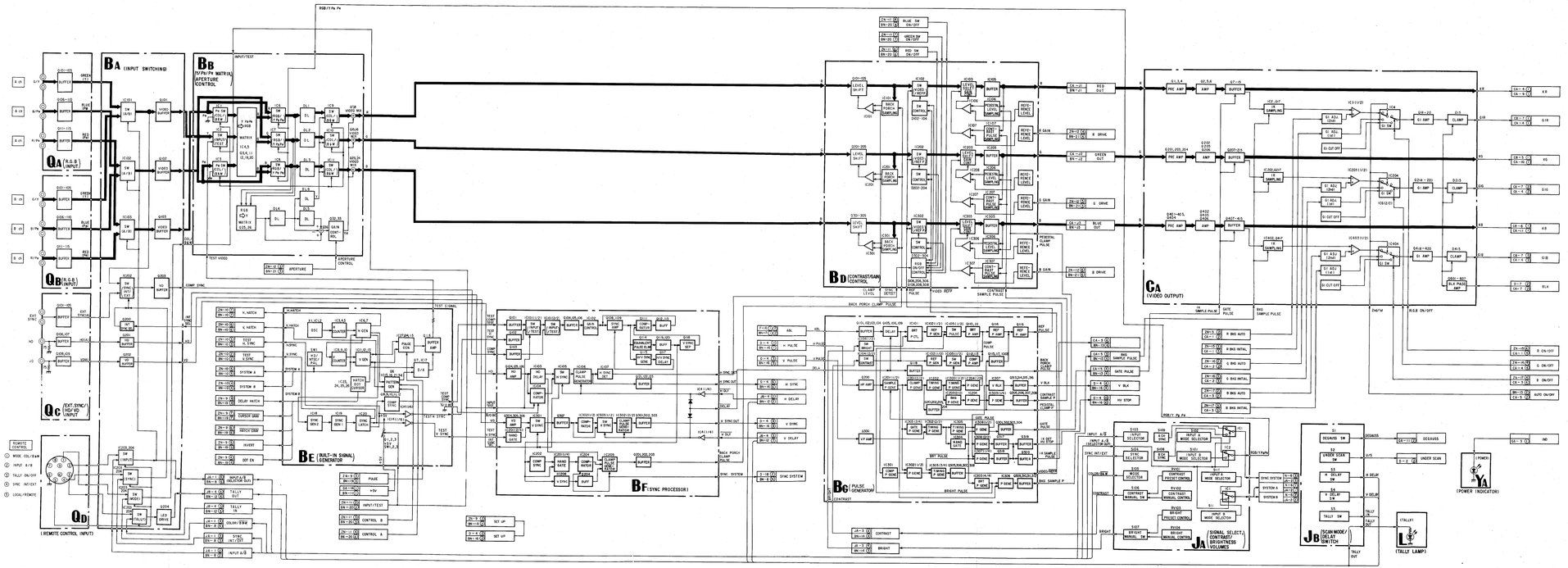

CONTROL PROCESSING BLOCK DIAGRAM

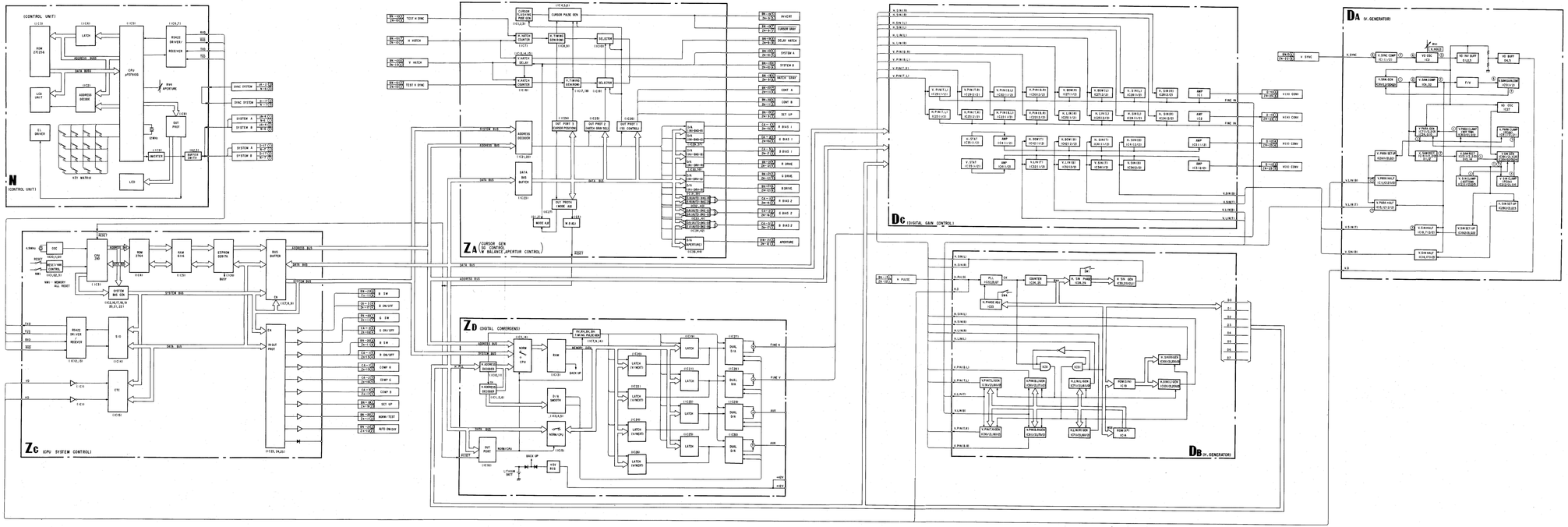
(CONTROL UNIT)
N
(CONTROL UNIT)
ZA (CURSOR GEN
W. BALANCE/APERTURE CONTROL)
ZC (CPU SYSTEM CONTROL)
ZD (DIGITAL CONVERGENCE)
Dc (DIGITAL GAIN CONTROL)
DA IV. GENERATOR
DB III. GENERATOR
CPU
EEPROM
RAM
ROM
DSC
RESET
SYSTEM BUS
ADDRESS BUS
DATA BUS
EEPROM BUS
CURSOR PAINT GEN
CURSOR X ASSIGN/PAIR SIGN
X WATCH COUNTER
X WATCH DELAY
X WATCH COUNTER
Y WATCH TIMING GEN/DEM
Y WATCH COUNTER
SELECTOR
ADDRESS DECODER
DATA BUS BUFFER
INT PORT 0
INT PORT 1
INT PORT 2
INT PROT 3 (I2C CONTROL)
MODE ADJ
W.B ADJ
PLL
COUNTER
V. SYN GEN
H. SYN GEN
PHASE ADJ
H. SYNC
V. SYNC
H. BLK
V. BLK
H. PULSE
V. PULSE
FINE H
FINE V
AUX
ADJ
LATCH
DUAL D/A
RAM
ROM
CPU
SMOOTH
NORM/CPU
BACK UP
LITHIUM BATT
EEP ROM
SYSTEM CONTROL
RESET/STAND BY CONTROL
WW : MEMORY ALL RESET
SYSTEM BUS GEN
RS-232C
REMOTE CONTROL
BUS BUFFER
I/O
CTC
INT PORT
SYSTEM A
SYSTEM B
SYSTEM C
SYSTEM D
SYNC SYSTEM
KEY MATRIX
LED
LCD UNIT
ROM 27C256
LATCH
CPU 4PSF5400
RS422 DRIVER/RECEIVER
ADDRESS DECODE
OUT PORT
SWITCH
BATTERY BACK UP
PIX APERTURE
SCAN APERTURE
H. SYNC
V. SYNC
H. BLK
V. BLK
R. SYNC
G. SYNC
B. SYNC
R. VIDEO
G. VIDEO
B. VIDEO
R. BIAS
G. BIAS
B. BIAS
R. DRIVE
G. DRIVE
B. DRIVE
R. CUT OFF
G. CUT OFF
B. CUT OFF
SUB CONT
SUB BRIGHT
SUB COLOR
SUB TINT
SUB SHARP
SUB H. PHASE
SUB V. POSITION
SUB V. SIZE
SUB V. LINEARITY
SUB V. S-CORRECTION
SUB H. POSITION
SUB H. SIZE
SUB PARABOLA
SUB TRAPEZOID
SUB CORNER
SUB PINCUSHION
SUB ROTATION
SUB BOW
SUB H. STATIC CONVERGENCE
SUB V. STATIC CONVERGENCE
SUB H. DYNAMIC CONVERGENCE
SUB V. DYNAMIC CONVERGENCE
SUB H. KEYSTONE
SUB V. KEYSTONE
SUB H. CORNER
SUB V. CORNER
SUB H. PARABOLA
SUB V. PARABOLA
SUB H. TRAPEZOID
SUB V. TRAPEZOID
SUB H. PINCUSHION
SUB V. PINCUSHION
SUB H. ROTATION
SUB V. ROTATION
SUB H. BOW
SUB V. BOW
SUB H. S-CORRECTION
SUB V. S-CORRECTION
SUB H. POSITION
SUB V. POSITION
SUB H. SIZE
SUB V. SIZE
SUB H. LINEARITY
SUB V. LINEARITY
SUB H. PHASE
SUB V. PHASE
SUB H. SIZE
SUB V. SIZE

BLOCK DIAGRAMS BLOCK DIAGRAMS

DEFLECTION PROCESSING BLOCK DIAGRAM

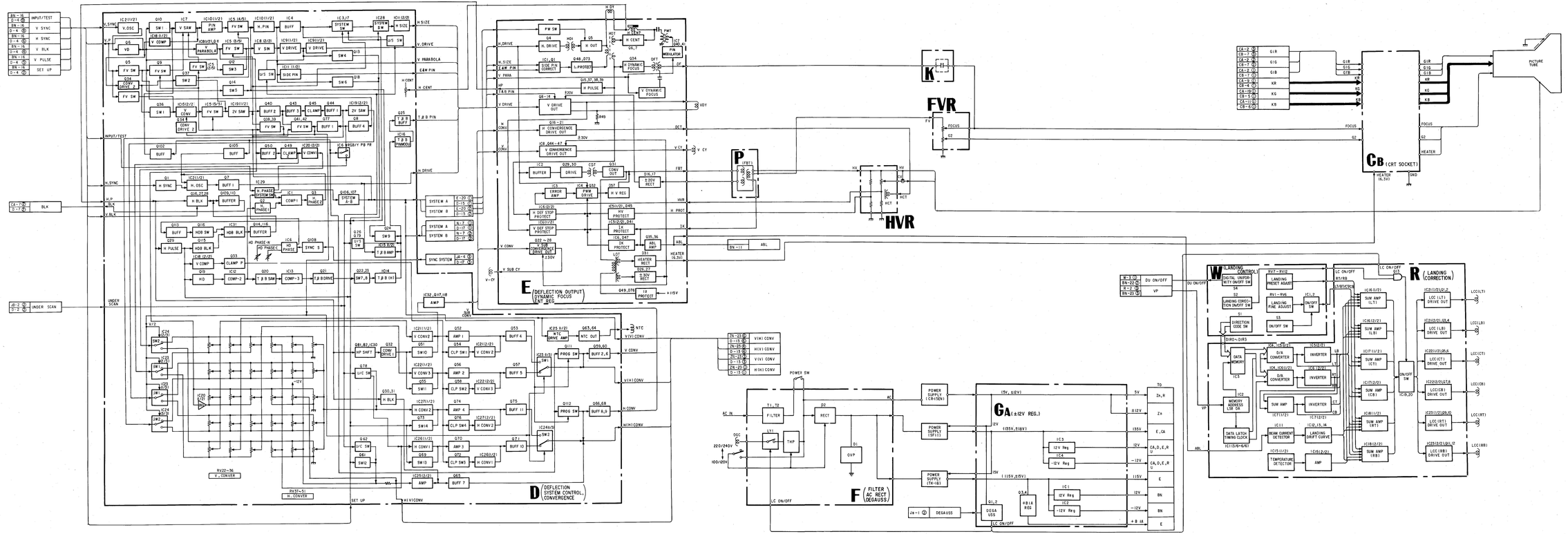

FRAME FRAME

5-2. FRAME WIRING DIAGRAM

※ NOTE

Ref \ Model	HDM-2830	HDM-2830E
F901(FUSE)	6.3A/125V	4A/250V

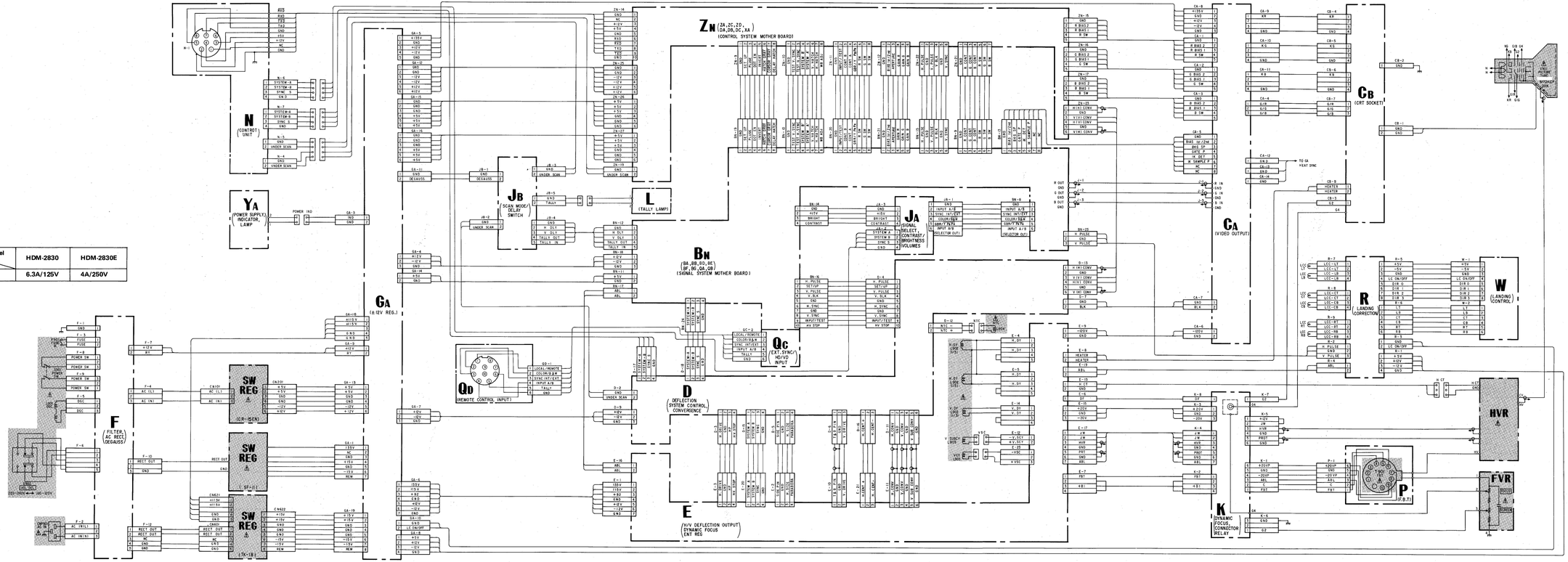

5-3. MOUNTING AND SCHEMATIC DIAGRAMS

— Conductor Side —

Note: The components identified by shading and mark ⚠ are critical for safety. Replace only with part number specified.

Note:

- All capacitors are in μF unless otherwise noted. P : μμF 50WV or less are not indicated except for electrolytics.
- All resistor are in ohms, 1/6W on the BD, DA, DB, DC, QA, QB, R, W, ZA and ZD board and 1/4W on the rest of the boards unless otherwise specified 1/6W, 1% for metal (RN) unless otherwise specified.
- : nonflamable resistor.
- : fusible resistor.
- △ : internal component.
- : panel designation.
- All variable and adjustable resistors have characteristic curve B, unless otherwise noted.
- The components identified by ☒ in this manual have been carefully factory-selected for each set in order to satisfy regulations regarding X-ray radiation. Should replacement be required, replace only with the value originally used.
- When replacing components identified by ◪ mark the necessary adjustments indicated. If results do not meet the specified value, change the component identified by ☒ and repeat the adjustment until the specified value is achieved. (Refer to ☒ D40, ☒ R114, ☒ R115, ☒ R140, ☒ R141, ☒ R183 adjustment on page 4-19~4-22.)
  When replacing the part in below table, be sure to perform the related adjustment.

Part replaced (◪)	Adjustment (☒)
D40, R114, R115, R116, R184, RV2 (E board)	D40, R114, R115 (Page 4-19)
D39, R140, R141, R144, R183 (E board)	R140, R141, R183 (Page 4-19)

Reference information

RESISTOR	: RN	METAL FILM
	: RC	SOLID
	: FPRD	NONFLAMMABLE CARBON
	: FUSE	NONFLAMMABLE FUSIBLE
	: RS	NONFLAMMABLE METAL OXIDE
	: RB	NONFLAMMABLE CEMENT
	: RW	NONFLAMMABLE WIREWOUND
COIL	: LF-8L	MICRO INDUCTOR
CAPACITOR	: TA	TANTALUM
	: PS	STYROL
	: PP	POLYPROPYLENE
	: PT	MYLAR
	: MPS	METALIZED POLYESTER
	: MPP	METALIZED POLYPROPYLENE
	: ALB	BIPOLAR
	: ALT	HIGH TEMPERATURE
	: ALR	HIGH RIPPLE

- Voltages are dc with respect to ground unless otherwise noted.
- Readings are taken with a 10MΩ digital multimeter.
- Readings are taken with a color-bar signal input.

BE board

( ): INPUT/TEST selector (N board S14) . . . TEST
MODE switch (N board S10) . . . . INTERNAL TEST SIGNAL
FUNCTION switch (N board S11, S12) . . . . HATCH

BB board

< >: INPUT A mode selector (JA board S102) . . . . Y PB PR

- ✳ : Can not be measured.
- ——— : B + bus.
- – – – : B – bus.
- Voltage variations may be noted due to normal production tolerances.
- : adjustment for repair.

- Switches and controls are set as tollows unless otherwise noted

FRONT PANEL

1. INPUT switch ..... A (⊓)
2. SYNC switch ..... INT (⊓)
3. MODE switch ..... COLOR (⊓)
4. CONTRAST MANUAL switch ..... PRESET (⊓)
5. BRIGHTNESS MANUAL switch ..... PRESET (⊓)

JA board

6. SCAN MODE V DELAY switch ..... OFF (⊓)
7. SCAN MODE H DELAY switch ..... OFF (⊓)
8. SCAN MODE UNDER switch ..... OFF (⊓)

JB board

SUB CONTROL PANEL

9. Control unit ..... Initial condition — N board
   With the internal signal (at the power on time): TEST MODE
10. LANDING ADJ ON/OFF switch (SW2) ..... ON
11. LANDING ADJ DIRECTION switch (SW1) ..... Match to monitor setting direction. — W board
12. LANDING FINE ADJ ON/OFF switch (SW3) ..... OFF
13. INPUT A MODE SELECT switch (SW102) ..... GBR
14. INPUT B MODE SELECT switch (SW101) ..... GBR
15. INPUT A H PHASE SELECT switch (SW109) 16:9
16. INPUT B H PHASE SELECT switch (SW108) 16:9
17. INPUT A SYSTEM SELECT switch (SW113) ..... HDTV A
18. INPUT B SYSTEM SELECT switch (SW110) ..... HDTV A

JA board

NOTICE

This notice is applicable for USA and CANADA only.
If shipped to USA, use the UL LISTED power cord specified below for 220-240V operation.
If shipped to CANADA, use the CSA CERTIFIED power cord specified below for 220-240V operation.
Do not use any other power cord.

Plug Cap	Tandem blade with ground pin. (NEMA 6-15P Configuration)
Cord	Type SVT or SJT, three 16 or 18 AWG wires.
Length	Maximum 15, feet
Rating	Minimum 10A, 250V

BA board (INPUT SWITCHING)

IC	303 307 306 305 103 204 102 203 101 202 301
Q	303 305 304 301 302 306 204 307 103 102 101 200 203 202 201
D	302 308 306 307,305 101, 205 209 207 210 214 211 213 212 208 200 215 216 203 301,201
TP	TP001,202 TP103,102,101 TP004 TP201 TP003

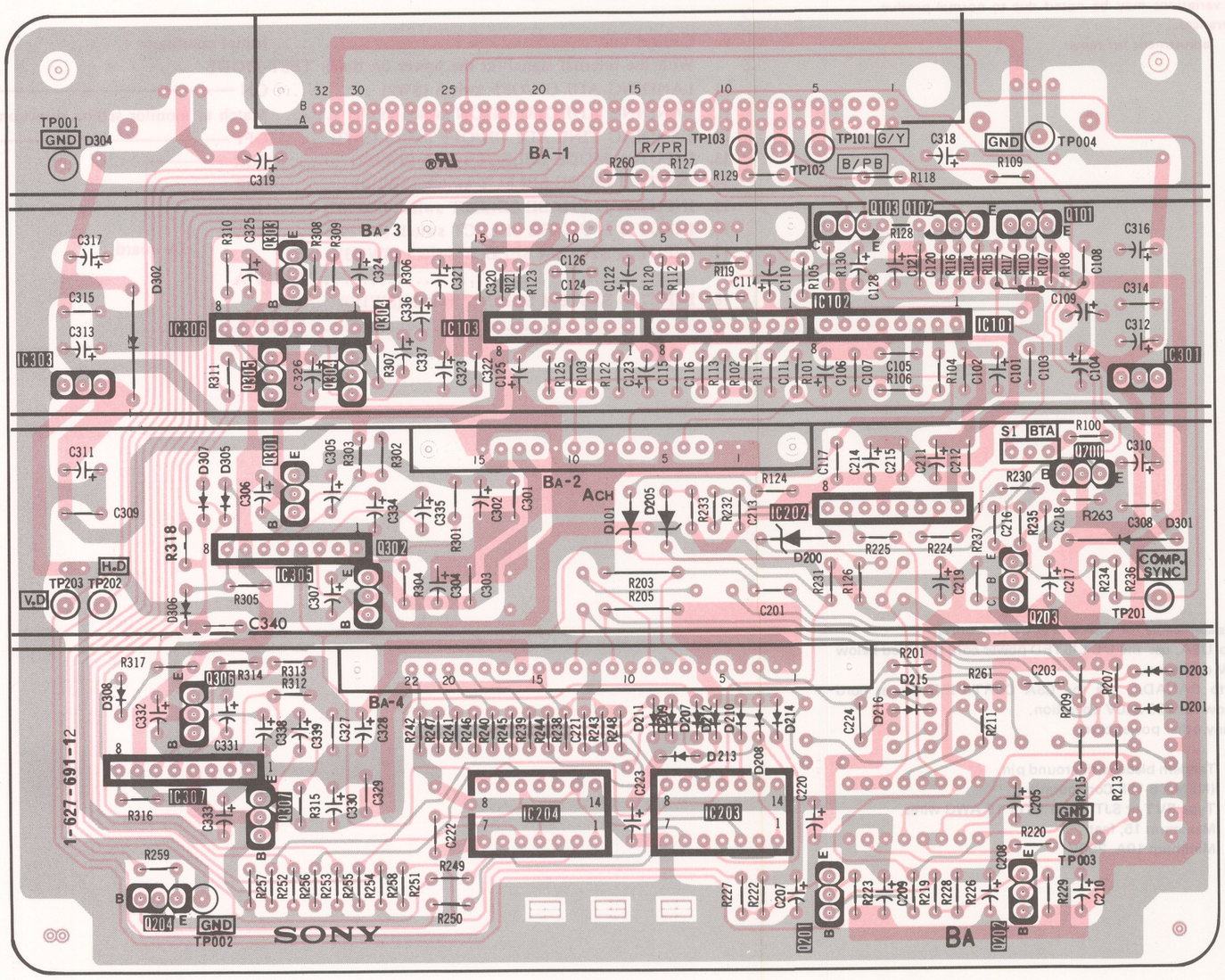

- : Conductor side pattern
- : Component side pattern

BA board (INPUT SWITCHING)

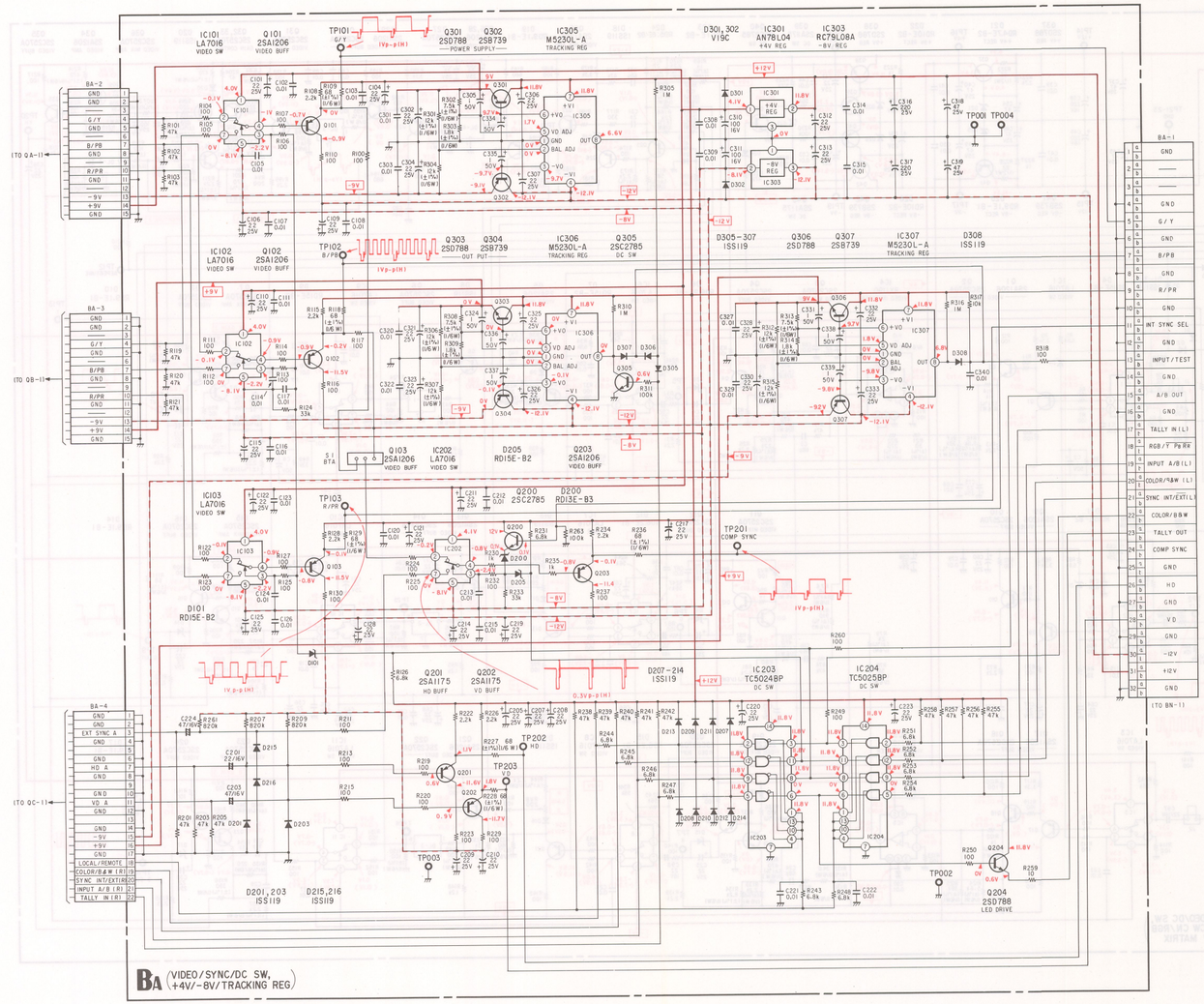

BA board

IC101	LA7016	VIDEO SW
102	LA7016	VIDEO SW
103	LA7016	VIDEO SW
202	LA7016	VIDEO SW
203	TC5024BP	DC SW
204	TC5025BP	DC SW
301	AN78L04	+4V REG
303	RC79L08A	-8V REG
305	M5230L-A	TRACKING REG
306	M5230L-A	TRACKING REG
307	M5230L-A	TRACKING REG
Q101	2SA1206	VIDEO BUFF
102	2SA1206	VIDEO BUFF
103	2SA1206	VIDEO BUFF
Q200	2SC2785	
201	2SA1175	HD BUFF
202	2SA1175	VD BUFF
203	2SA1206	VIDEO BUFF
204	2SD788	LED DRIVE
301	2SD788	POWER SUPPLY
302	2SB739	POWER SUPPLY
303	2SD788	OUTPUT
304	2SB739	OUTPUT
305	2SC2785	DC SW
306	2SD788	
307	2SB739	
D101	RD15EB2	
D200	RD13EB3	
201	1SS119	
203	1SS119	
205	RD15EB2	
207	1SS119	
208	1SS119	
209	1SS119	
210	1SS119	
211	1SS119	
212	1SS119	
213	1SS119	
214	1SS119	
215	1SS119	
216	1SS119	
301	V19C	
302	V19C	
305	1SS119	
306	1SS119	
307	1SS119	
308	1SS119	

BB board

IC1	LA7016	VIDEO SW
2	LA7016	VIDEO SW
3	LA7016	VIDEO SW
4	BX-1190	VIDEO INVERTER
5	BX-1190	VIDEO INVERTER
6	LA7016	VIDEO SW
7	LA7016	VIDEO SW
8	LA7016	VIDEO SW
9	LA7016	VIDEO SW
10	LA7016	VIDEO SW
11	LA7016	VIDEO SW
Q1	2SA1206	VIDEO BUFF
2	2SC2570A	VIDEO BUFF
3	2SC2570A	VIDEO MIX AMP
4	2SC2570A	VIDEO BUFF
5	2SA1206	VIDEO BUFF
6	2SC2570A	VIDEO BUFF
7	2SC2570A	VIDEO MIX AMP
8	2SC2570A	VIDEO BUFF
9	2SA1206	VIDEO BUFF
10	2SC2570A	VIDEO BUFF
11	2SC2570A	VIDEO MIX AMP
12	2SC2570A	VIDEO BUFF
13	2SA1206	VIDEO BUFF
14	2SC2570A	VIDEO BUFF
15	2SC2570A	VIDEO MIX AMP
16	2SC2570A	VIDEO BUFF
17	2SA1206	VIDEO BUFF
18	2SC2570A	VIDEO BUFF
19	2SC2570A	VIDEO MIX AMP
20	2SC2570A	VIDEO BUFF
21	2SA1206	VIDEO BUFF
22	2SC2570A	VIDEO BUFF
23	2SC2570A	VIDEO MIX AMP
24	2SC2570A	VIDEO BUFF
25	2SA1206	VIDEO MIX AMP
26	2SA1206	VIDEO BUFF
27	2SC2570A	VIDEO BUFF
28	2SA1206	VIDEO BUFF
29	2SA1206	VIDEO BUFF

Q30	2SC2570A	VIDEO BUFF
31	2SC2570A	VIDEO BUFF
32	2SC2570A	GAIN CONTROL
33	2SC2570A	GAIN CONTROL
34	2SA1206	VIDEO AMP
35	2SC2570A	VIDEO BUFF
36	2SC2570A	VIDEO MIX AMP
37	2SD788	+4V REG
38	2SD788	+9V REG
39	2SA1175	DC SW
40	2SC2785	DC SW
41	2SB739	-8V REG
42	2SB739	-9V REG
43	2SA1175	DC SW
D1	1SS119	
2	1SS119	
3	1SS119	
4	RD15EB2	
5	1SS119	
6	RD6.2EB1	
7	RD15EB2	
8	1SS119	
9	RD15EB2	
10	RD9.1EB1	
11	RD15EB2	
12	RD6.2EB1	
13	1SS119	
14	RD9.1EB1	
15	RD6.2EB1	
16	1SS119	
17	RD9.1EB1	
18	1SS119	
19	RD9.1EB1	
20	1SS119	
21	RD4.7EB2	+4V REG
22	RD10EB2	+9V REG
23	RD11EB2	
24	RD5.6EB2	
25	RD9.1EB1	-8V REG
26	RD10EB2	-8V REG

BB board (YPBPR MATRIX, APERTURE CONTROL)

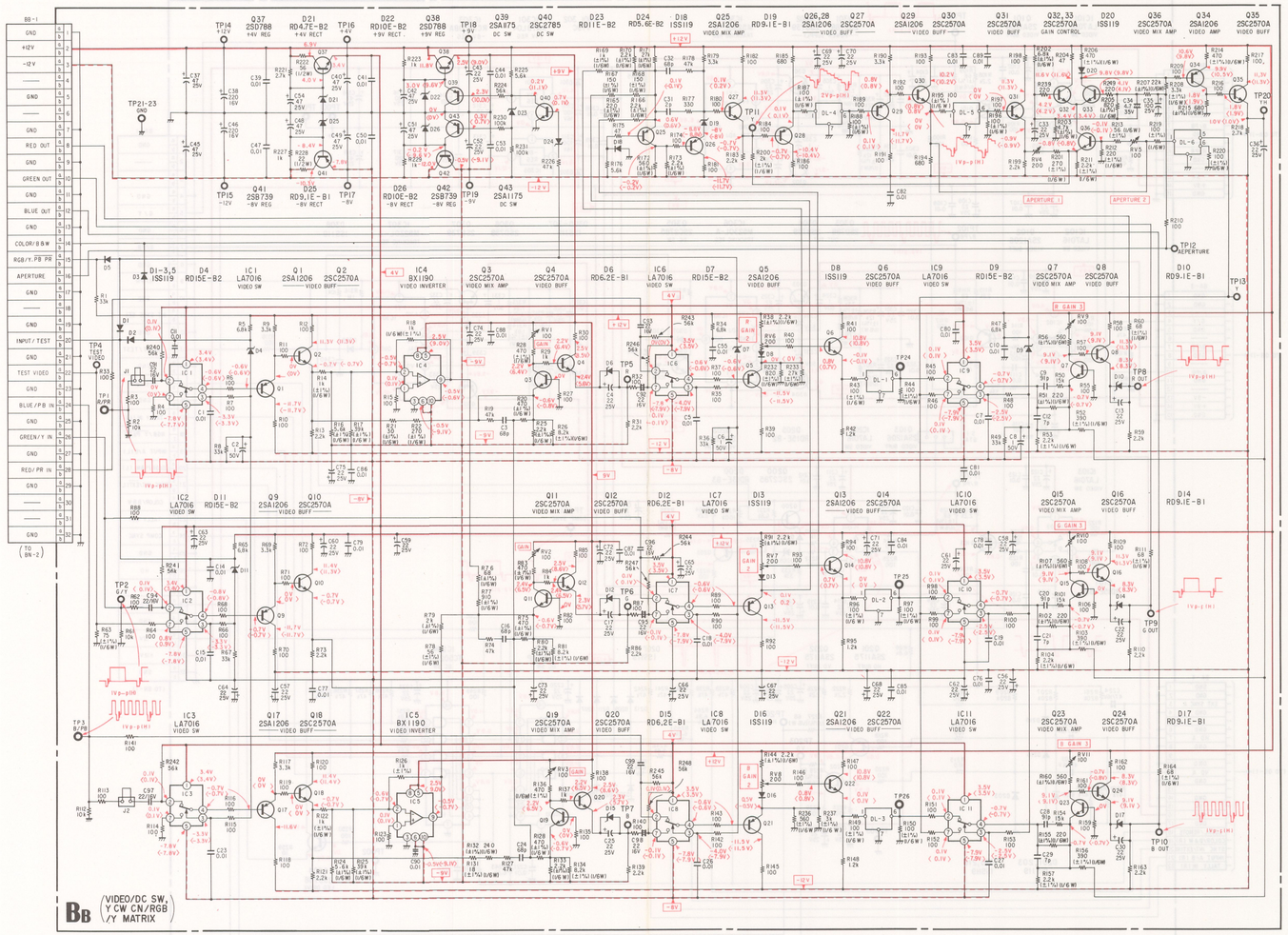

BB board (YPBPR MATRIX, APERTURE CONTROL)

IC	8 7 6 9 10 11 3 2 1 4 5
Q	41 38 39 19 31 30 29 28 27 26 25 21 22,13,5 14 6 42 43 40 20 36 32 12 11 34 33 17 18 3 37 35 9 10 4 7 8 15 16 23 24 1 2
D	25 19 16 13 8 22,23 21 20 26 24 15 18 6 12 10 14 17 9 11 4 7 1 5 2 3
ADJ TP	TPI7 TP22 TPI6 RV4 RV5 TPII,TPI3 TP6 TP7 TPI8 TP23 RV3 TPI5 TP20 TPI2 TP8 TP9 TPI0 TP5 TPI9 RV2 TPI4 TP2I RV1 TP4,TP3,TP2,TP1

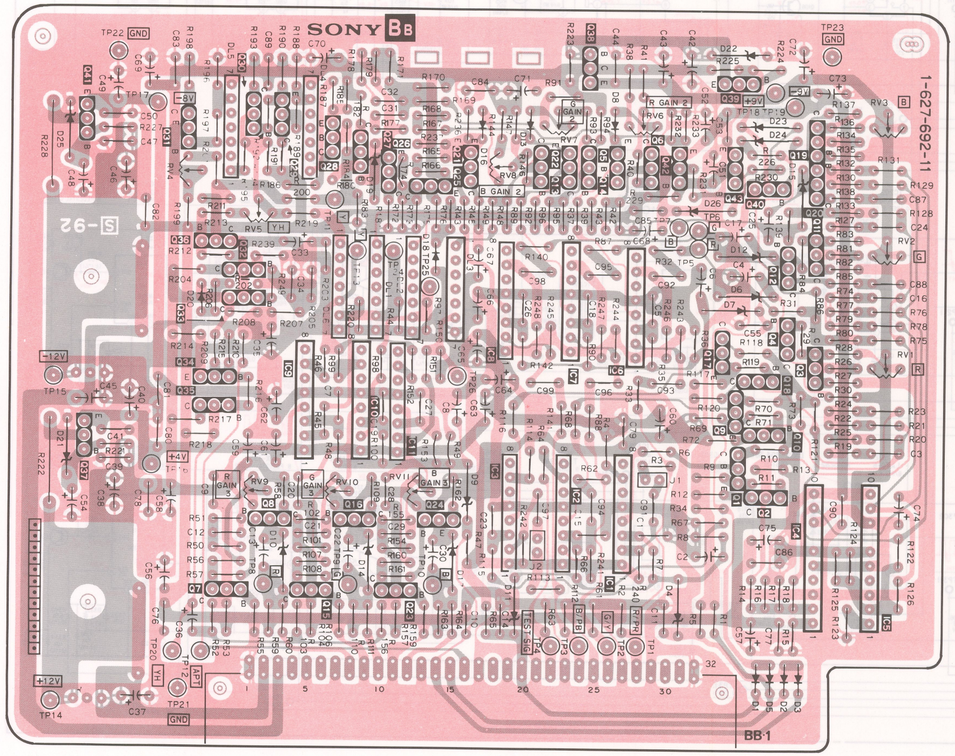

• : Conductor side pattern
• : Component side pattern

BD board

IC001	AN78L04	+4V REG
002	RC79L08A	-8V REG
101	BX-1313	R BACKPORCH CLAMP
102	LA7016	R/REF P SW
103	BX-1315	R CLAMP & AMP
104	TX-429M	R GAIN CTL
105	BX-1314	R BUFF
106	BX-1313	R PEDESTAL CLAMP
107	BX-1313	R DRIVE CTL
201	BX-1313	G BACKPORCH CLAMP
202	LA7016	G/REF P SW
203	BX-1315	G CLAMP & AMP
204	TX-429M	G GAIN CTL
205	BX-1314	G BUFF
206	BX-1313	G PEDESTAL CLAMP
207	BX-1313	G DRIVE CTL
301	BX-1313	B BACKPORCH CLAMP
302	LA7016	B/REF P SW
303	BX-1315	B CLAMP & AMP
304	TX-429M	B GAIN CTL
305	BX-1314	B BUFF
306	BX-1313	B PEDESTAL CLAMP
307	BX-1313	B DRIVE CTL
Q101	2SC2570A	R AMP
102	2SC2570A	R AMP
103	2SA1206	R AMP
104	2SA1206	R CLAMP
105	2SC2570A	R BUFF
106	2SK125	R CONT CTL RESET
107	2SA1048	R PEDESTAL CLAMP
108	2SA1048	R ON/OFF CTL
201	2SC2570A	G AMP
202	2SC2570A	G AMP
203	2SA1206	G AMP
204	2SA1206	G CLAMP
205	2SC2570A	G CLAMP
206	2SK125	G CONT CTL RESET
Q207	2SA1048	G PEDESTAL CLAMP
208	2SA1048	G ON/OFF CTL
301	2SC2570A	B AMP
302	2SC2570A	B AMP
303	2SA1206	B AMP
304	2SA1206	B CLAMP
305	2SC2570A	B CLAMP
306	2SK125	B CONT CTL RESET
307	2SA1048	B PEDESTAL CLAMP
308	2SA1048	B ON/OF CTL
D001	1SS119	
002	1SS119	
007	RD3.9EB1	
101	RD15EB2	
102	1SS119	
103	1SS119	
104	1SS119	
106	1SS119	
107	RD5.6EB1	
108	RD5.6EB1	
201	RD15EB2	
202	1SS119	
203	1SS119	
204	1SS119	
206	1SS119	
207	RD5.6EB1	
208	RD5.6EB1	
301	RD15EB2	
302	1SS119	
303	1SS119	
304	1SS119	
306	1SS119	
307	RD5.6EB1	
308	RD5.6EB1	

BD board (CONTRAST/GAIN CONTROL)

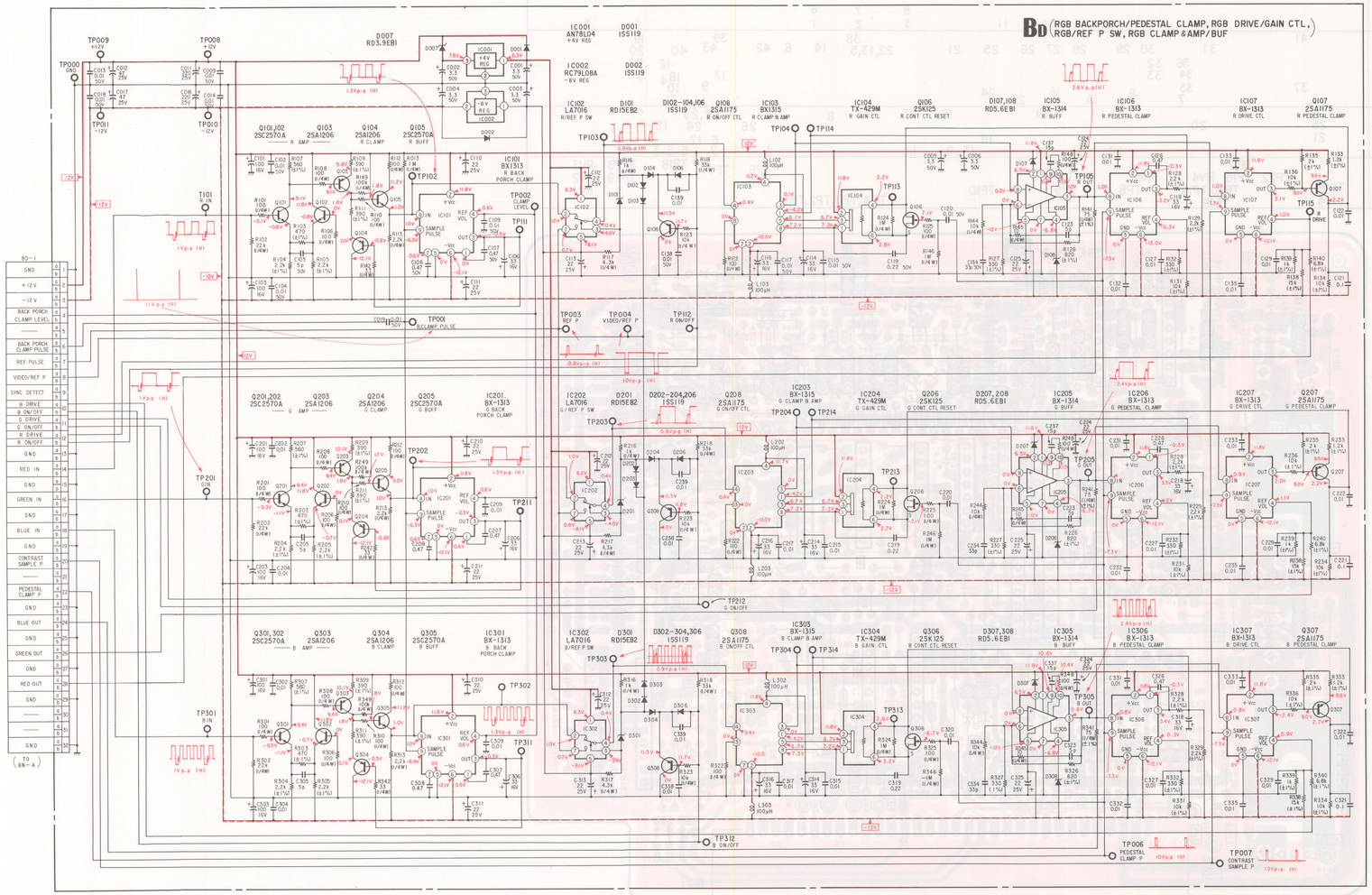

BD board (CONTRAST/GAIN CONTROL)

IC	Q	D	TP
			115
307 207 107			305 205 105
	307 207 107		
306 206 106			007
			006
305 205 105			
		308 208 108	213, 214
		307 207 107	313, 314,113,114
304 204 104	206, 106		
203			304
303	306		
103			204
			104
	208	204,106	
		306,202,104 101	
		304, 301, 201	
	308 108	302 102	303
		303,203 103	004 203 103
		206	
202 102			
302			212,112
			312
			003
			302,202,102 001
301 201 101			
			311, 211, 111
	204,205		002
	304,305,104,105		
001			
	303 203 103		009,011
	302, 202,102	007	101
	301, 201,101	001	301,201
002			000
		002	010
			008

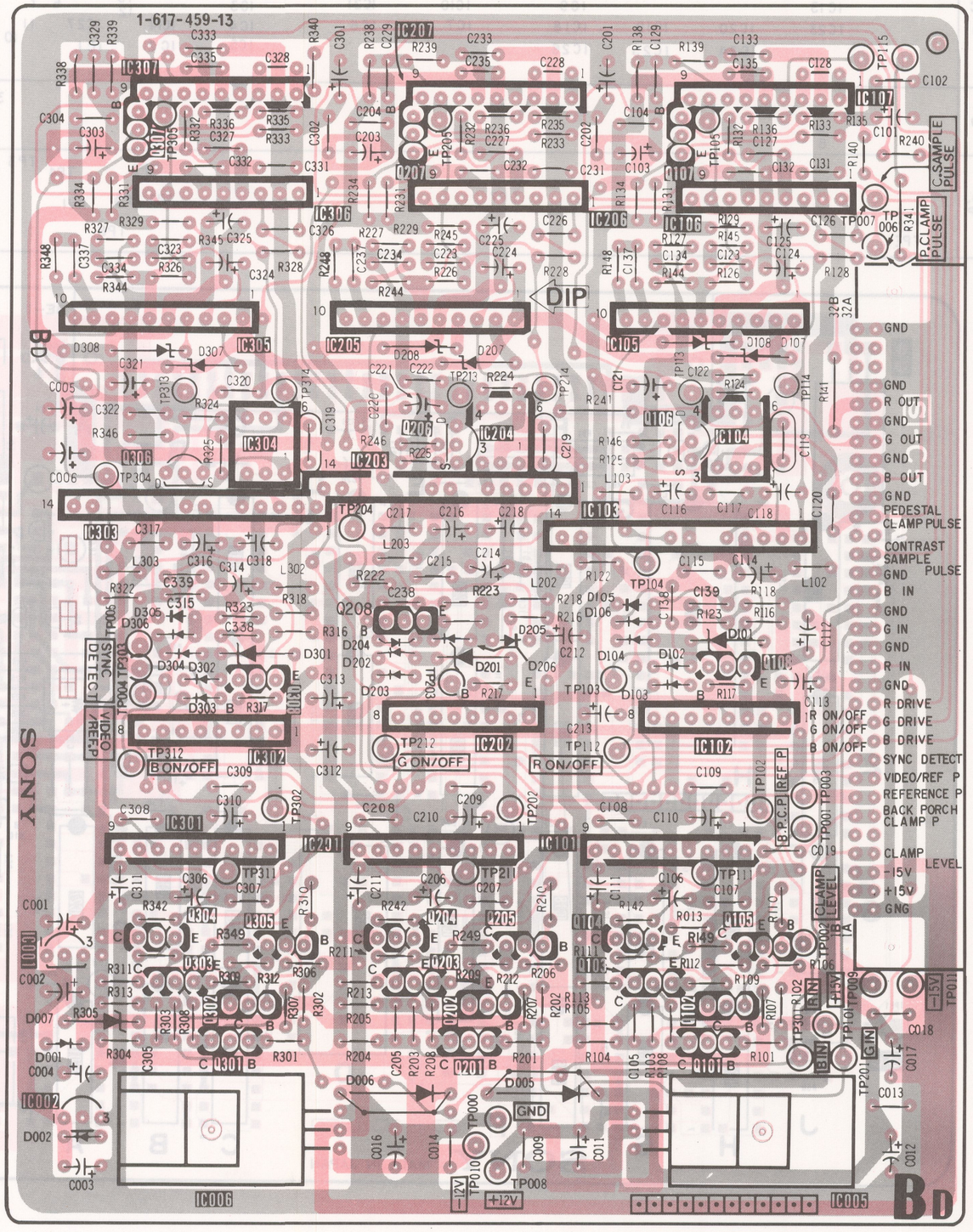

- : Conductor side pattern
- : Component side pattern

BE board (BUILT-IN SIGNAL GENERATOR)

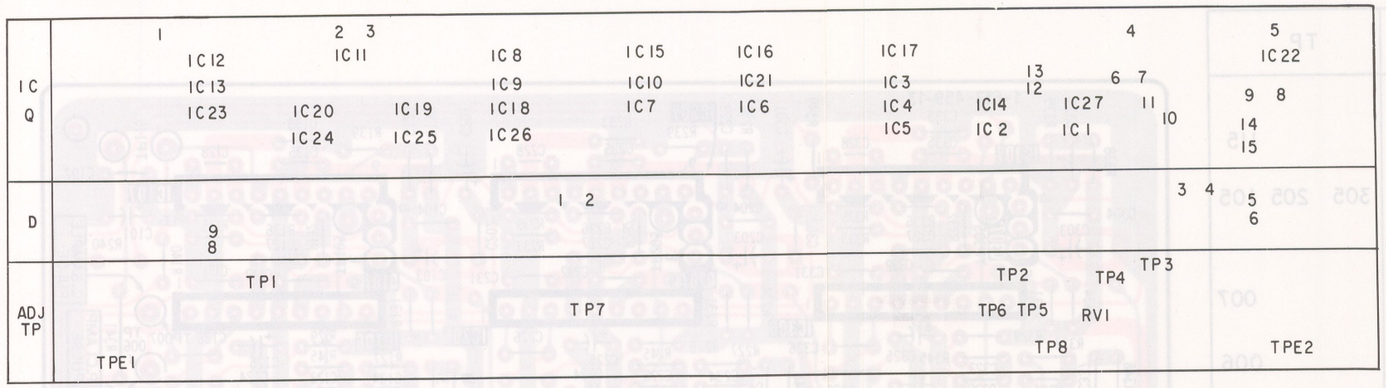

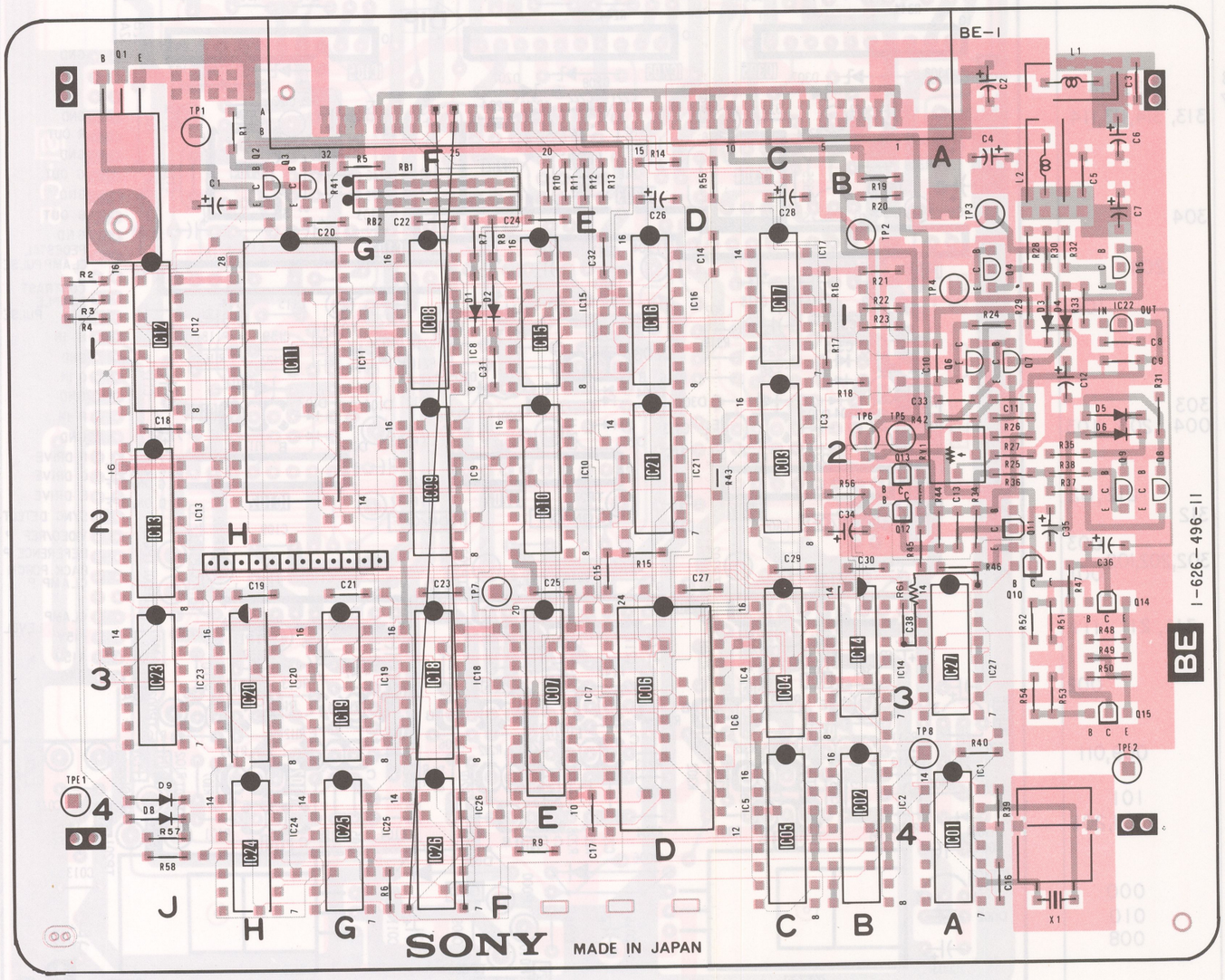

• : Conductor side pattern
• : Component side pattern

BE board (BUILT-IN SIGNAL GENERATOR)

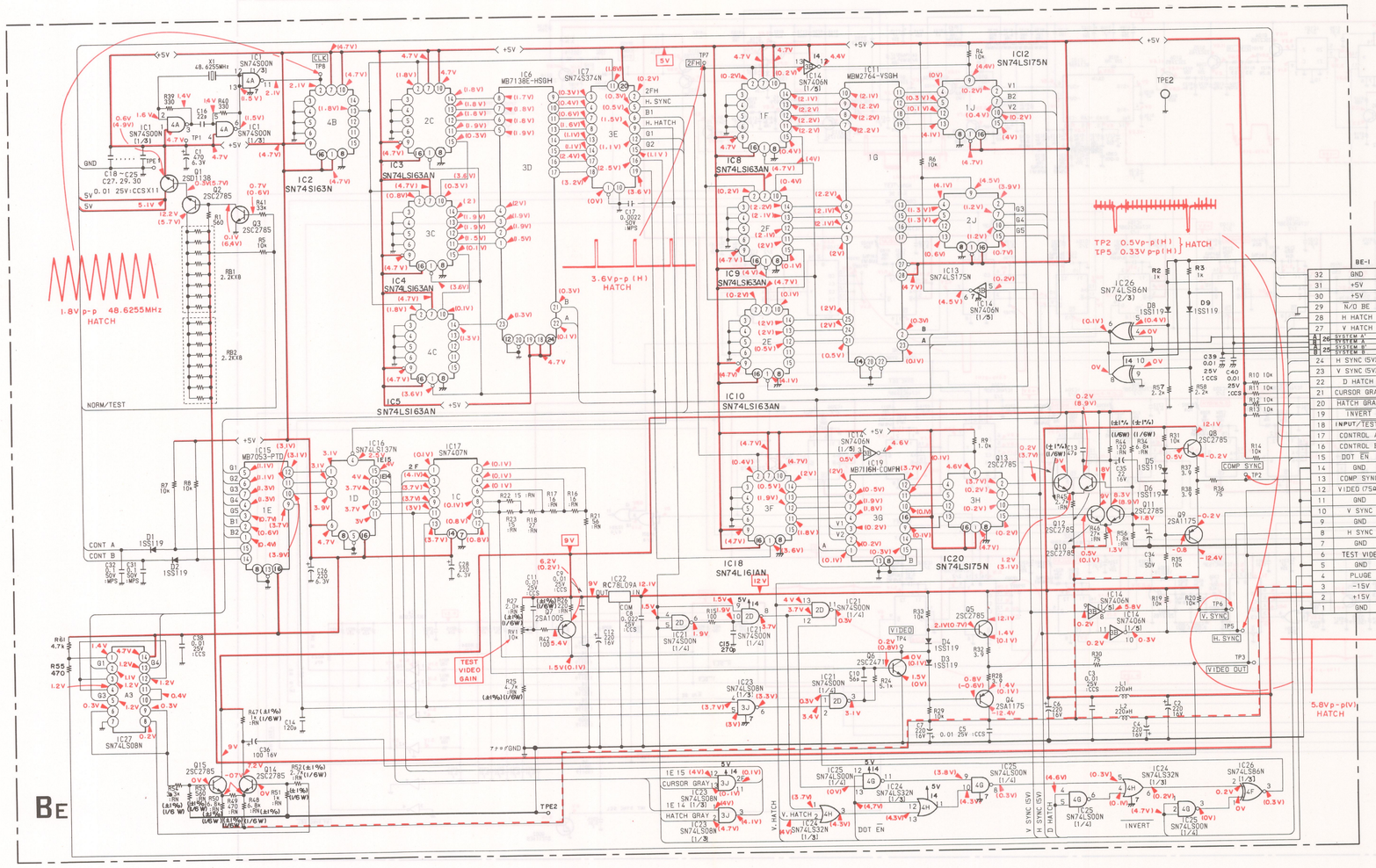

BE board

IC1	SN74S00N	OSC
2	SN74S163N	DIVIDER
3	SN74LS163AN	ADDRESS ENCODE 1
4	SN74LS163AN	ADDRESS ENCODE 2
5	SN74LS163AN	ADDRESS ENCODE 3
6	MB7138E-HSGH	H PULSE GEN
7	SN74S374N	H PULSE LATCH
8	SN74LS163AN	ADDRESS ENCODE 4
9	SN74LS163AN	ADDRESS ENCODE 5
10	SN74LS163AN	ADDRESS ENCODE 6
11	2764-VSGH	V PULSE GEN
12	SN74LS175N	V PULSE LATCH 1
13	SN74LS175N	V PULSE LATCH 2
14	SN7406N	OUTPUT BUFF
15	MB7053-PTD	PATTERN ENCODE
16	SN74LS137N	PATTERN ENCODE
17	SN7407N	LEVEL SELECT
18	SN74LS161AN	SYNC GEN 2
19	MB7053-COMPB	SYNC GEN 1
20	SN74LS175N	SYNC LATCH
21	SN74S00N	PULSE GEN
22	NJM78L09A	+9V REG
23	SN74LS08N	CONTROL PULSE GEN 1
24	SN74LS32N	CONTROL PULSE GEN 2
25	SN74LS00N	CONTROL PULSE GEN 3
26	SN74LS86N	CONTROL PULSE GEN 4
27	SN74LS08N	PULGE GEN
Q1	2SD1138	+5V SW1
2	2SC2785	+5V SW2
3	2SC2785	+5V SW3
4	2SA1175	BUFF 3
5	2SC2785	BUFF 1
6	2SC2471	HATCH GEN
7	2SA1005	CURRENT SOURCE
8	2SC2785	BUFF 2
9	2SA1175	BUFF 4
10	2SC2785	SYNC GEN 1
11	2SC2785	SYNC GEN 2
12	2SC2785	SYNC GEN 3
13	2SC2785	SYNC GEN 4
14	2SC2785	PULGE GEN 1
15	2SC2785	PULGE GEN 2
D1	1SS119	PROTECT 1
2	1SS119	PROTECT 2
3	1SS119	BIAS 1
4	1SS119	BIAS 2
5	1SS119	BIAS 3
6	1SS119	BIAS 4
7	1SS119	LEVEL SHIFT 1
8	1SS119	LEVEL SHIFT 2
9	1SS119	LEVEL SHIFT 3

BF board (SYNC PROCESSOR)

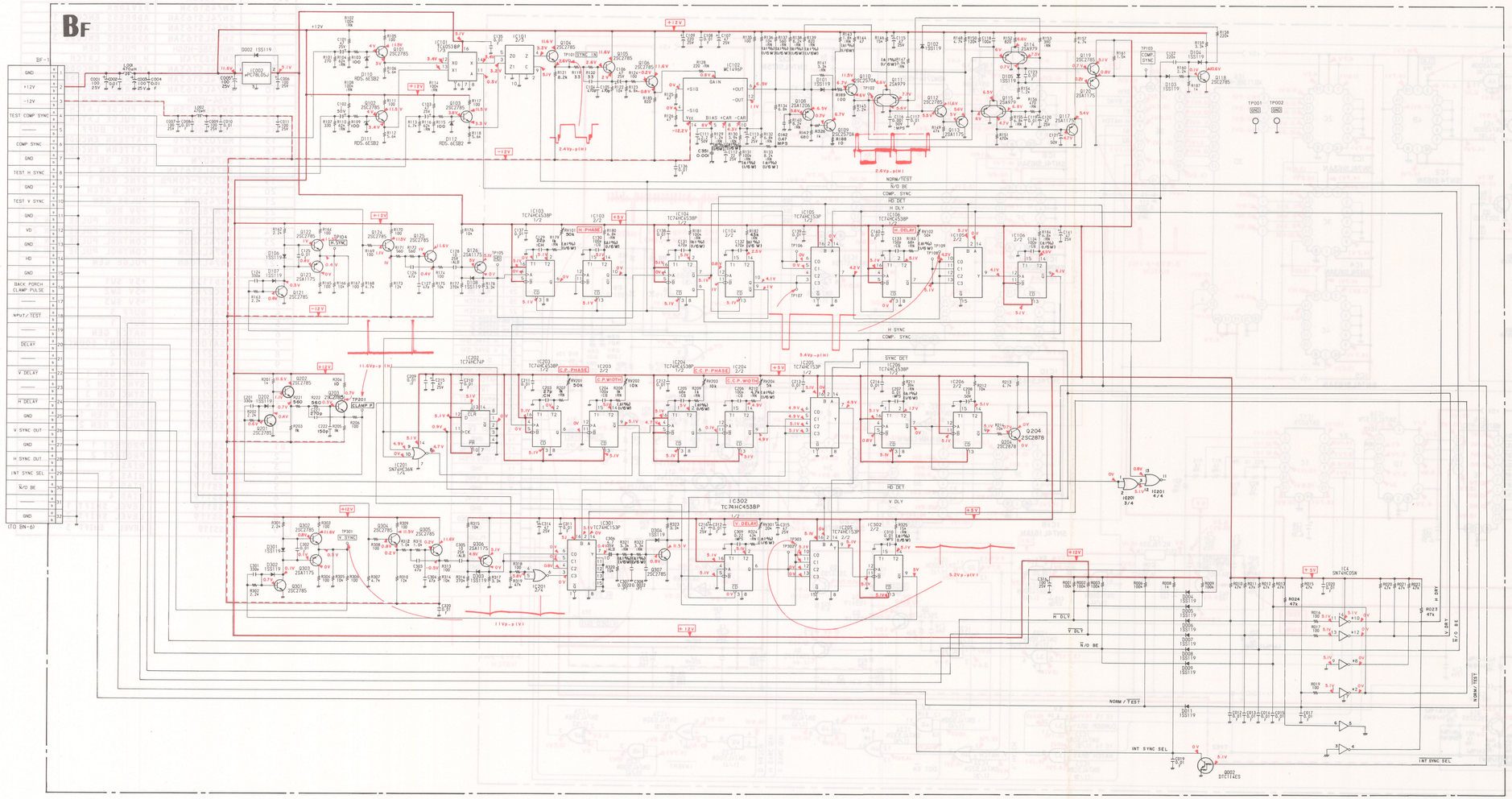

BF board

IC3	LA7016	SYNC SW
4	MC1496P	GAIN CONTROL
5	TC4011UBP	NAND GATE
6	TC4528BP	H SYNC SEP
7	TC4528BP	EQUIVALENT PULSE ELIMINATOR
8	TC4528BP	CLAMP PULSE GENERATOR/H SYNC DETECTOR
9	TC4528BP	H/V SYNC GENERATOR
10	TC4053BP	SYNC SW
11	TC4528BP	H/V SYNC DELAY
12	TC4528BP	VD DETECTOR/CLAMP PULSE GENERATOR
13	TC4053BP	SYNC SW
14	TC4528BP	HD DETECTOR/HD DELAY
Q1	2SA1206	SYNC AMP
2	2SC2570A	SYNC AMP
3	2SC2570A	SYNC AMP
4	2SA979	COMPARATOR
5	2SC2785	BUFF
6	2SA1175	BUFF
7	2SA979	COMPARATOR
9	2SA979	COMPARATOR
10	2SC2785	LIMITTER
11	2SA1175	BUFF
12	2SC2785	BUFF
13	2SK125	CLAMP
14	2SC2785	COMPARATOR
15	2SC2785	COMPARATOR
16	2SA1175	BUFF
17	2SC2785	BUFF
18	2SA1175	BUFF
19	2SC2785	BUFF
20	2SA1175	V SYNC SEP
21	2SC2785	BUFF
22	2SC2785	BUFF
23	2SA1175	BUFF
24	2SC2785	BUFF
25	2SA1175	BUFF
26	2SC2785	BUFF
27	2SA1175	BUFF
28	2SA1175	VD AMP
29	2SA1175	HD AMP
30	2SA1175	
31	2SA1175	POWER ON RESET
D3	RD3.0EB1	
4	1SS119	
5	1SS119	
6	1SS119	
7	1SS119	
9	1SS119	
10	1SS119	
11	1SS119	
12	RD11EB1	
13	1SS119	
14	1SS119	
15	1SS119	
16	1SS119	
17	1SS119	
18	1SS119	
19	1SS119	
20	1SS119	
21	1SS119	
22	1SS119	
23	1SS119	
24	1SS119	
25	1SS119	
26	1SS119	
27	1SS119	
28	1SS119	
29	1SS119	
30	1SS119	

BF board (SYNC PROCESSOR)

IC	002 101 102 103 104 105 106 201 202 203 204 205 206 301 302
Q	101 102 103 104,102,103 105 106 107 108 109 110 111 112 113 114 115 117 118 119 120 121 122 123 124,125,126 202 203 204 205 206 301 302 303 304 305 306 307
D	002 101 102 103 104 105 106 107 108 110 111 112 202 301 302 303 304 005 006 007 008,009 011
ADJ TP	TP001 TP002 TP101 TP102 TP103 TP104 TP105 TP106 TP107 TP108 TP109 TP201 TP301 TP302 TP303 RV101 RV102 RV201 RV202 RV203 RV204 RV301

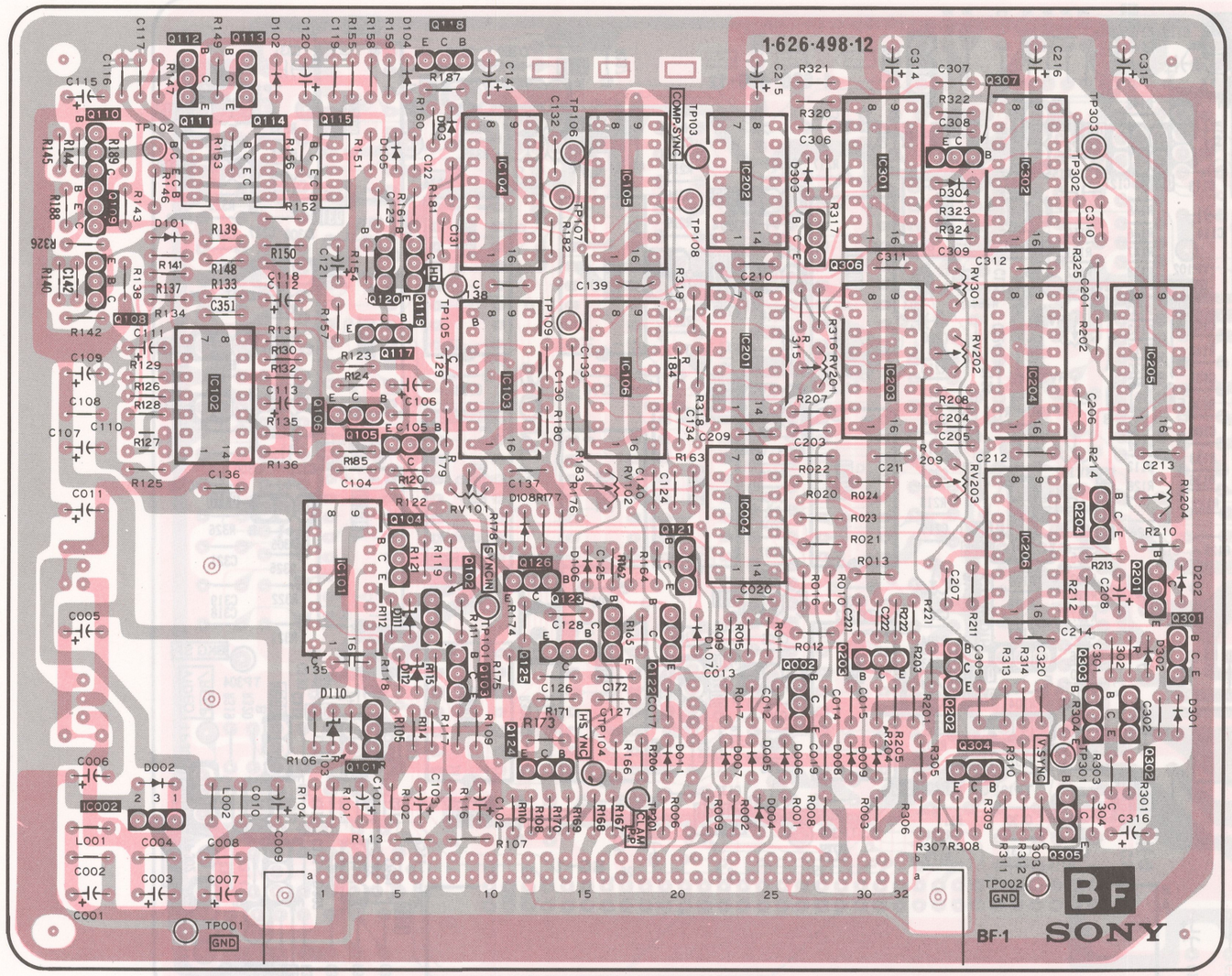

• : Conductor side pattern
• : Component side pattern

BG board (PULSE GENERATOR)

| | | |

BG BG

BG board (PULSE GENERATOR)

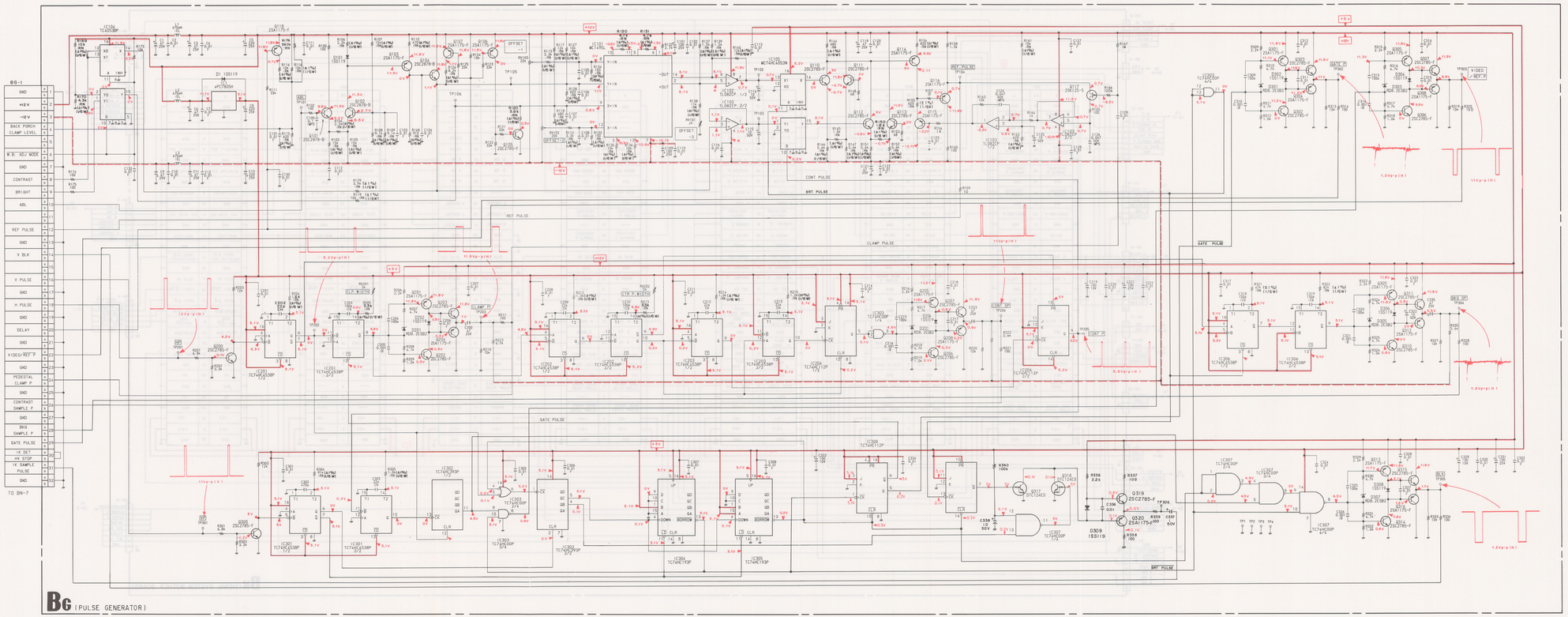

BN board (SIGNAL SYSTEM MOTHER BOARD)

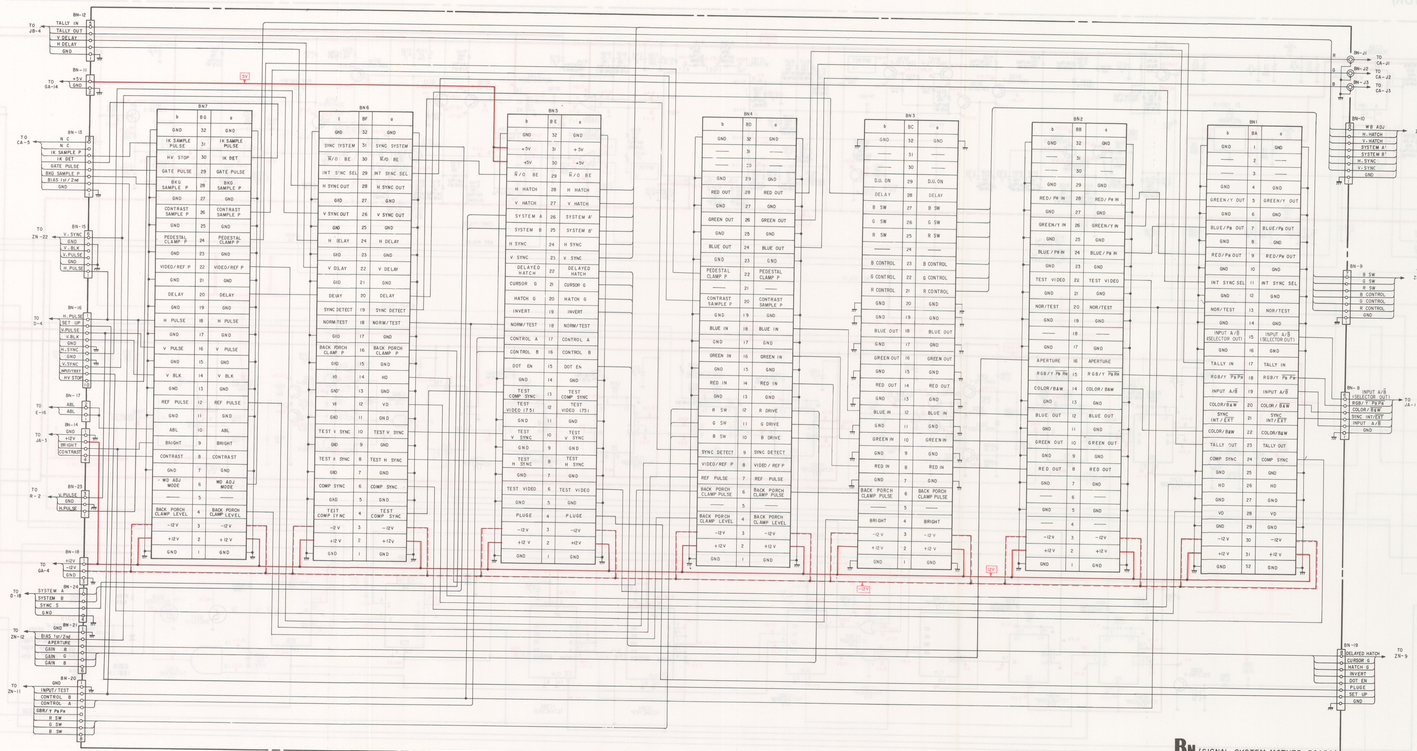

BN board (SIGNAL SYSTEM MOTHER BOARD)

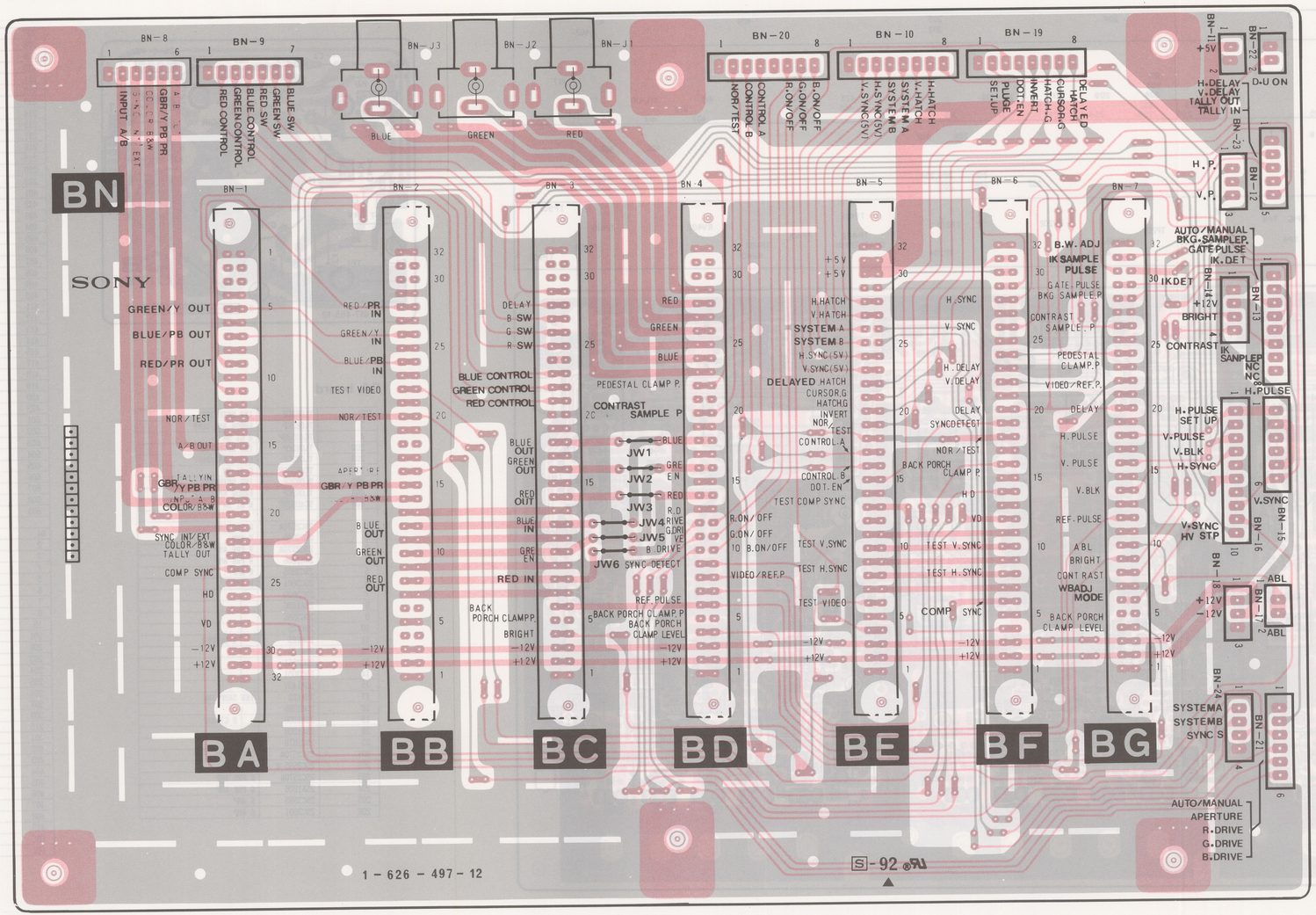

• : Conductor side pattern
• : Component side pattern

CA board (VIDEO OUTPUT)

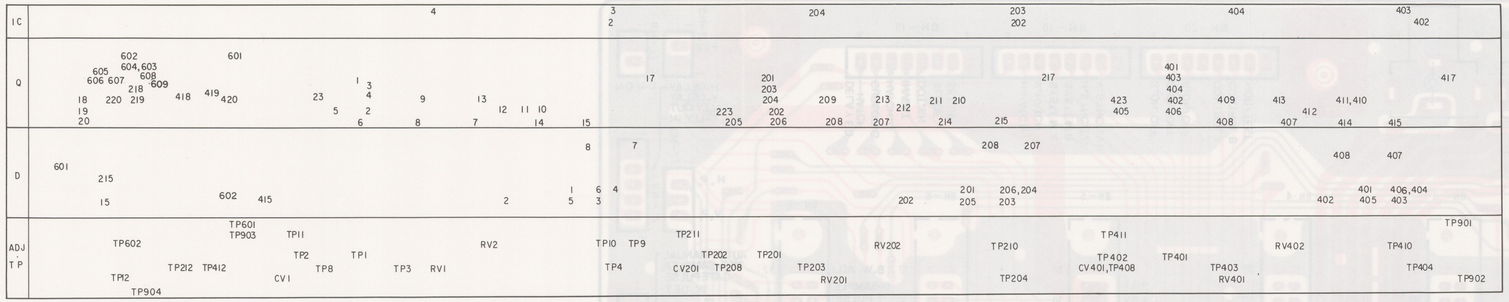

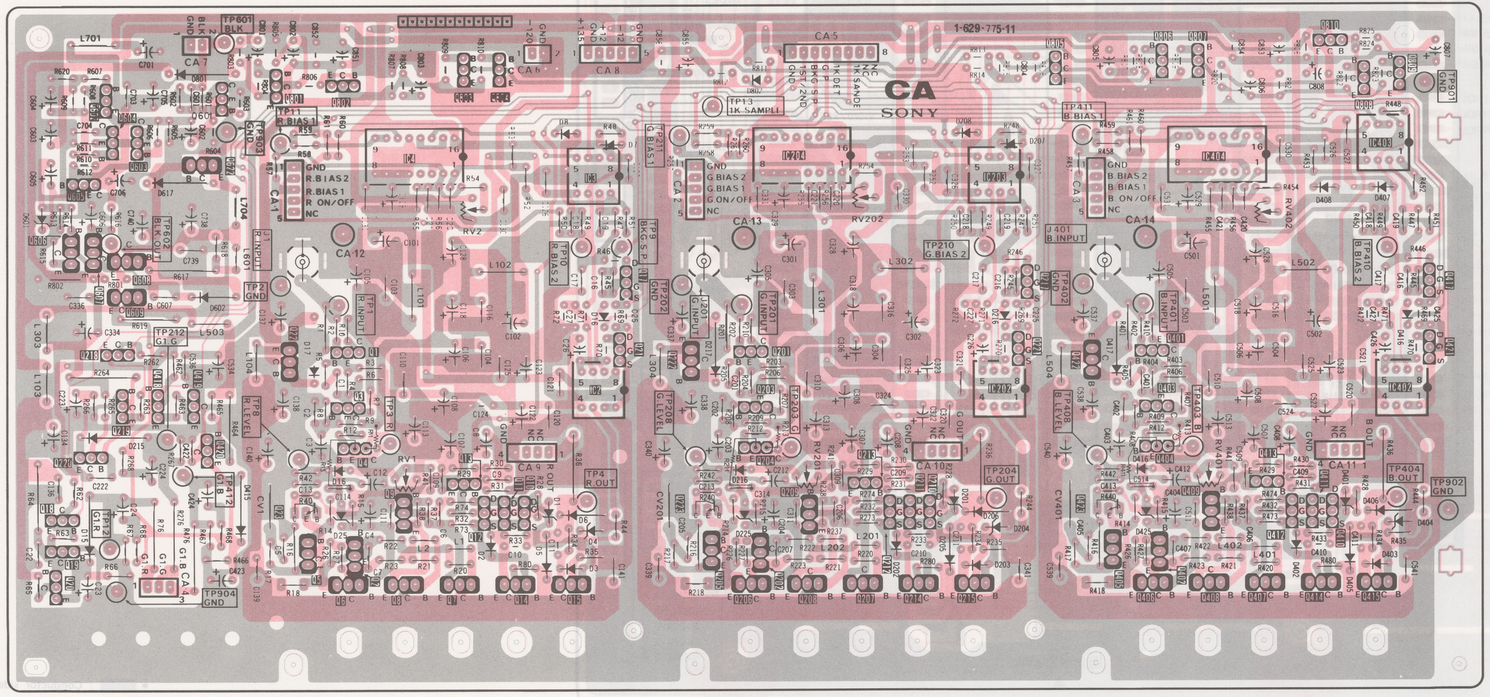

CB board (PICTURE TUBE SOCKET)

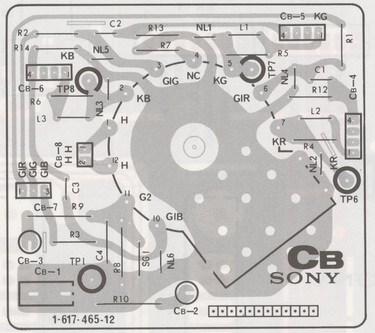

CA board

IC2	TL082CP	IKR DETECTOR
3	TL082CP	ERROR AMP/BUFF
4	TC40S38P	R G1 SW
202	TL082CP	IKG DETECTOR
203	TL082CP	ERROR AMP/BUFF
204	TC40S38P	G G1 SW
402	TL082CP	IKB DETECTOR
403	TL082CP	ERROR AMP/BUFF
404	TC40S38P	B G1 SW
Q1	2SC2570A	R PRE AMP
2	2SC3595	R AMP
3	2SC2570A	R PRE AMP
4	2SA1206	R PRE AMP
5	2SC3595	R AMP
6	2SC3601	R AMP
7	2SC3600	} R BUFFER
8	2SA1406	
9	2SC3595	
10	2SK125	
11	2SK125	
12	2SK125	
13	2SC2551	
14	2SC3601	
15	2SA1407	
17	2SK125	IKR SAMPLING
18	2SC2785	} R G1 AMP
19	2SA1208	
20	2SA1208	
23	2SC2878	
201	2SC2570A	G PRE AMP
202	2SC3595-D	G AMP
203	2SC2570A	G PRE AMP
204	2SA1206	G PRE AMP
205	2SC3595	G AMP
206	2SC3601	G AMP
207	2SC3600	} G BUFFER
208	2SA1406	
209	2SC3595	
210	2SK125	
211	2SK125	
212	2SK125	
213	2SC2551	
214	2SC3601	
215	2SA1407	
217	2SK125	IKG SAMPLING
218	2SC2785	} G G1 AMP
219	2SA1208	
220	2SA1208	
223	2SC2878	
401	2SC2570A	B PRE AMP
402	2SC3595	B AMP
403	2SC2570A	B PRE AMP
404	2SA1206	B PRE AMP
405	2SC3595	B AMP
406	2SC3601	B AMP
407	2SC3600	} B BUFFER
408	2SA1406	
409	2SC3595	
410	2SK125	
411	2SK125	
412	2SK125	
413	2SC2551	
414	2SC3601	
415	2SA1407	
417	2SK125	IKB SAMPLING
418	2SC2785	} B G1 AMP
419	2SA1208	
420	2SA1208	
423	2SC2878	
601	2SC2570A	} BLK PULSE AMP
602	2SC2878	
603	2SC2570A	
604	2SC2570A	
605	2SC2570A	
606	2SC3595	
607	2SC3601	
608	2SC3601	
609	2SA1407	
D1	RD9.1ESB1	
2	1SS119TD	
3	1SS119TD	
4	RD11ESB2	
5	1SS83	
6	1SS83	
7	1SS119TD	
8	1SS119TD	
15	V19G	CLAMP
201	RD9.1ESB1	
202	1SS119TD	
203	1SS119TD	
204	RD11ESB2	
205	1SS83	
206	1SS83	
207	1SS119TD	
208	1SS119TD	
215	V19G	CLAMP
401	RD9.1ESB1	
402	1SS119TD	
403	1SS119TD	
404	RD11ESB2	
405	1SS83	
406	1SS83	
407	1SS119TD	
408	1SS119TD	
415	V19G	CLAMP
601	RD6.8ESB1	
602	1SS119	

• : Conductor side pattern
• : Component side pattern

CA board (VIDEO OUTPUT) CB board (PICTURE TUBE SOCKET)

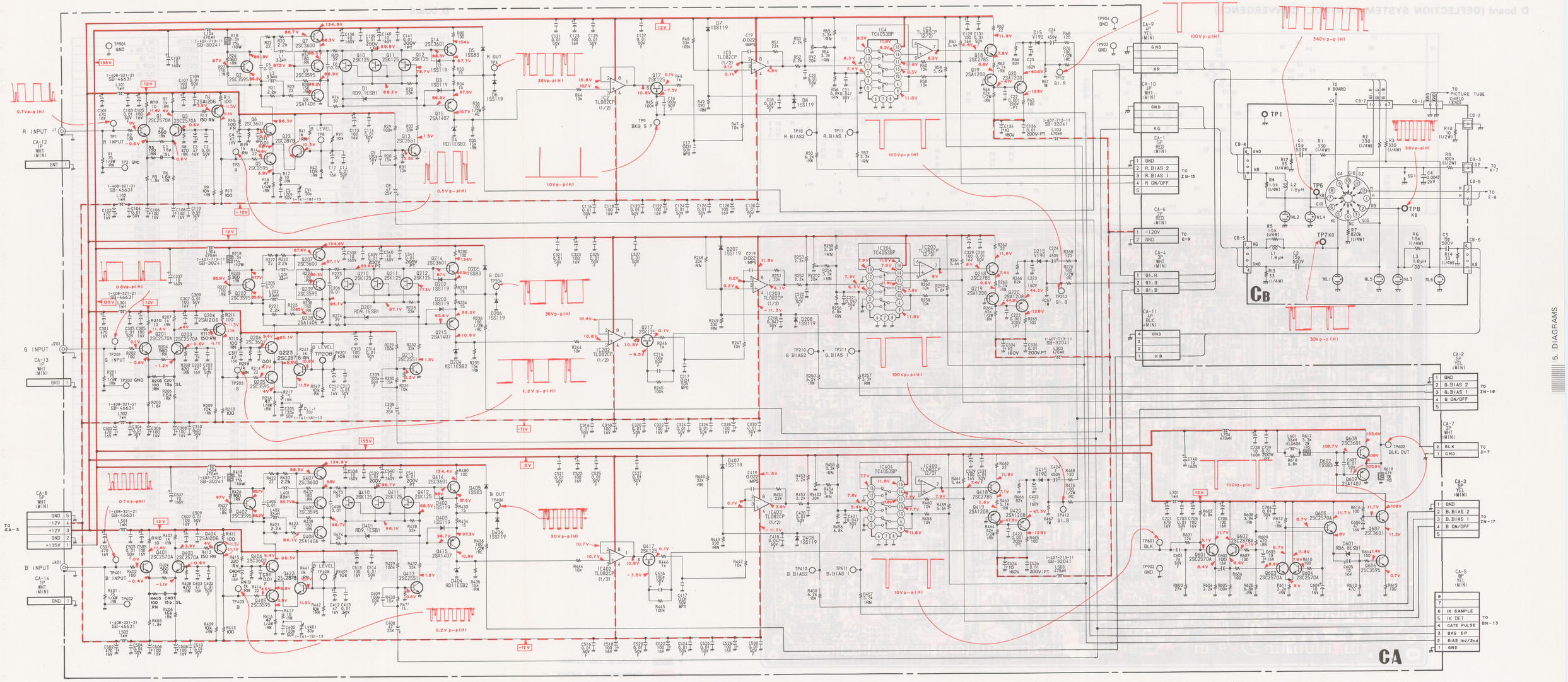

D board (DEFLECTION SYSTEM CONTROL, CONVERGENCE)

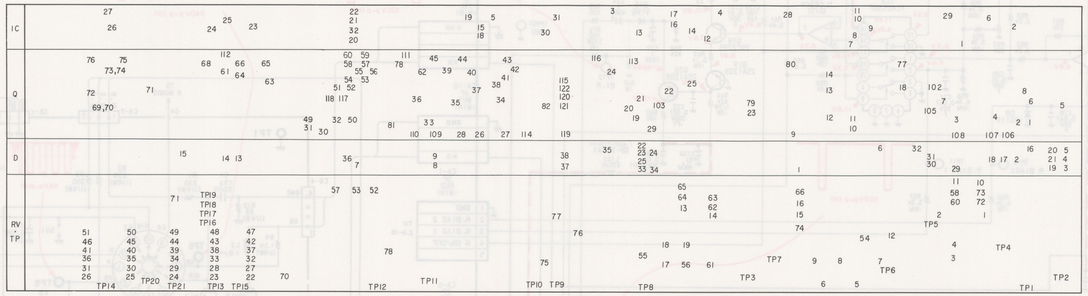

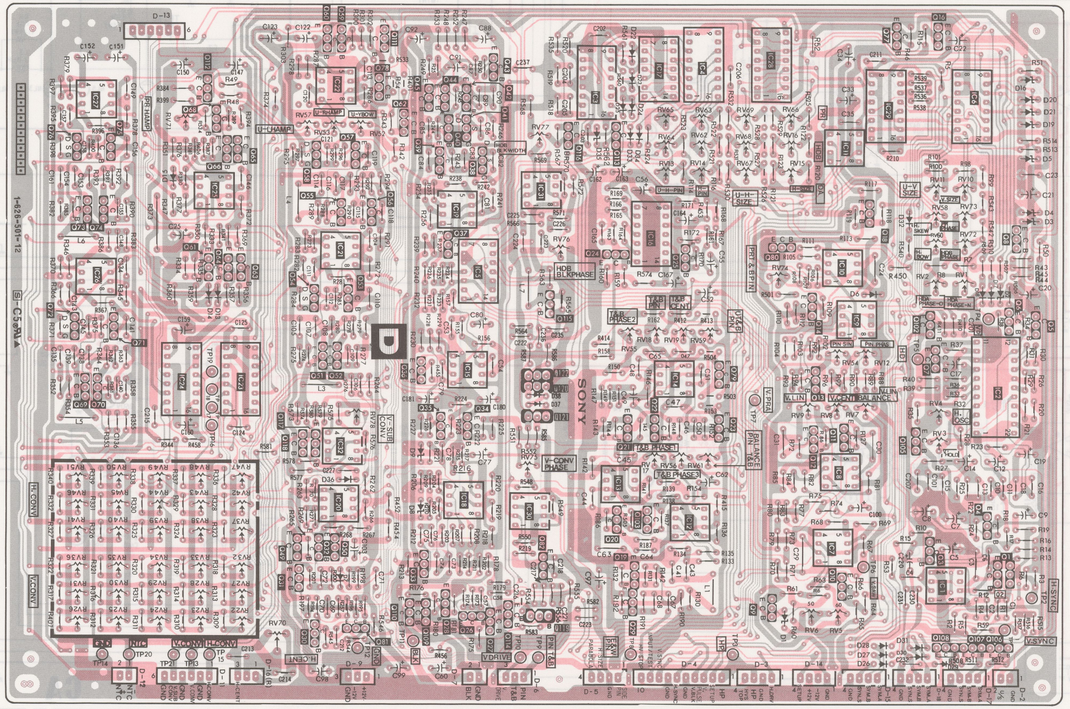

• : Conductor side pattern
• : Component side pattern

D board

IC1	uPC311C	COMP 1
2	uPC1377C	H,V OSC
3	TC74HC138P	PIN SELECT
4	M54519P	BUFF
5	TC4066BP	FV SW
6	TC4053BP	U/S SW
7	uPC4558C	V SAW
8	uPC4558C	H SIN
9	uPC4558C	V DRIVE
10	uPC4558C	H PIN
11	uPC4558C	H SIZE
12	uPC311C	COMP 2
13	uPC311C	COMP 3
14	TL082CP	T & B (H)
15	uPC4558C	T & B AMP
16	MC1496P	T & B PIN MODU
17	TC74HC04P	INV
18	NJM2903D	V COMP
19	uPC4558C	2V SAW
20	uPC4558C	V CONV 1
21	uPC4558C	V CONV 2
22	uPC4558C	V CONV 3
23	TC4053BP	SW 1
24	TC4053BP	SW 2
25	uPC4558C	NTC
26	uPC4558C	H CONV 1
27	uPC4558C	H CONV 2
28	M884051B	SIZE SW
29	M884051B	PHASE SW
30	uPC311C	COMP 4
31	uPC311C	COMP 5
32	TL082CP	AMP
Q1	2SC2785	H SYNC
2	2SC2785	H PHASE 1
3	2SC2785	H PHASE 2
4	2SC2785	REG
5	DTC124ES	FV SW
6	2SC2785	BUFF 1
7	2SA1175	BUFF 1
8	DTC124ES	
9	DTC124ES	FV SW
10	2SC2878	SW 1
11	2SC2878	SW 2
12	2SC2878	SW 3
13	2SC2878	SW 4
14	2SC2878	SW 5
16	DTC124ES	U/S SW
18	2SC2878	SW 6
19	2SC2785	HD
20	2SC2785	TB SAW
21	2SC2785	TB DRIVE
22	2SC2878	SW 7
23	2SC2878	SW 8
24	2SC2878	SW 9
25	2SC2785	TB BUFF
26	2SC2785	H MBLK DRIVE
27	2SC2785	H BLK 1
28	2SC2785	V BLK
29	2SC2785	H PULSE
30	2SC2785	H BLK 2
31	2SC2785	H BLK 3
32	2SC2785	CONV DRIVE 1
33	2SC2785	CLAMP P
34	2SC2785	CONV DRIVE 2
35	DTC124ES	FV SW
36	2SC2785	SW 1

37	2SC2785	SW 2
38	2SK523	CLP SW 4
39	DTC124ES	FV SW
40	2SC2785	BUFF 2
41	2SK523	CLP SW 4
42	DTC124ES	FV SW
43	2SC2785	BUFF 3
44	2SC2878	BUFF 1
45	2SC2878	CLAMP 1
49	2SC2878	CLAMP 2
50	2SC2878	BUFF 2
51	2SC2878	SW 10
52	2SC2785	AMP 1
53	2SC2785	BUFF 4
54	2SK523	CLP SW 1
55	2SC2878	SW 11
56	2SC2785	AMP 2
57	2SC2785	BUFF 5
58	2SK523	CLP SW 2
59	2SC2785	BUFF 6
60	2SA1175	BUFF 2
61	2SC2878	SW 12
62	2SC2878	U/C SW
63	2SC2785	NTC OUT
64	2SA1175	NTC OUT
65	2SC2785	BUFF 7
66	2SC2785	BUFF 8
68	2SC2785	BUFF 9
69	2SC2878	SW 13
70	2SC2785	AMP 3
71	2SC2785	BUFF 10
72	2SK523	CLP SW 3
73	2SC2878	SW 14
74	2SC2785	AMP 4
75	2SC2785	BUFF 11
76	2SK523	CLP SW 4
77	DTC124ES	
78	DTC124ES	U/S SW
79	2SC2878	U/S SW
80	2SC2878	PROG SW
81	2SC2785	BUFF 12
82	2SC2785	BUFF 13
102	DTC124ES	
103	DTC124ES	
105	DTC124ES	
106	DTC124ES	
107	DTC124ES	
108	DTC124ES	
109	2SC2785	AMP 5
110	2SA1175	AMP 1
111	DTC124ES	PROG SW
112	DTC124ES	PROG SW
113	DTC124ES	
114	2SC2785	COMPOSITE BLANKING
115	2SC2785	HDB BLANKING
116	DTC124ES	HDB SW
117	2SC2785	AMP
118	2SC2785	AMP
119	2SC2785	
120	2SA1175	
121	2SC2785	
122	2SA1175	

D board (DEFLECTION SYSTEM CONTROL, CONVERGENCE)

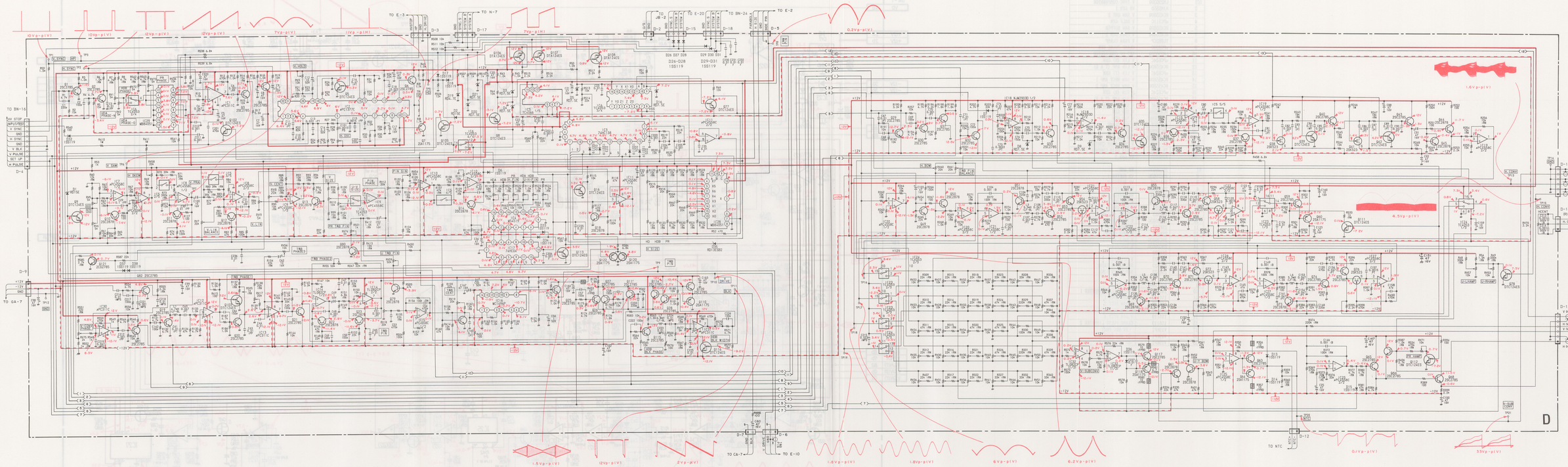

DA board

IC1	LM2903N	V SYNC COMPARATOR
2	NJM555D	VD GEN 1
3	RC4558NV	V SAW GNR 2
4	uPC311C	V BALF GEN
5	RC4558NV	V SAW BUFFER
7	RC4558NV	V PARA GEN 2
8	TL082CP	V PARA CLAMP
9	uPC339C	CLAMP PULSE GEN
10	LM2903N	SET UP COMPARATOR
11	uPC324C	V LIN (B) GEN
12	RC4558NV	V LIN AMP (T & B)
13	uPC324C	V LIN (T) GEN
14	RC4558NV	V SAW RECT AMP 1
15	RC4558NV	V SAW RECT AMP 2
16	uPC324C	V SIN (B) GEN
17	RC4558NV	V SIN AMP (T & B)
18	uPC324C	V SIN (T) GEN
19	RC4558NV	V SIN GEN
20	RC4558NV	V SIN GEN
21	TL082CP	V SIN CLAMP
22	uPC78M08H	+8V REG
23	NJM79M08A	-8V REG
24	TX-425M	V PARA GAIN CONTROL
25	TX-426M	V SIN GAIN CONTROL
27	NJM555D	VD GEN 2
Q1	2SC2603G	VD AMP
2	2SC2603G	VD BUFFER 1
3	2SA1048	VD BUFFER 2
4	2SC2603G	VD BUFFER 3
5	2SA1048	VD BUFFER 4
6	2SC2603G	V SAW GEN 1
7	2SK523	V SAW GEN 2
8	2SK523	SET UP (V SAW)
10	2SC2603G	V PARA GEN 1
11	2SK523	V PARA GAIN
12	2SK523	V PARA CLAMP
13	2SC2603G	V BALF SW
14	2SC2603G	V SIN GEN 1
15	2SK523	V SIN CLAMP
16	2SK523	V SIN GAIN
21	2SK523	SET UP (V PARA)
22	2SK523	SET UP (V SIN)
D1	RGS, 1EN1	VD CLIP
10	1SS119	CLAMP PULSE LIMMETER 1
11	1SS119	V SAW RECT 1
12	1SS119	V SAW RECT 2
13	1SS119	V SAW RECT 3
14	1SS119	V SAW RECT 4
15	1SS119	CLAMP PULSE LIMMETER 2
17	V19EF1	+8V REG PROT
18	V19EF1	-8V REG PROT 1
25	V19EF1	-8V REG PROT 2

DA board (V. GENERATOR)

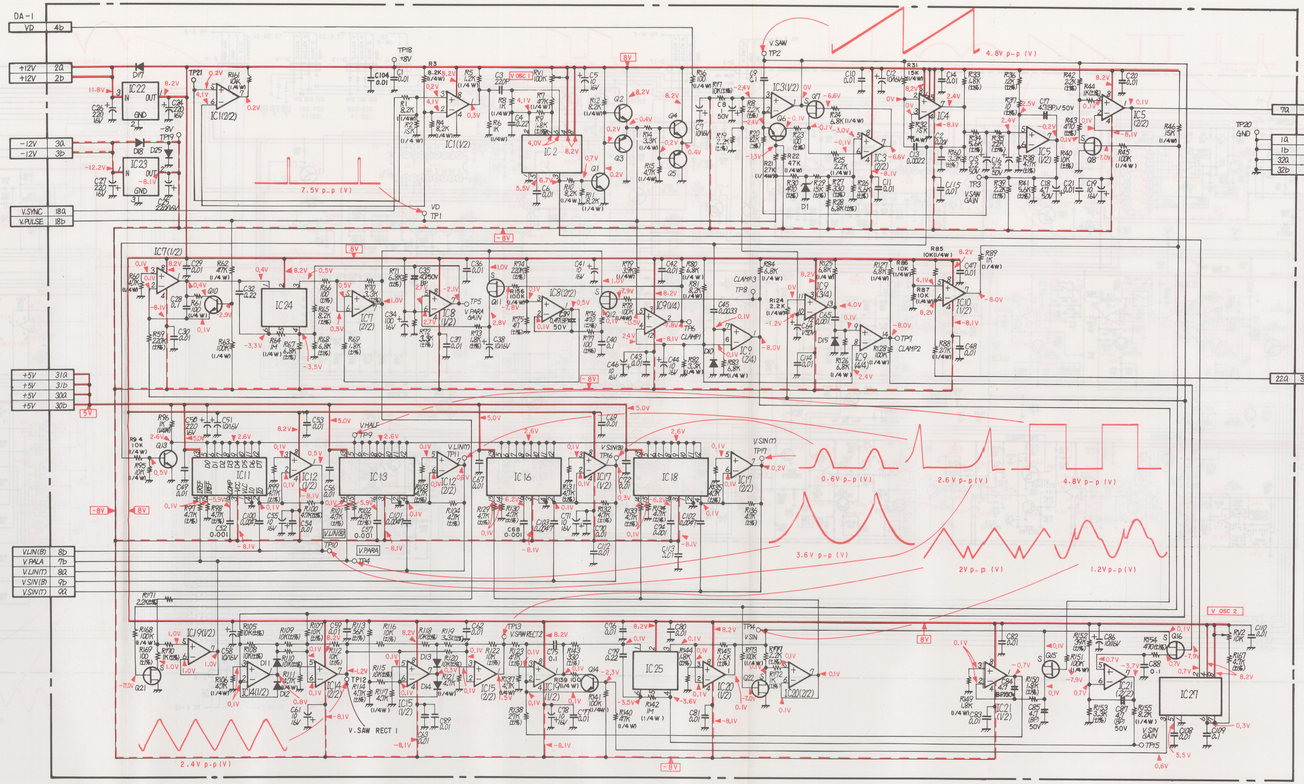

DA board (V. GENERATOR)

IC	10 5 4 21 18 13 16 11 17 12 19 20 9 14 15 25 8 3 24 7 27 22 23 1 2
Q	8 13 22 21 15 16 14 11 12 7 6 10 5 4 2 3 1
D	15 10 11 12 1 13 14 18 17 25
ADJ・TP	TP11 TP17 TP3 TP4 TP7 TP16 TP10 TP12 TP13 TP14 TP8 TP6 TP15 TP5 TP2 TP19 TP1 TP21 RV2 RV1 TP18 TP20

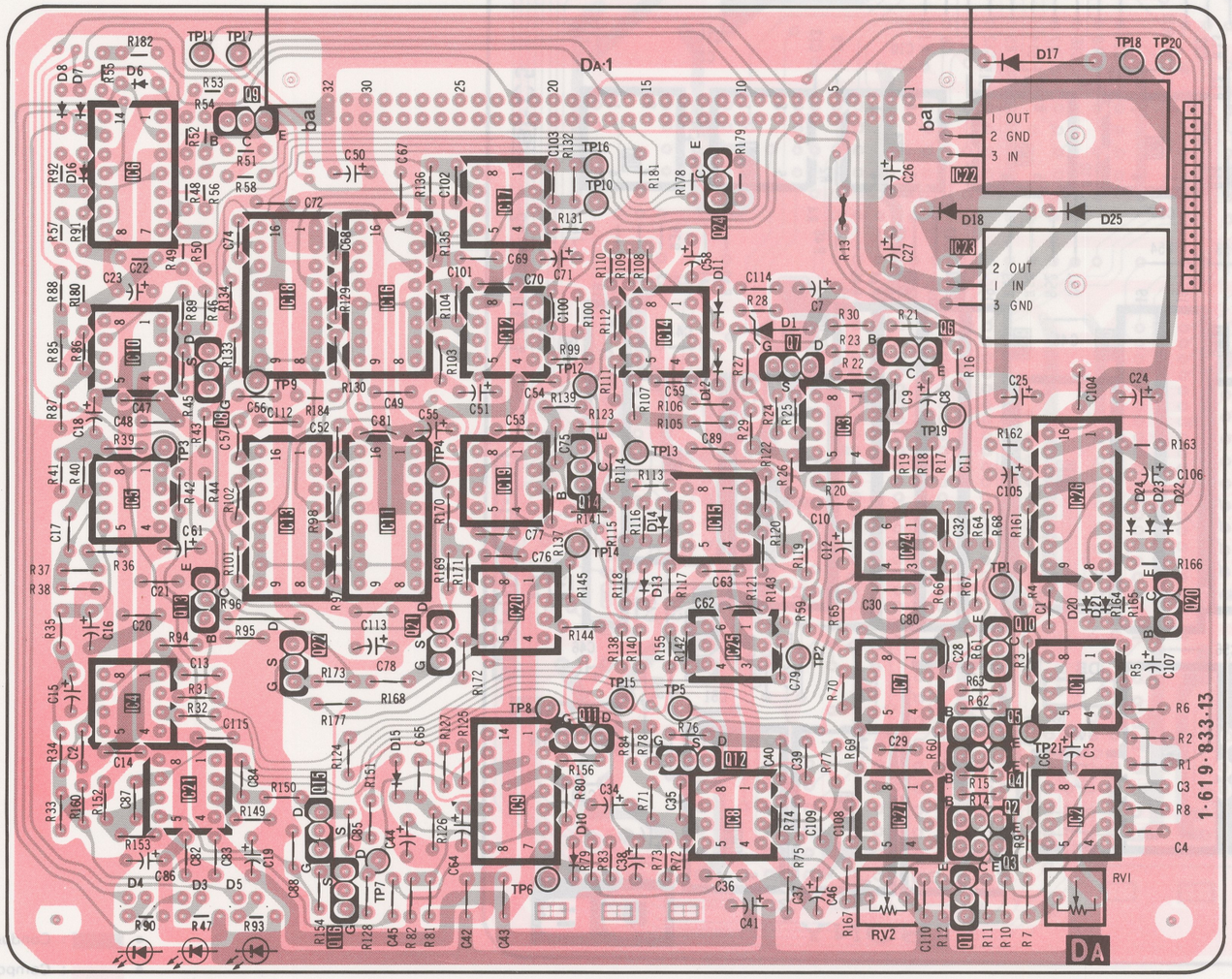

● : Conductor side pattern

● : Component side pattern

DB board (H. GENERATOR)

IC	2 31	10 32	11	28	9 29	8 30	25	7 21	20	19	18	17	16	14	3	1 33
								24			34		23		22	
Q																7
D	2															1
																5

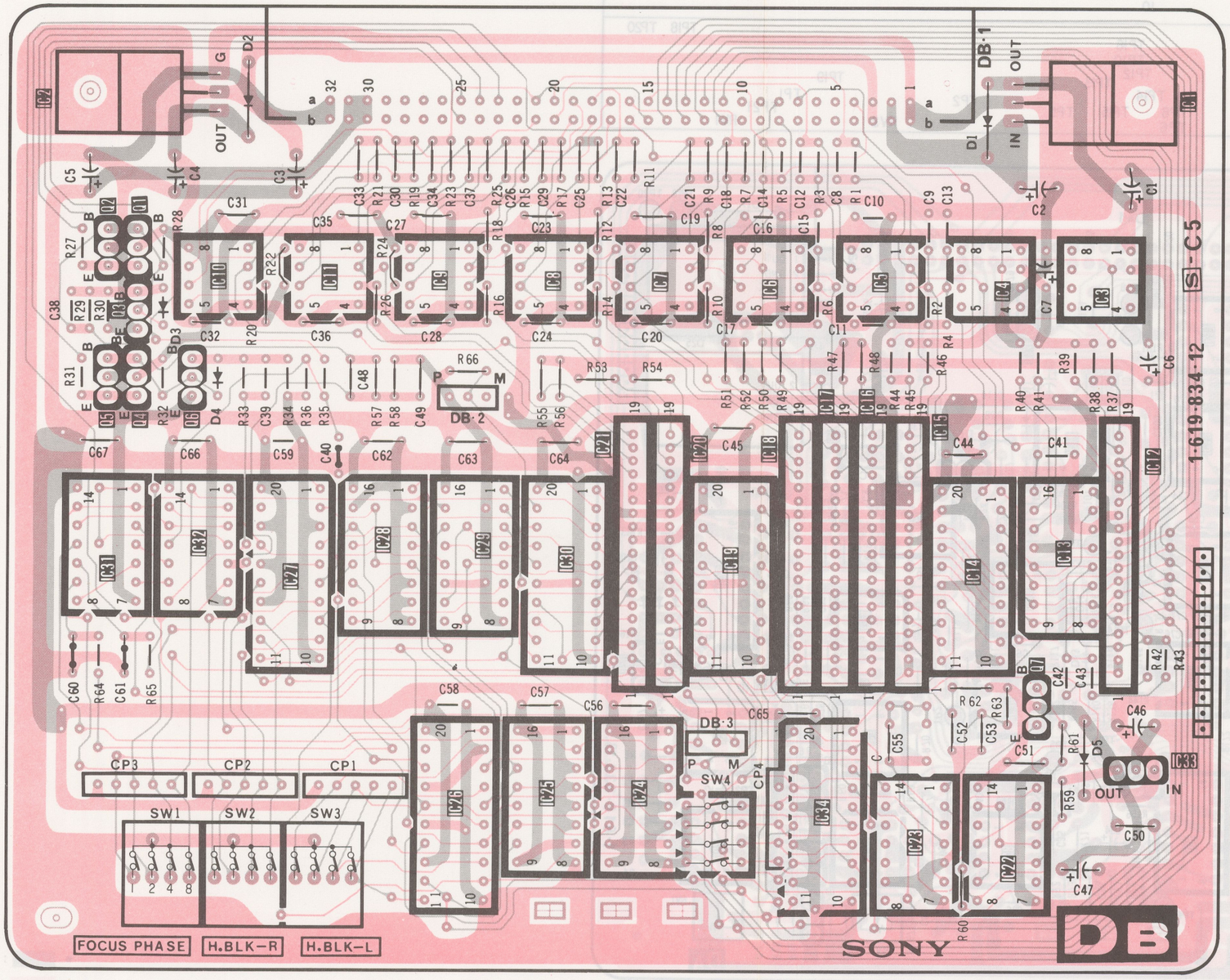

• : Conductor side pattern
• : Component side pattern

DB board (H. GENERATOR)

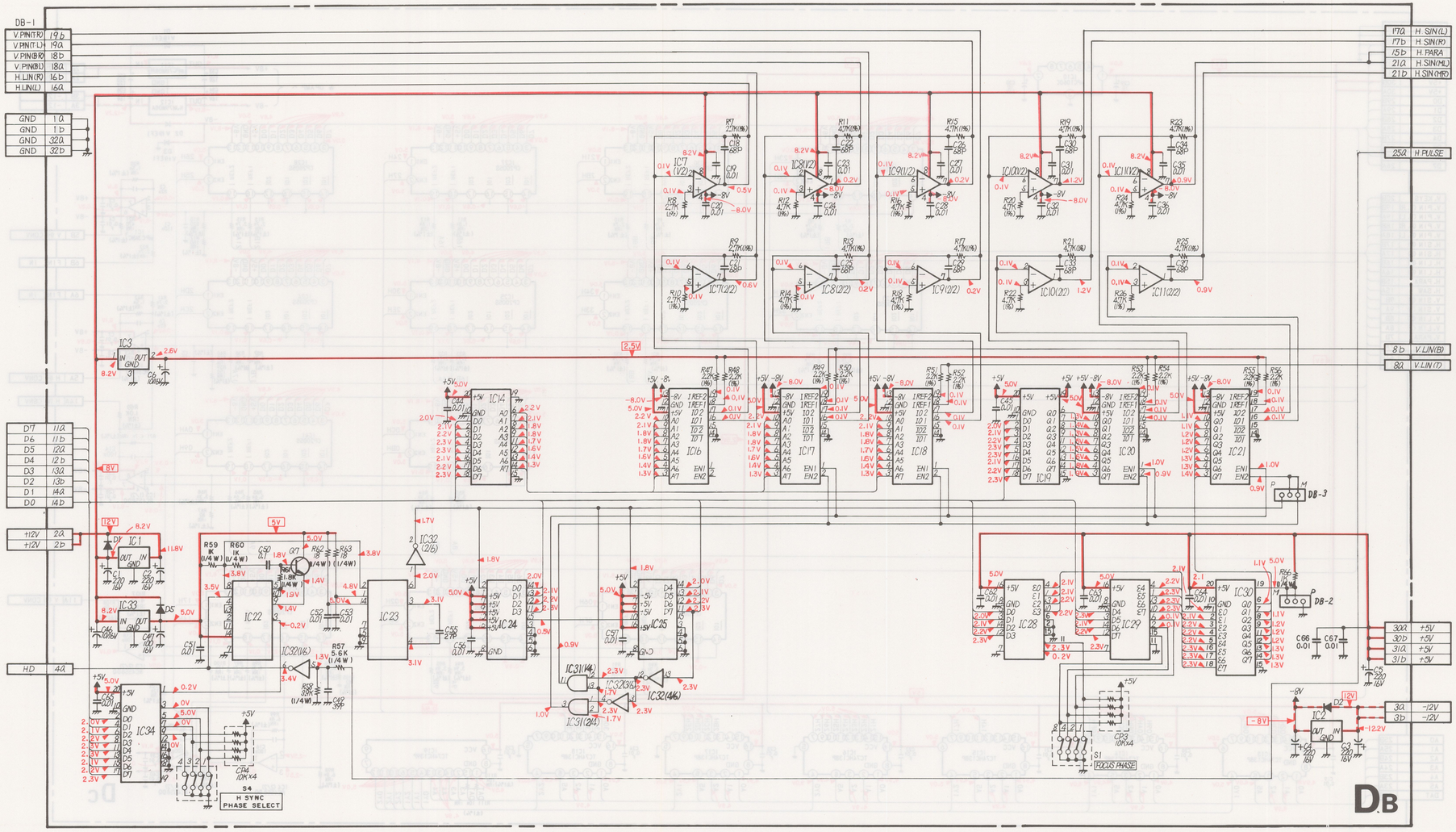

DB board

IC1	NJM78M08H	+8V REG
2	NJM79M08A	-8V REG
3	uPC1060C	+2.5V REG
7	TL082CP	H LIN (R & L) AMP
8	TL082CP	V PIN (B.L & B.R) AMP
9	TL082CP	V PIN (T.L & T.R) AMP
10	TL082CP	H SIN (R & L) AMP
11	TL082CP	H LIN (MR & ML) AMP
14	TBP28L42N	H PARA 1
16	CP2005S	V LIN (R & L) GEN
17	CP2005S	V PIN (B.L & B.R) GEN
18	CP2005S	V PIN (T.L & T.R) GEN
19	TBP28L42N	H SIN 1
20	CP2005S	H SIN (R & L) GEN
21	CP2005S	H SIN (MR & ML) GEN
22	MC4044P	PLL 1
23	MC4024P	PLL 2
24	SN74163N	H COUNTER 1
25	SN47163N	H COUNTER 2
28	SN74LS283N	H FOCUS PHASE 1
29	SN74LS283N	H FOCUS PHASE 2
30	TBP28L42N	H SIN 2
31	SN74LS08N	NAND
32	SN74LS04N	INV
33	uPC78L05	+5V REG
34	SN74LS682N	
Q7	2SC2603G	PLL BUFFER
D1	V19EF1	+8V REG PROT
2	V19EF1	-8V REG PROT
5	V19EF1	+5V REG PROT

DC board

IC1	uPC318C	V (H) CONV AMP
2	uPC318C	H (H) CONV AMP
3	RC4558DQ	H(V) CONV/V(V) CONV AMP
4	RC4558DQ	H.STAT/V.STAT AMP
10	uPC1060C	+2.5V REG
11	uPC78M08H	+8V REG
12	NJM79M08A	-8V REG
13	TC74HC138P	ADD DECODER (1)
14	TC74HC138P	ADD DECODER (2)
15	TC74HC138P	ADD DECODER (3)
16	TC74HC138P	ADD DECODER (4)
17	TC74HC138P	ADD DECODER (5)
18	TC74HC138P	ADD DECODER (6)
19	TC74HC139P	ADD DECODER (7)
22	CP2005S	H CONV (B-S)
23	CP2005S	H CONV (T-S)
24	CP2005S	H CONV (M)
25	CP2005S	H CONV (S)
27	CP2005S	CONV (S)
28	CP2005S	CONV (-M)
29	CP2005S	CONV (T-S)
30	CP2005S	CONV (B-S)
32	CP2005S	CONV (T & B)
34	CP2005S	CONV (M)
35	CP2005S	H/V STAT
41	CP2005S	CONV (C.M)
42	CP2005S	CONV (T & B)
D1	V19EF1	+8V REG PROT
2	V19EF1	-8V REG PROT 1
3	V19EF1	-8V REG PROT 2

DC board (DIGITAL GAIN CONTROL)

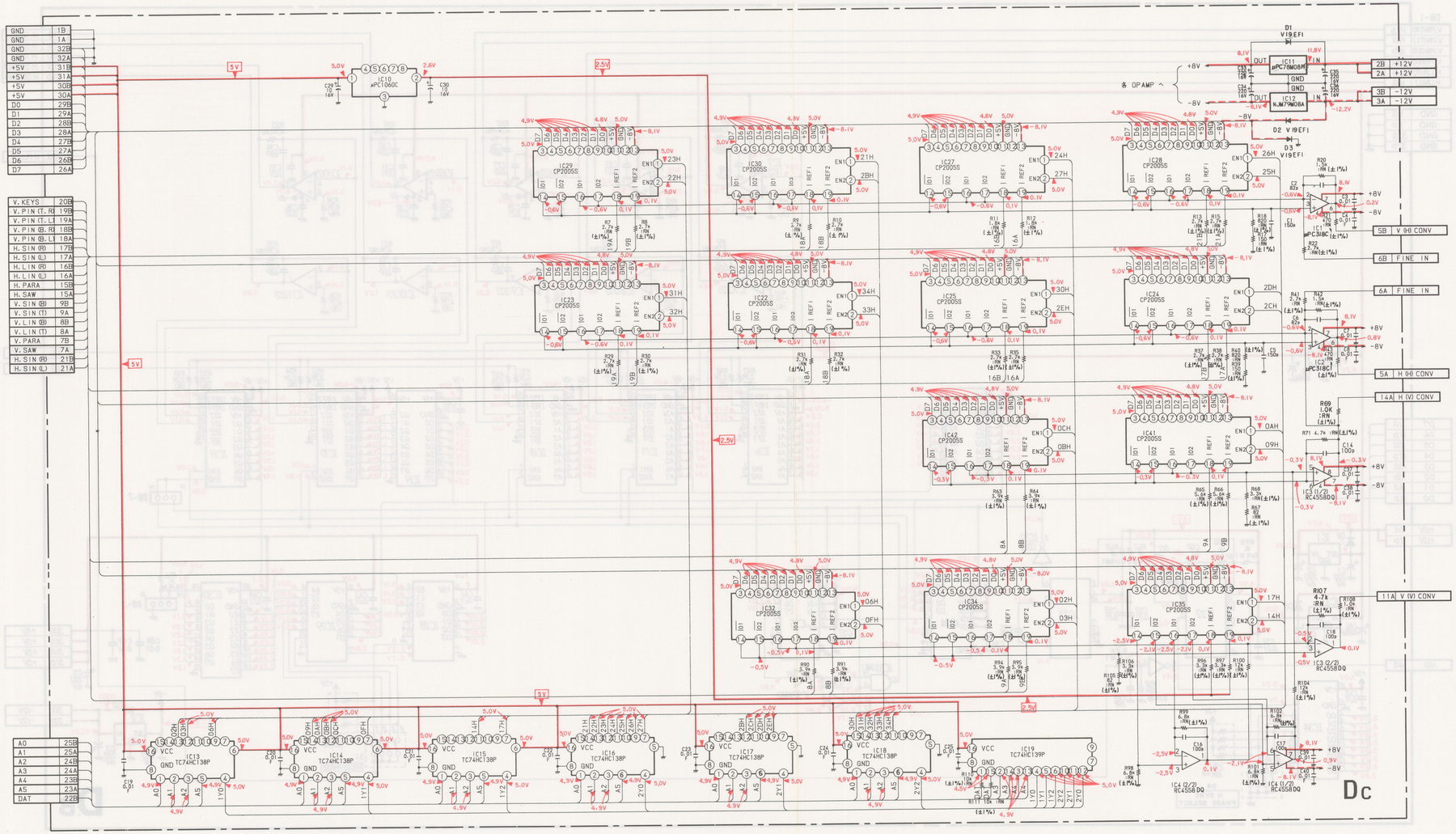

DC board (DIGITAL GAIN CONTROL)

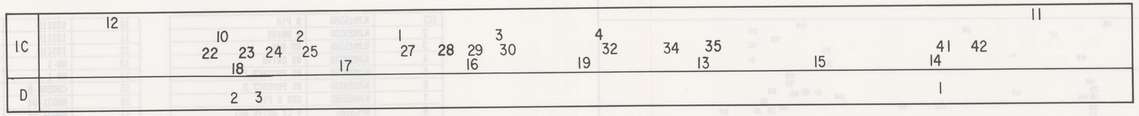

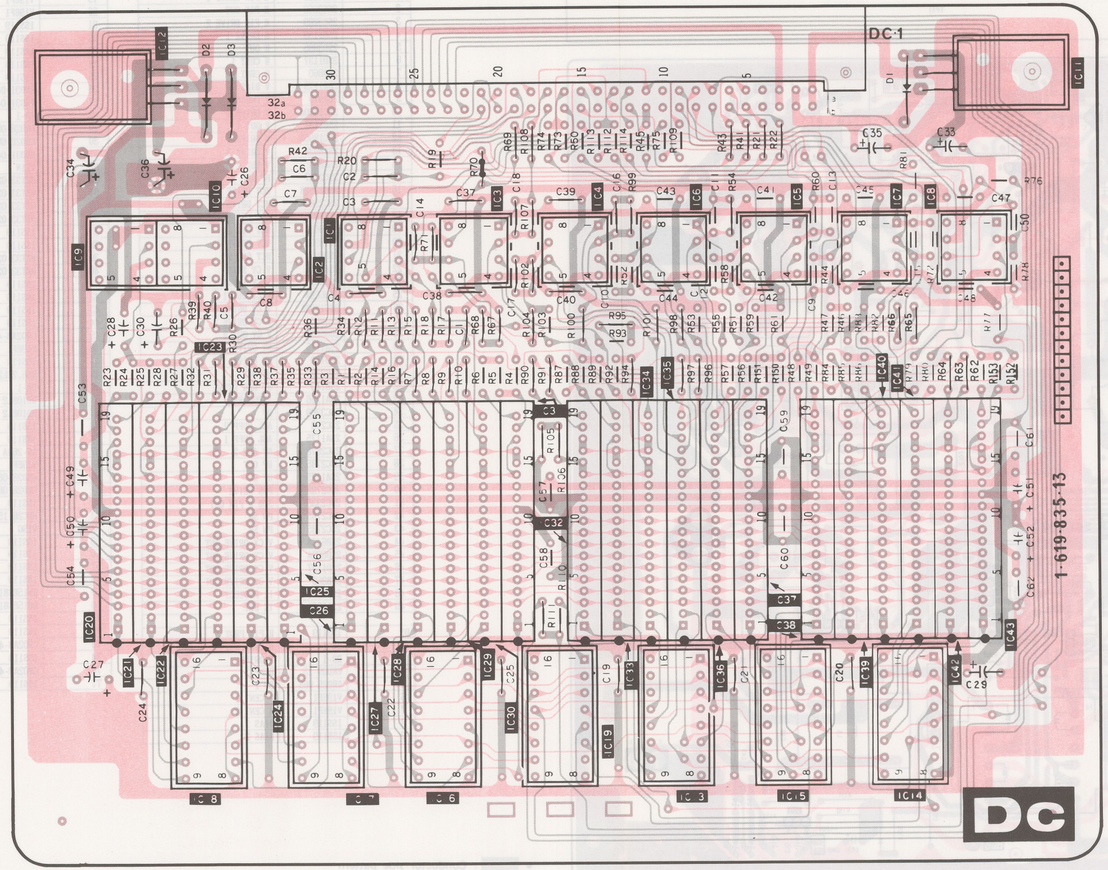

: Conductor side pattern
: Component side pattern

E, K, P

K board (DYNAMIC FOCUS, CONNECTOR RELAY)

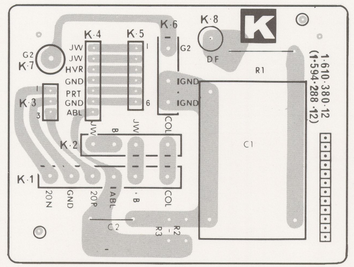

P board (EHT TRANSFORMER)

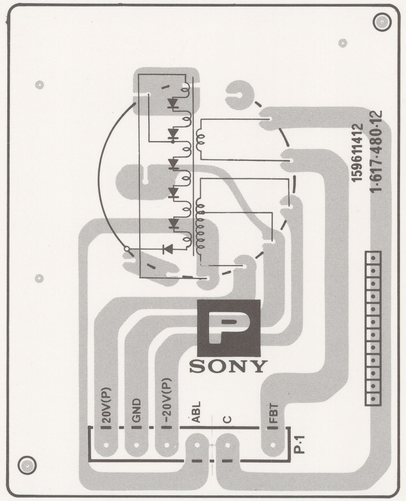

E board (H/V DEFLECTION OUTPUT, DYNAMIC FOCUS, ENT REG)

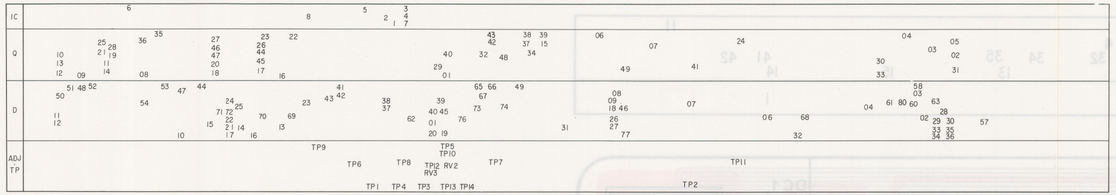

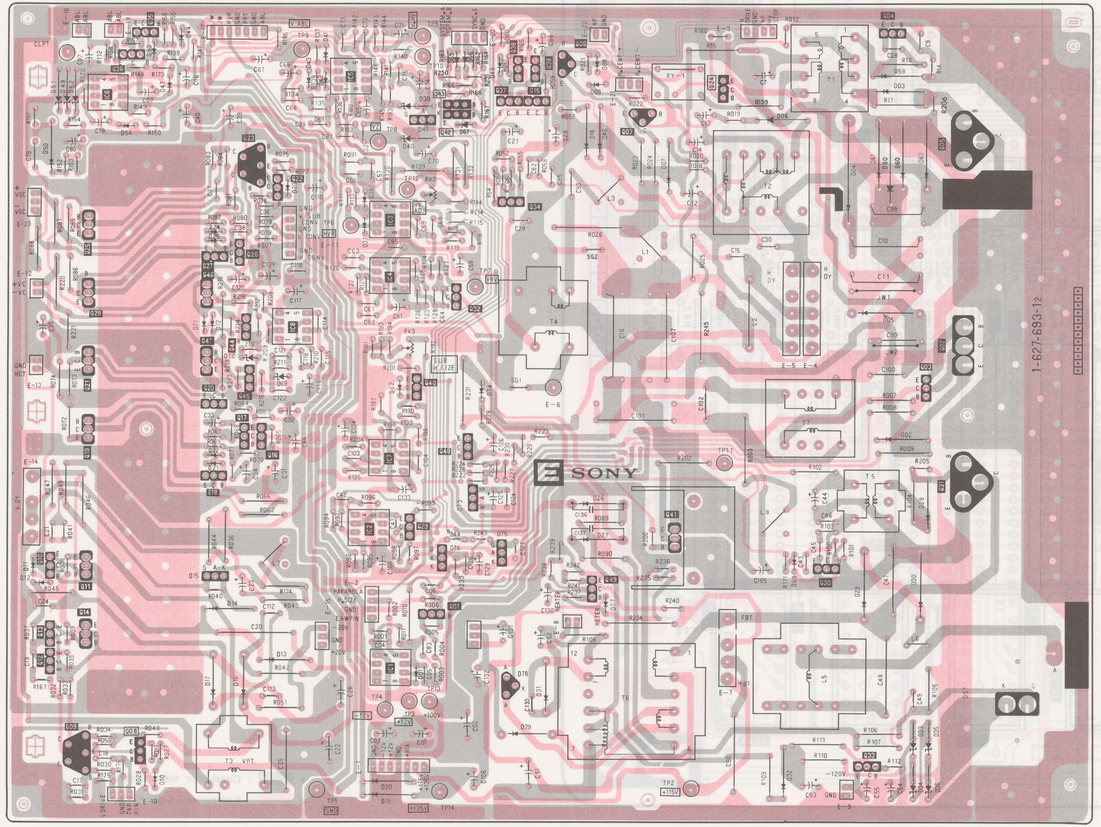

E board

IC1	NJM4558D	H PIN
2	NJM2903D	H DRIVE
3	NJM4558D	HV REG
4	NJM2903D	HV DRIVE
5	NJM2903D	HV PROTECT 1
6	NJM2903D	HV PROTECT 2
7	NJM4558D	SUB H PIN
8	UPC318C	V CY DRIVE OUT
Q1	2SC3209	H PIN DRIVE 1
2	2SC3263	H PIN OUT
3	2SC3209	H PIN DRIVE 2
4	2SD1138	H DRIVE 1
5	2SD2995	H OUT
6	2SD1137	H CENT 1
7	2SB860	H CENT 2
8	2SA1175	V BIAS
9	2SA979	V PREAMP
10	2SC1890A	V DRIVE 2
11	2SD1137	V OUT 1
12	2SC1890A	V DRIVE 1
13	2SA893A	V DRIVE 3
14	2SB860	V OUT 2
15	2SC2787	HP AMP 1
16	2SC2362K	HCT DRIVE 1
17	2SC2362K	HCT DRIVE 2
18	2SC1890A	HCT DRIVE 3
19	2SD669A	HCT OUT 1
20	2SA893A	HCT DRIVE 4
21	2SD669A	HCT OUT 2
22	2SA1175	V CY BIAS
23	2SA979	V CY PREAMP
25	2SD669A	V CY OUT 1
26	2SC1890A	V CY DRIVE 1
27	2SA893A	V CY DRIVE 2
28	2SD669A	V CY OUT 2
29	2SA1175	HV DRIVE 1
30	2SD789	HV DRIVE
31	2SC3387	HV OUT
32	2SB740	HV REG DRIVE
33	2SA1156	-120V REG
34	2SC3209	DF
35	2SC278	ABL BUFF 2
36	2SA1175	ABL BUFF 1
37	2SC2878	HP AMP 2
38	2SC2785	HP OUT
39	2SA1175	HP SW
40	2SC2785	PIN DRIVE
41	2SC2335	SUB H PIN OUT
42	2SC2785	PW SW
43	2SC2785	PW SW
44	2SB649A	V CY DRIVE OUT
45	2SD669A	V CY DRIVE OUT
46	2SD1137	V CY DRIVE OUT
47	2SB860	V CY DRIVE OUT
48	2SA1221	I1 PROTECT
49	2SA1221	IK DET
D1	1SS119	H PIN PROT
2	RH-1	H PIN PROT
3	RH-1	H DRIVE
4	ERD09-15	DUMP 3
5	ERD28-08S	SW 1
6	V19EF1	H CENT 1
7	V19EF1	H CENT 2
8	1SS119	BIAS 1
9	1SS119	BIAS 2
10	1SS119	BIAS 3
11	1SS119	BIAS 4
12	1SS119	BIAS 5
13	RH-1	V SUPPLY
14	RH-1	PROTECT
15	CRO2AM-8	Vcc SW
16	ERD31-04	+20V RECT
17	ERD31-04	-20V RECT
18	V19EF1	-200V RECT
19	V19EF1	SW 1
20	V19EF1	SW 2
21	1SS119	BIAS 6
22	1SS119	BIAS 7
23	1SS119	BIAS 8
24	1SS119	BIAS 9
25	1SS119	BIAS 10
26	ERD31-04	+30V RECT
27	ERD31-04	-30V RECT
28	RH-1	HV DRIVE
29	ERD28-08S	D UMP 1
30	ERD28-08S	D UMP 2
31	ERD31-04	HEATER REG
32	V11N	-120V REF 1
33	HZT33-02	30V REF 1
34	HZT33-02	30V REF 2
35	HZT33-02	30V REF 3
36	HZT33-02	30V REF 4
37	1SS119	HV PROT 1
38	1SS119	HV PROT 2
39	HZT33-02	HV PROTECT REF 1
40	HZT33-02	HV PROTECT REF 2
41	1SS119	ABL STOP 1
42	1SS119	ABL STOP 2
43	1SS119	HV STOP 1
44	1SS119	HV STOP 2
45	CRO2AM-4	HV PROT
46	V19EF1	H STOP 1
47	1SS119	BIAS 11
48	RD6.2EL2	H REF
50	RH-1	V STOP 1
51	RD10EL2	IK STOP
52	RD10EL2	V REF
53	1SS119	HV PROT 3
54	1SS119	H STOP OUT
57	SG-264A	HV REC
58	V19EF1	CLAMP
60	ERD28-08S	PIN 1
61	ERD28-08S	PIN 2
62	1SS119	CLAMP
63	ERC28-15S	DUMP 3
64	V19G	SHORT
65	1SS119	AND 1
66	1SS119	AND 2
67	1SS119	PROTECT
68	1SS119	BIAS 13
69	RD15ESB1	
70	RD15ESB1	
71	1SS119	
72	1SS119	
73	CRO2AM-4	I1 PROTECT
74	1SS119	
76	CRO2AM-4	
77	1SS119	

● : Conductor side pattern

● : Component side pattern

E board (H/V DEFLECTION OUTPUT, DYNAMIC FOCUS, ENT REG)

E, K, P E, K, P

K board (DYNAMIC FOCUS, CONNECTOR RELAY)

P board (EHT TRANSFORMER)

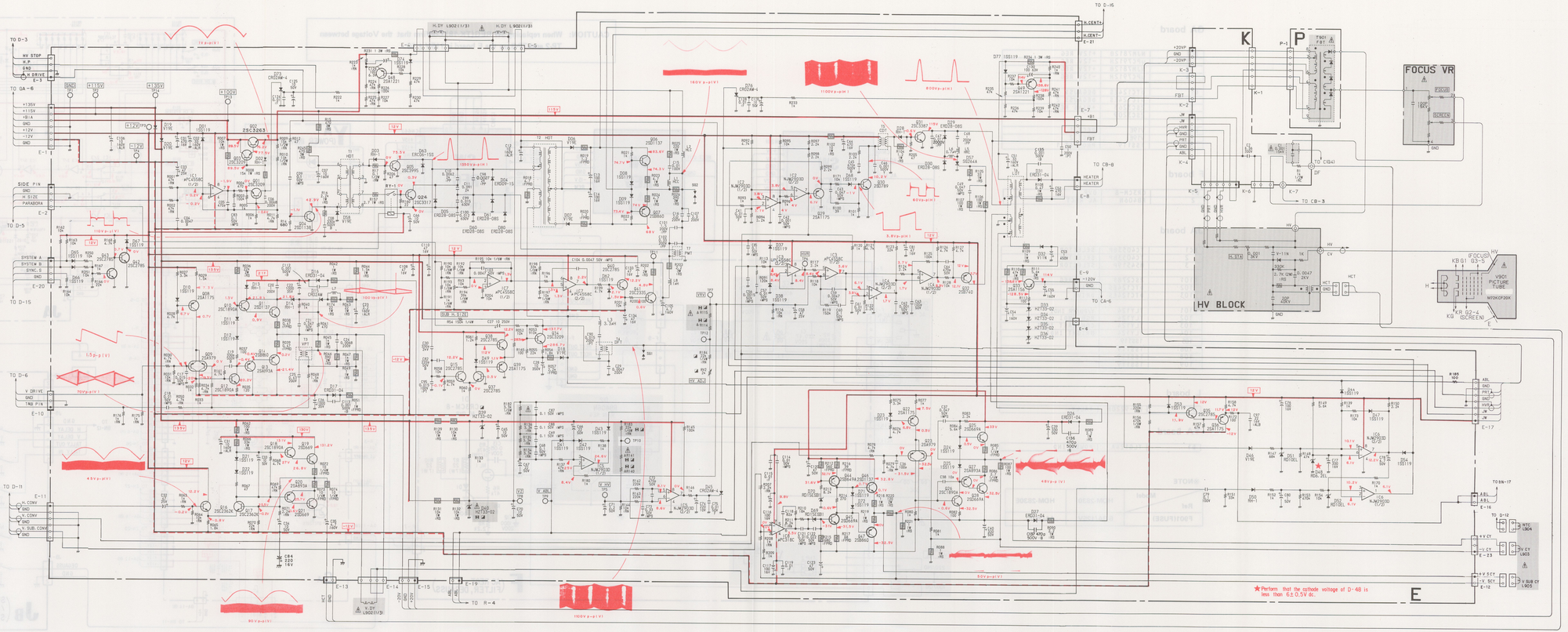

GA, F, JA, JB, L, YA

GA board (+12V/−12V REG, DEGAUSS) F board (LINE FILTER, AC SUPP SW, DEGAUSS)
JA board (SIGNAL SELECT CONTRAST/BRIGHTNESS VOLUMES) JB board (SCAN MODE/DELAY SWITCH) L board (TALLY LAMP) YA board (POWER INDICATOR)

GA board

IC1	NJM7812B	+12V REG
2	uPC7912H	−12V REG
3	NJM7812B	+12V REG
4	uPC7912H	−12V REG
Q1	DTC124ES	DEGAUSS 1
2	DTC124ES	DEGAUSS 2
3	2SC3263	+BIAS REG
4	2SC3209	
D1	V19E	RECT 1
2	V19E	RECT 2
3	1SS119	PROTECT 1

F board

D1	CR3CM-8	OVP
2	RB406N	AC RECT

JA board

IC1	TC4053BP	SELECTOR
2	TC4053BP	SELECTOR
3	M54519P	SELECTOR
Q101	2SC2785	+10V REG
102	DTC124ES	DRIVE
103	DTC124ES	DRIVE
D101	TLY124	Y/PB/PR IND1
102	TLY124	RGB IND1
103	TLY124	CONTRAST IND1
104	TLY124	BRIGHT IND1
105	1SS119	
106	1SS119	
108	1SS119	
109	1SS119	

L board

D1	LT-9220H	TALLY

YA board

D1	TLG124A	POWER IND

※NOTE

Ref \ Model	HDM-2830	HDM-2830E
F901(FUSE)	6.3A/125V	4A/250V

CAUTION: When replacing SW REG(TK-18),Confirm that the Voltage between TP-2 and TP-3 on the E board is 115V ± 10.

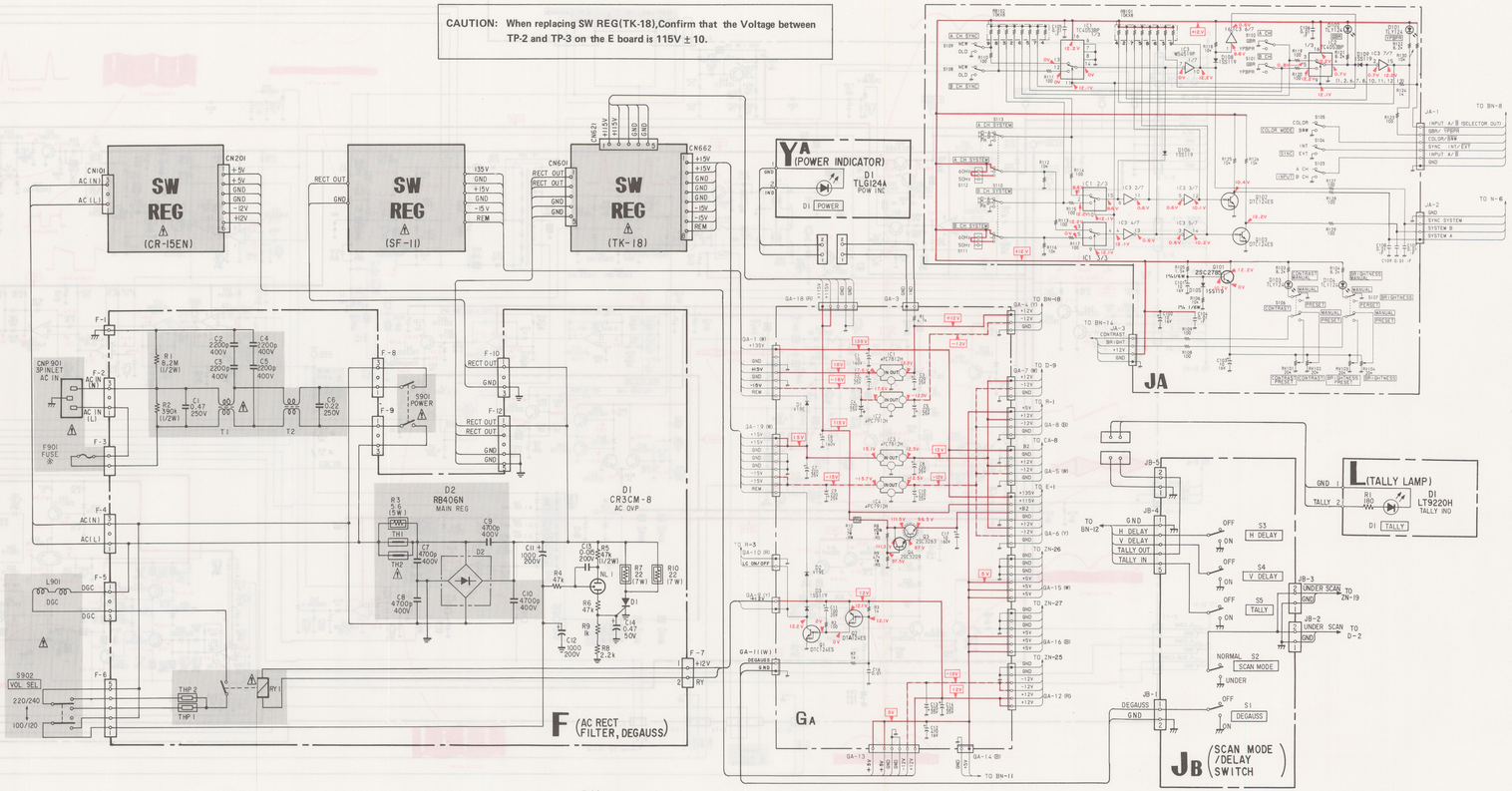

GA board (+12V/−12V REG, DEGAUSS)

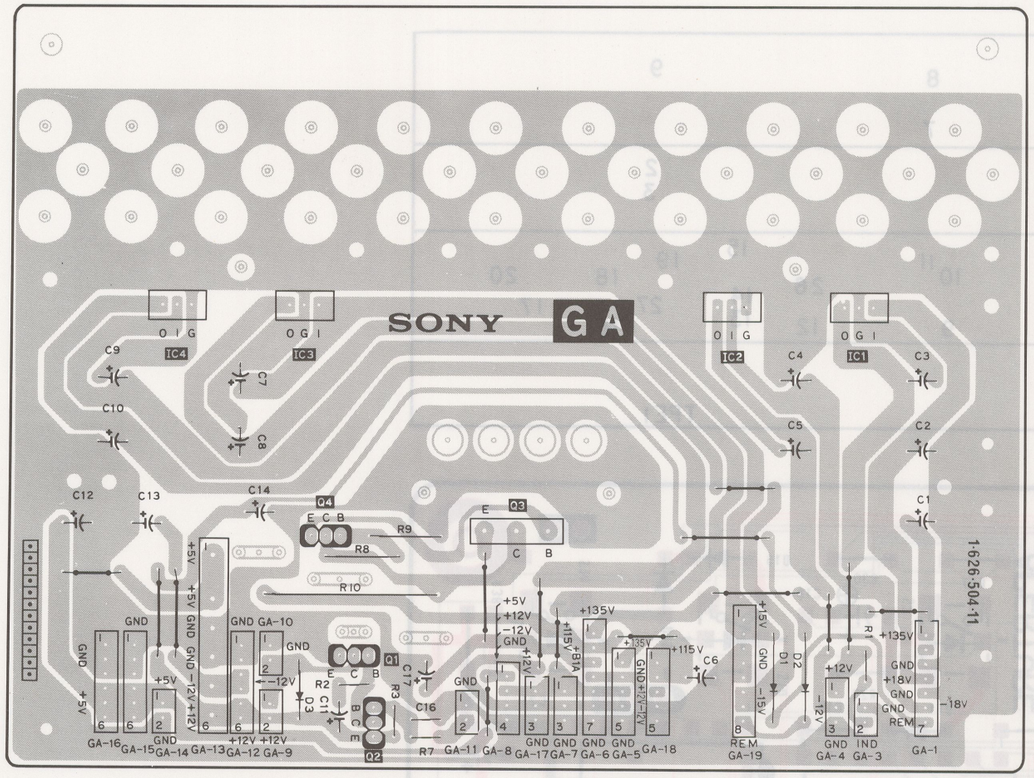

F board (LINE FILTER, AC SUPP SW, DEGAUSS)

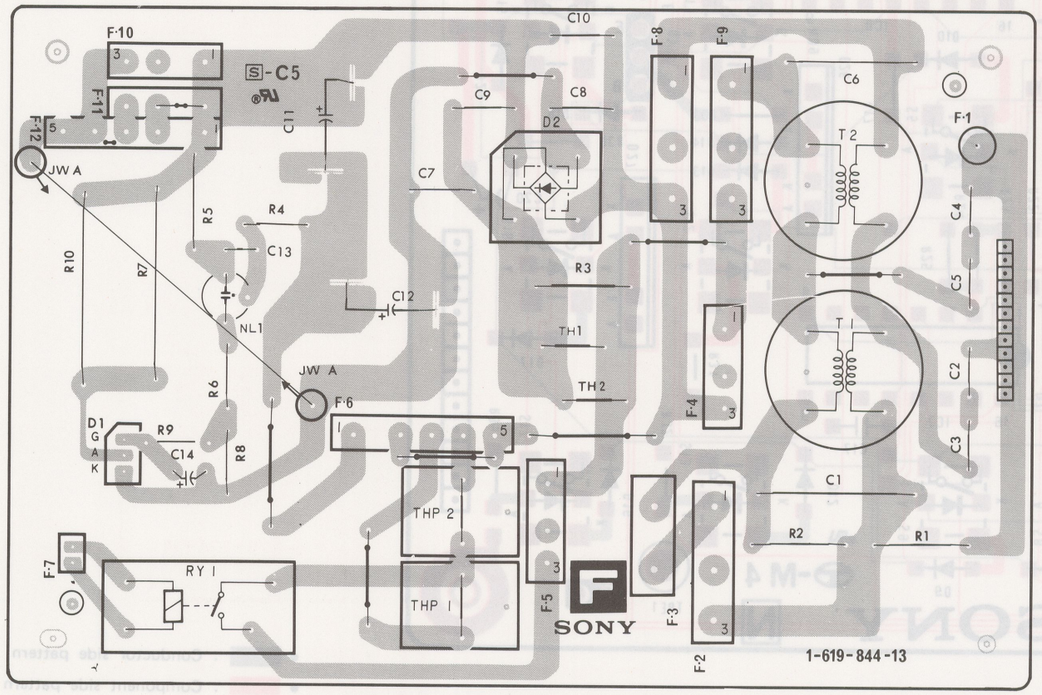

JA board (SIGNAL SELECT CONTRAST/ BRIGHTNESS VOLUMES)

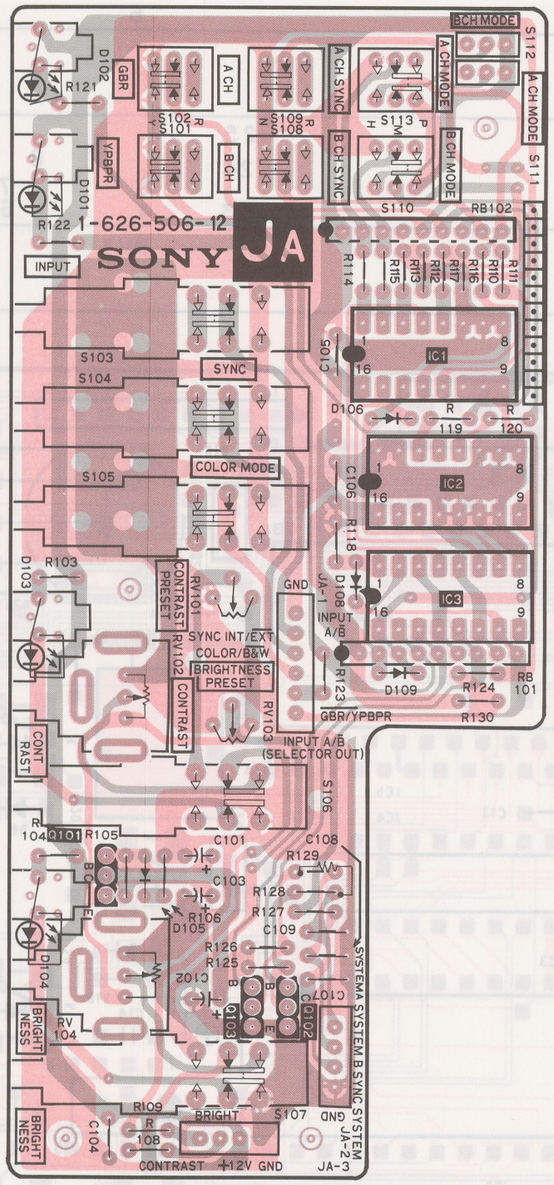

YA board (POWER INDICATOR)

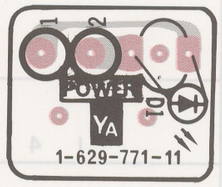

JB board (SCAN MODE/DELAY SWITCH)

1-598-933-12

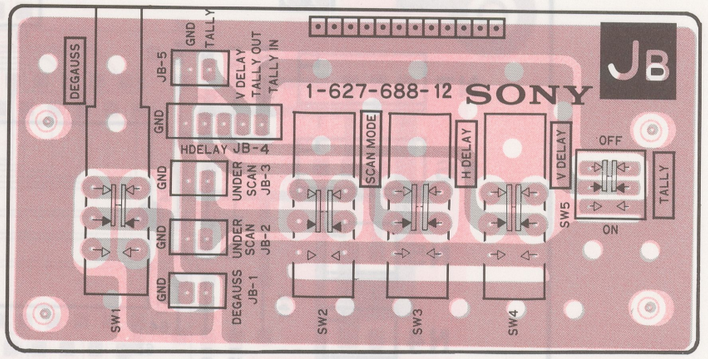

L board (TALLY LAMP)

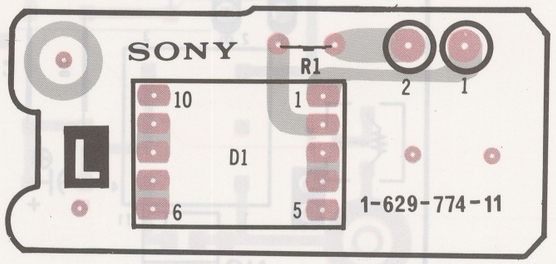

• : Conductor side pattern
• : Component side pattern

N board (CONTROL UNIT)

IC	5 4 3 2 6 8 7 9
Q	1 4 2 3
D	28 29 25 24 23 5 4 8 7 6 10 11 9 26 12 15 14 13 19 27 18 16 20 17
ADJ TP	RV4 RV3 TPE1

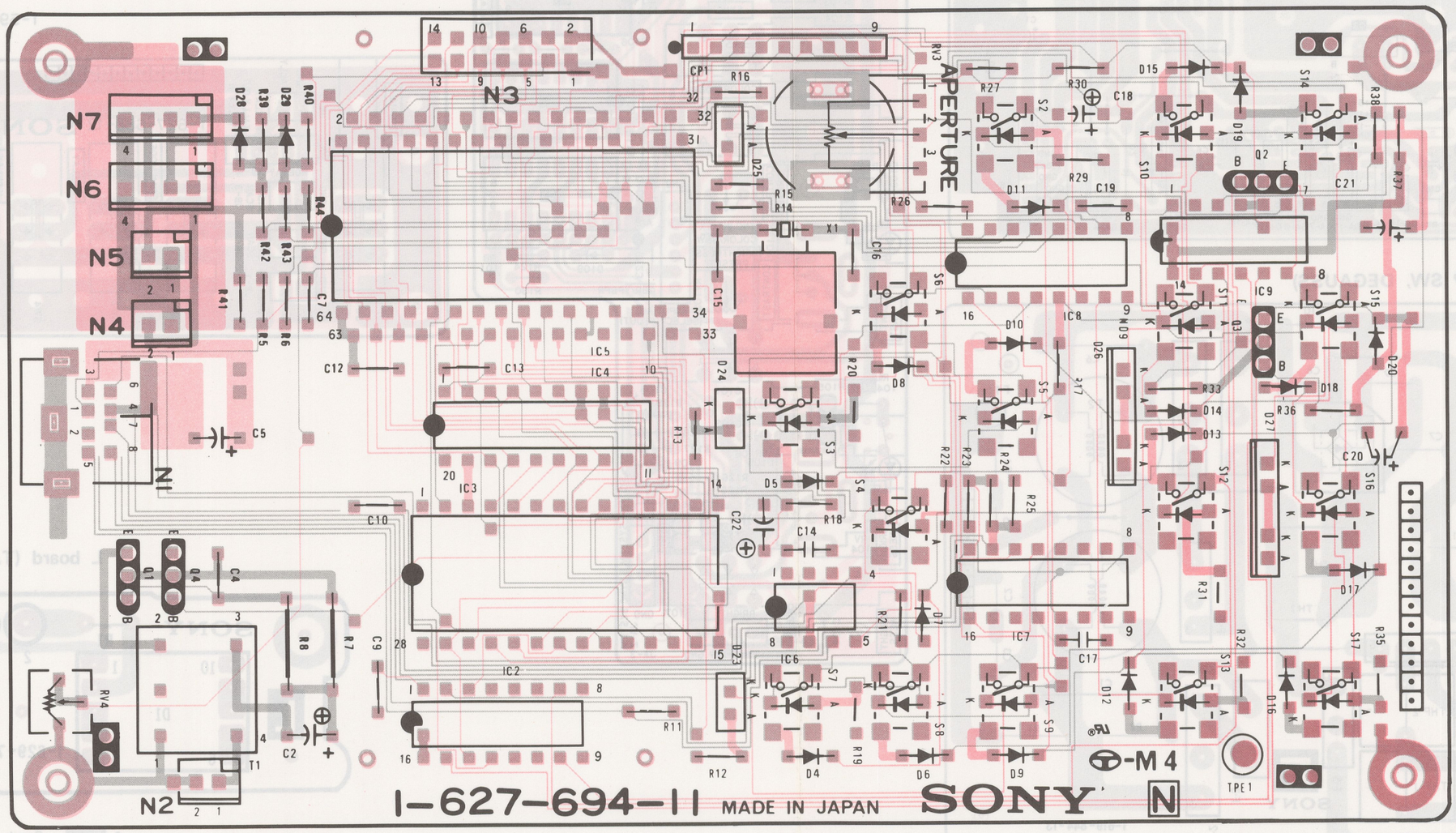

• : Conductor side pattern
• : Component side pattern

N board (CONTROL UNIT)

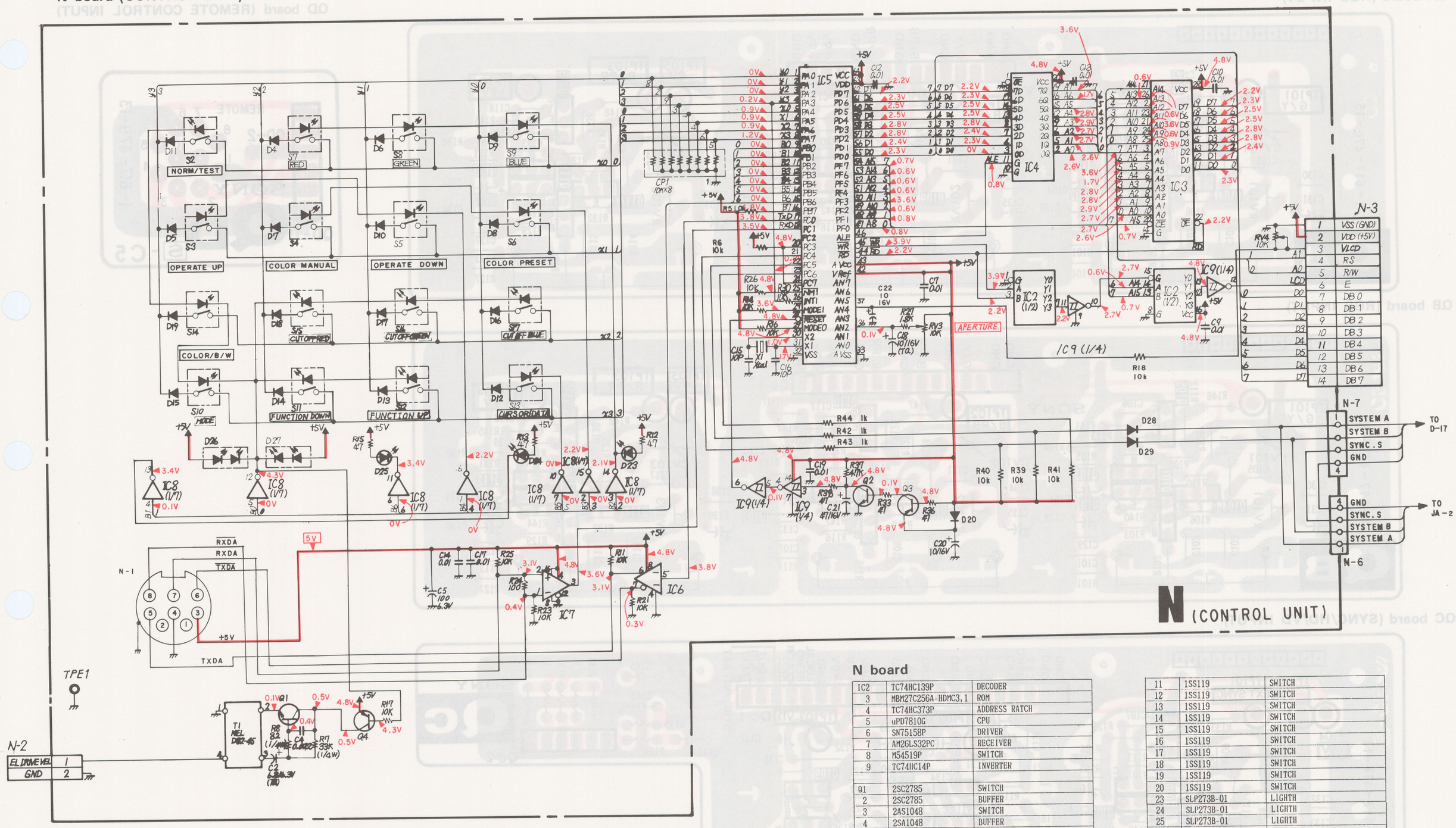

N board

IC2	TC74HC139P	DECODER
3	MBM27C256A-HDMC3,1	ROM
4	TC74HC373P	ADDRESS RATCH
5	uPD7810G	CPU
6	SN75158P	DRIVER
7	AM26LS32PC	RECEIVER
8	M54519P	SWITCH
9	TC74HC14P	INVERTER
Q1	2SC2785	SWITCH
2	2SC2785	BUFFER
3	2AS1048	SWITCH
4	2SA1048	BUFFER
D4	1SS119	SWITCH
5	1SS119	SWITCH
6	1SS119	SWITCH
7	1SS119	SWITCH
8	1SS119	SWITCH
9	1SS119	SWITCH
10	1SS119	SWITCH
11	1SS119	SWITCH
12	1SS119	SWITCH
13	1SS119	SWITCH
14	1SS119	SWITCH
15	1SS119	SWITCH
16	1SS119	SWITCH
17	1SS119	SWITCH
18	1SS119	SWITCH
19	1SS119	SWITCH
20	1SS119	SWITCH
23	SLP273B-01	LIGHTH
24	SLP273B-01	LIGHTH
25	SLP273B-01	LIGHTH
26	SLP271E	LIGHTH
27	SLP271E	LIGHTH
28	1SS119	SWITCH
29	1SS119	SWITCH

QA board (RGB INPUT)

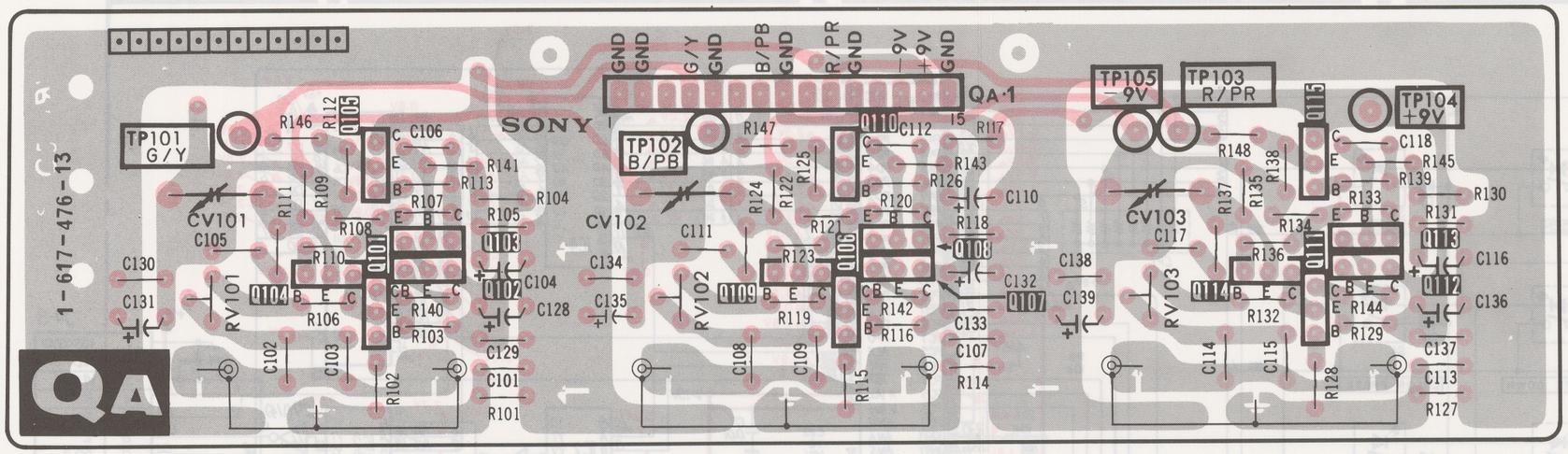

QB board (RGB INPUT)

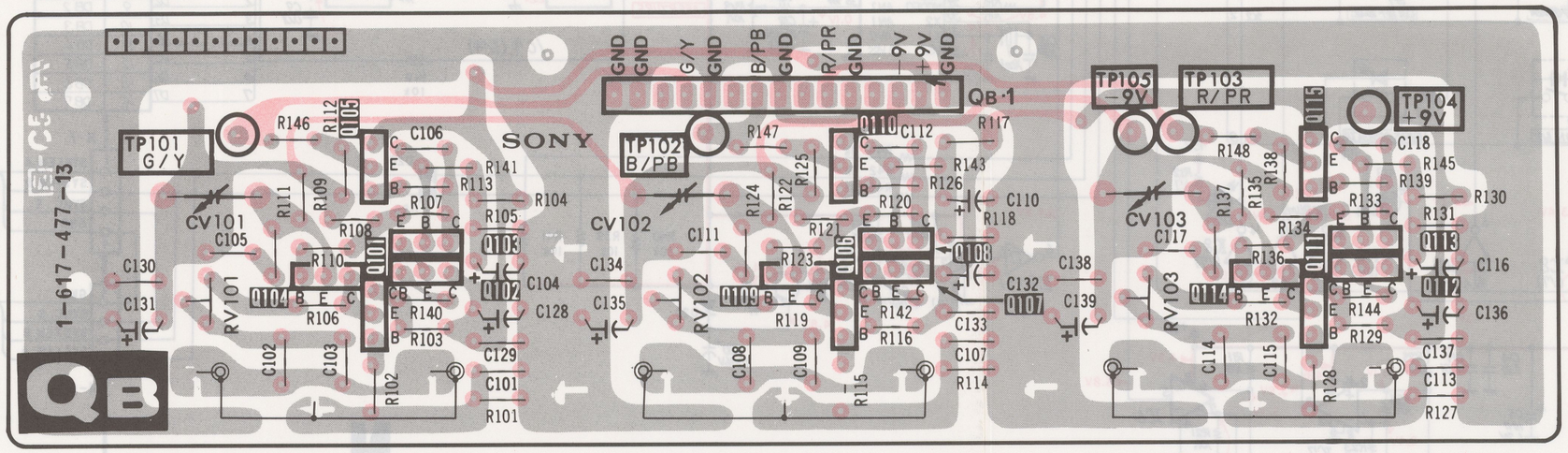

QC board (SYNC/HD/VD INPUT)

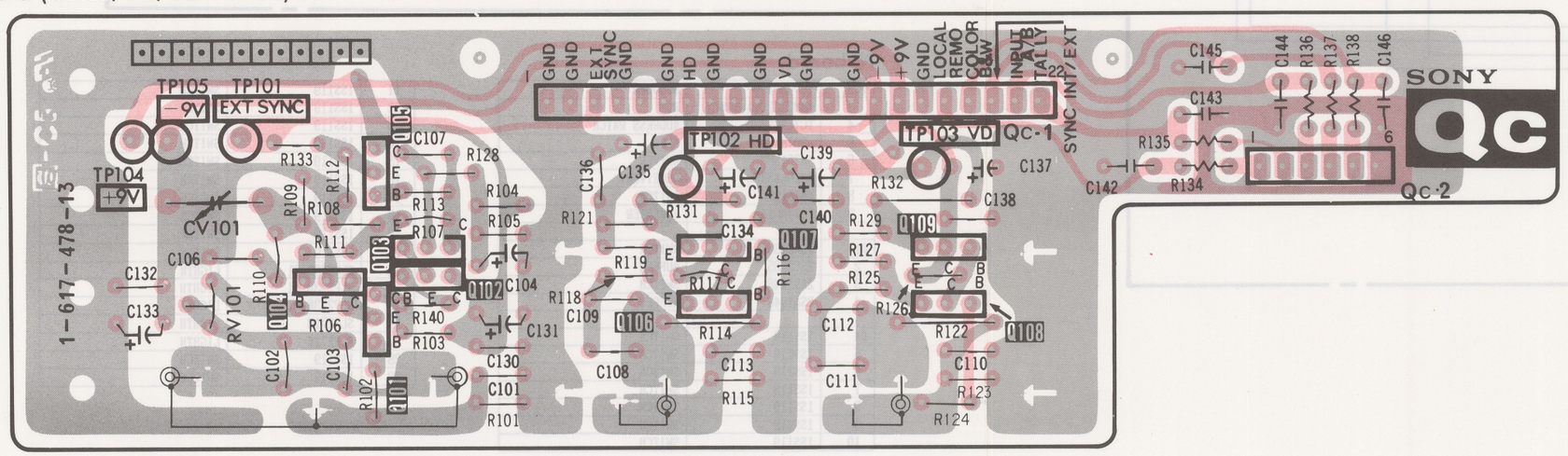

QD board (REMOTE CONTROL INPUT)

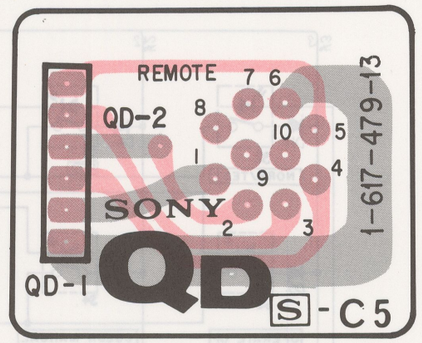

● : Conductor side pattern
● : Component side pattern

QA, QB, QC, QD

QA board (RGB INPUT) QB board (RGB INPUT) QC board (EXT SYNC/HD/VD INPUT) QD board (REMOTE CONTROL INPUT)

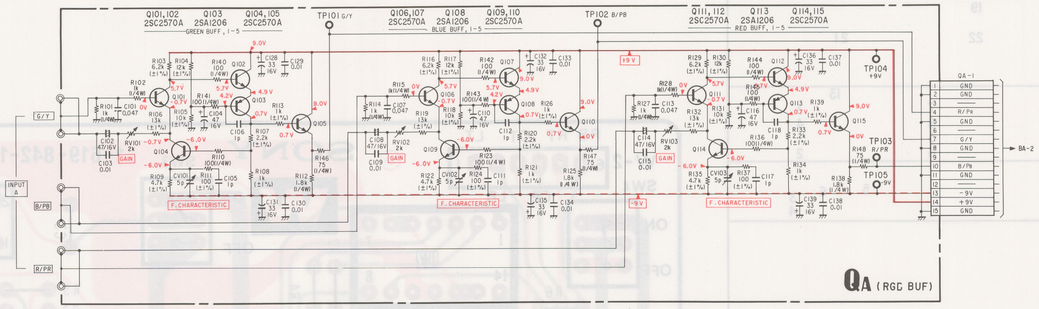

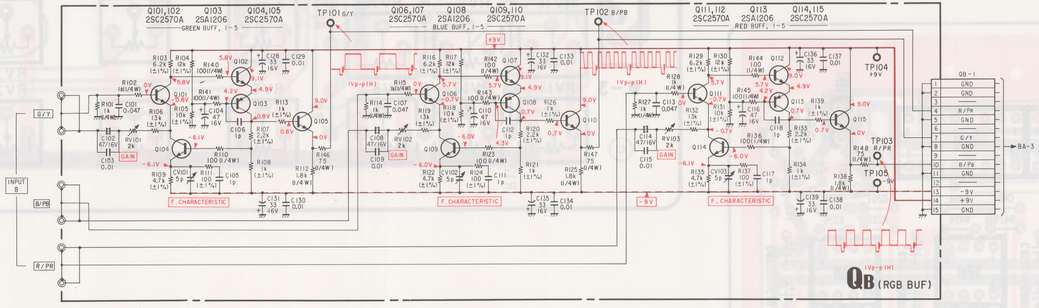

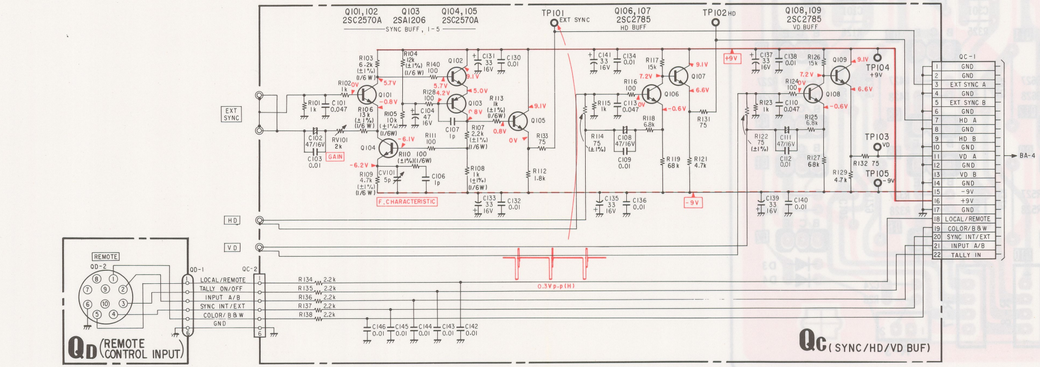

5-109

5-110

5-111

QA board

Q101	2SC2570A	RED BUFF.1
102	2SC2570A	RED BUFF.2
103	2SA1206	RED BUFF.3
104	2SC2570A	RED BUFF.4
105	2SC2570A	RED BUFF.5
106	2SC2570A	GREEN BUFF.1
107	2SC2570A	GREEN BUFF.2
108	2SA1206	GREEN BUFF.3
109	2SC2570A	GREEN BUFF.4
110	2SC2570A	GREEN BUFF.5
111	2SC2570A	BLUE BUFF.1
112	2SC2570A	BLUE BUFF.2
113	2SA1206	BLUE BUFF.3
114	2SC2570A	BLUE BUFF.4
115	2SC2570A	BLUE BUFF.5

QB board

Q101	2SC2570A	RED BUFF.1
102	2SC2570A	RED BUFF.2
103	2SA1206	RED BUFF.3
104	2SC2570A	RED BUFF.4
105	2SC2570A	RED BUFF.5
106	2SC2570A	GREEN BUFF.1
107	2SC2570A	GREEN BUFF.2
108	2SA1206	GREEN BUFF.3
109	2SC2570A	GREEN BUFF.4
110	2SC2570A	GREEN BUFF.5
111	2SC2570A	BLUE BUFF.1
112	2SC2570A	BLUE BUFF.2
113	2SA1206	BLUE BUFF.3
114	2SC2570A	BLUE BUFF.4
115	2SC2570A	BLUE BUFF.5

QC board

Q101	2SC2570A	SYNC BUFF.1
102	2SC2570A	SYNC BUFF.2
103	2SA1206	SYNC BUFF.3
104	2SC2570A	SYNC BUFF.4
105	2SC2570A	SYNC BUFF.5
106	2SC2785	HD BUFF.1
107	2SC2785	HD BUFF.2
108	2SC2785	VD BUFF.1
109	2SC2785	VD BUFF.2

R board (LANDING CORRECTION)

IC	9 10 7 18 17 16 20 19 4 3 1 2 6 14 13 12 23 22 21 5 11 8
Q	11 12 9 10 7 8 5 6 3 4 1 2 13
D	2 1 5 6 3 4
ADJ・TP	RV1 RV2 TP1 TP4 TP2 TP3 TP8 RV4 RV5 RV3 TP11 TP5 TP9 TP6 TP13 TP10 TP7

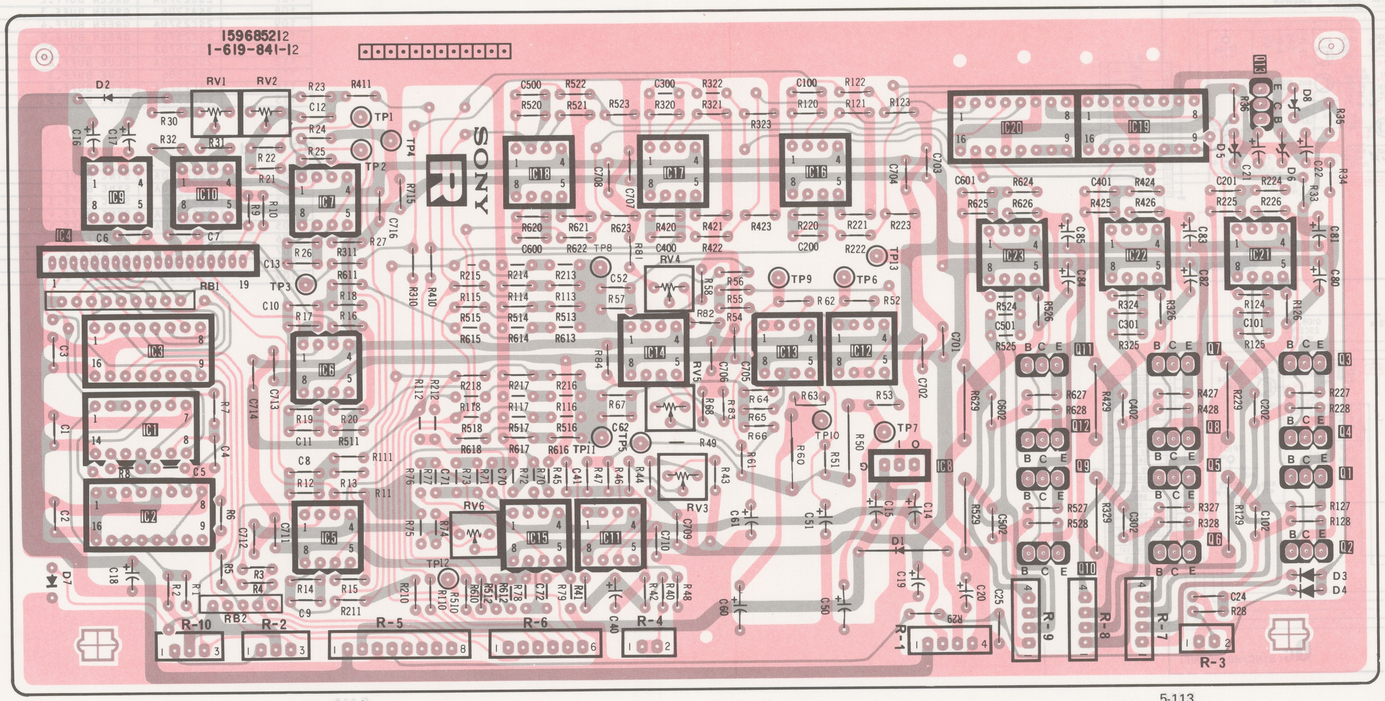

5-112

5-113

W board (LANDING CONTROL)

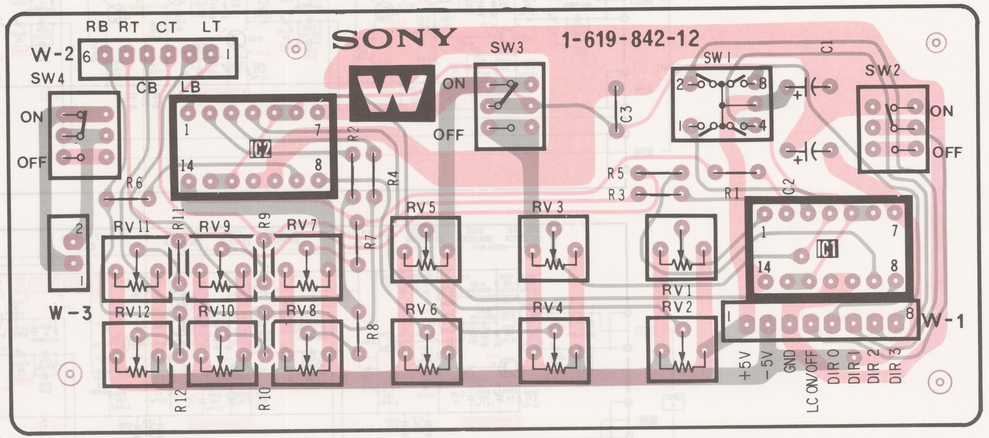

• : Conductor side pattern
• : Component side pattern

5-114

R board (LANDING CORRECTION) W board (LANDING CONTROL)

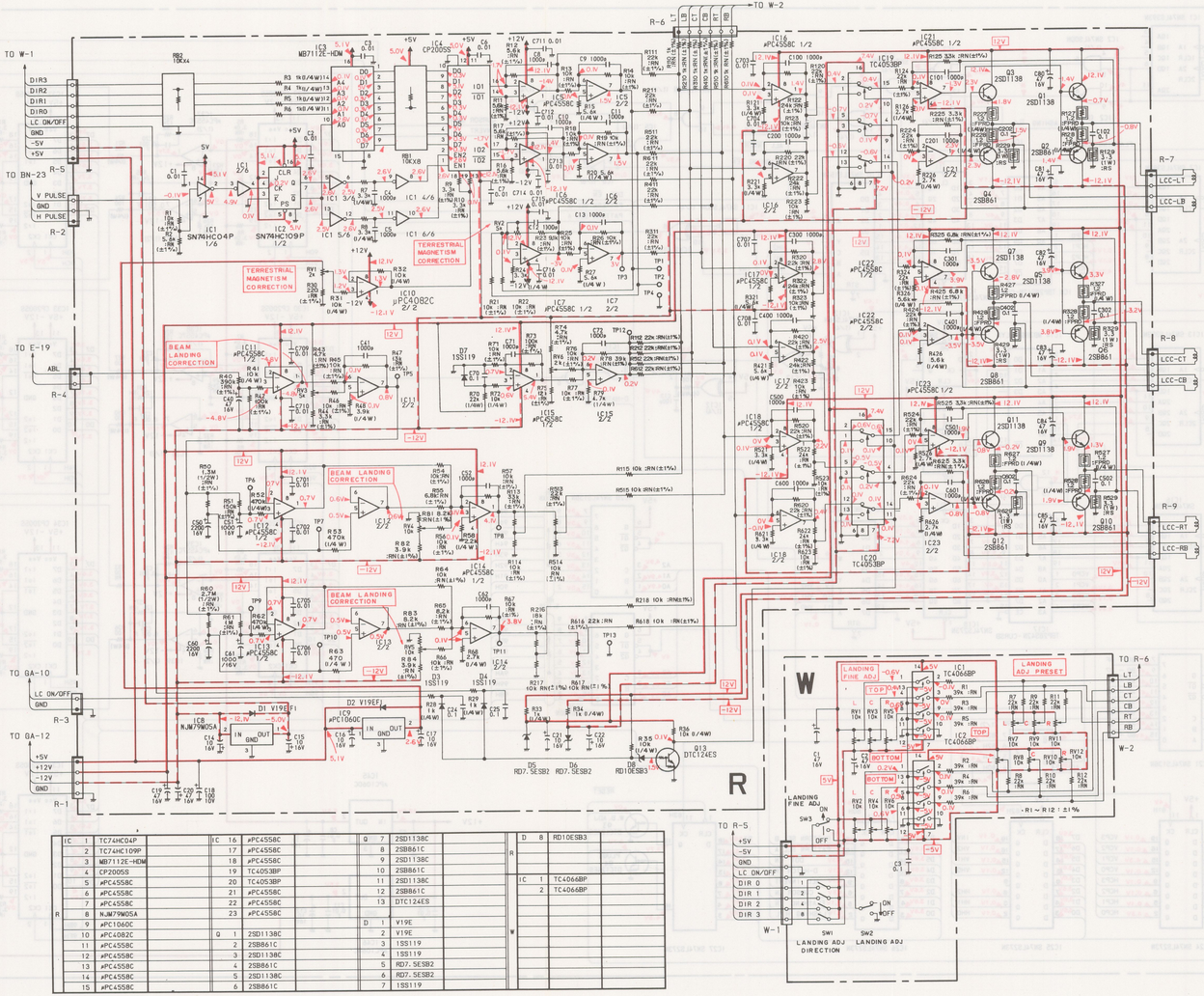

IC	1	TC74HC04P
	2	TC74HC109P
	3	MB7112E-HDM
	4	CP2005S
	5	μPC4558C
	6	μPC4558C
	7	μPC4558C
	8	NJM79M05A
	9	μPC1060C
	10	μPC4082C
	11	μPC4558C
	12	μPC4558C
	13	μPC4558C
	14	μPC4558C
	15	μPC4558C
IC	16	μPC4558C
	17	μPC4558C
	18	μPC4558C
	19	TC4053BP
	20	TC4053BP
	21	μPC4558C
	22	μPC4558C
	23	μPC4558C
Q	1	2SD1138C
	2	2SB861C
	3	2SD1138C
	4	2SB861C
	5	2SD1138C
	6	2SB861C
Q	7	2SD1138C
	8	2SB861C
	9	2SD1138C
	10	2SB861C
	11	2SD1138C
	12	2SB861C
	13	DTC124ES
D	1	V19E
	2	V19E
	3	1SS119
	4	1SS119
	5	RD7.5ESB2
	6	RD7.5ESB2
	7	1SS119
D	8	RD10ESB3
IC	1	TC4066BP
	2	TC4066BP

R board

IC1	SN74HC04N	BUFFER
2	SN74HC109N	FLIP FLOP
3	MB7112E-HDM	DATA MEMORY
4	CP2005S	LATCH & D/A
5	μPC4558C	D/A BUFFER & INVERTER 1
6	μPC4558C	D/A BUFFER & INVERTER 2
7	μPC4558C	SUM & INVERTER
8	NJM79M05A	-5V POWER SUPPLY
9	μPC1060C	D/A REF VOL
10	TL082CP	REF V BUFFER
11	μPC4558C	BUFFER & AMP 1
12	μPC4558C	BUFFER 1
13	μPC4558C	BUFFER 2
14	μPC4558C	SUM AMP 1
15	μPC4558C	BUFFER & AMP 2
16	μPC4558C	SUM AMP 2
17	μPC4558C	SUM AMP 3
18	μPC4558C	SUM AMP 4
19	TC4053BP	SWITCH 1
20	TC4053BP	SWITCH 2
21	μPC4558C	OUTPUT STAGE DRIVE 1
22	μPC4558C	OUTPUT STAGE DRIVE 2
23	μPC4558C	OUTPUT STAGE DRIVE 3
Q1	2SD1138	LCC DRIVE OUT 1
2	2SB861	LCC DRIVE OUT 1
3	2SD1138	LCC DRIVE OUT 2
4	2SB861	LCC DRIVE OUT 2
5	2SD1138	LCC DRIVE OUT 3
6	2SB861	LCC DRIVE OUT 3
7	2SD1138	LCC DRIVE OUT 4
8	2SB861	LCC DRIVE OUT 4
9	2SD1138	LCC DRIVE OUT 5
10	2SB861	LCC DRIVE OUT 5
11	2SD1138	LCC DRIVE OUT 6
12	2SB861	LCC DRIVE OUT 6
13	DTC124ES	OUTPUT CONTROLE
D1	V19G	PROTECT 1
2	V19G	PROTECT 2
3	1SS119	SW1
4	1SS119	SW2
5	RD7.5ESB2	7.5V REG
6	RD7.5ESB2	-7.5V REG
7	1SS119	TEMP SENSER
8	RD10ES-B3	

W board

IC1	TC4066BP	SWITCH 1
2	TC4066BP	SWITCH 2

ZA board

IC1	SN74LS393N	COUNTER
2	SN74LS00N	GATE
3	SN74LS00N	GATE
4	SN74LS08N	
5	SN74LS00N	GATE
6	SN74LS14N	
7	SN74LS393N	COUNTER
8	TBP28L42N-CURSB	TIMING GEN
9	SN74LS273N	LATCH
10	SN74LS151N	SELECTOR
11	SN74LS00N	GATE
12	SN74LS86N	GATE
13	SN74LS393N	COUNTER
14	MB7053-DLYC	V DELAY
15	SN74LS74AN	LATCH
16	SN74LS393N	COUNTER
17	TBP28S42N-CURSB	TIMING GEN
18	SN74LS273N	LATCH
19	SN74LS151N	SELECTOR
20	SN74LS138N	ADRS ENCODE 1
21	SN74LS138N	ADRS ENCODE 2
22	SN74LS139N	ADRS ENCODE 3
23	SN74LS244N	BUFFER
24	SN74LS273N	LATCH
25	SN74LS273N	LATCH
26	SN74LS273N	LATCH
27	SN74LS273N	LATCH
28	SN74LS138N	BUFFER
29	CP2005S	D/A
30	CP2005S	D/A
31	CP2005S	D/A
32	CP2005S	D/A
33	CP2005S	D/A
34	CP2005S	D/A
35	CP2005S	BUFFER
36	CP2005S	BUFFER
37	uPC4557C	BUFFER
38	uPC4557C	BUFFER
39	uPC4557C	BUFFER
40	uPC4557C	BUFFER
41	uPC4557C	VOLTAGE REF
42	uPC4557C	BUFFER
43	uPC4557C	BUFFER
44	uPC4557C	BUFFER
45	uPC1060C	VOLTAGE REF
46	uPC1060C	VOLTAGE REF
Q3	DTC124ES	
4	DTC124ES	

ZA board (CURSOR GEN, SG CONTROL, W-BALANCE, APERTURE CONTROL)

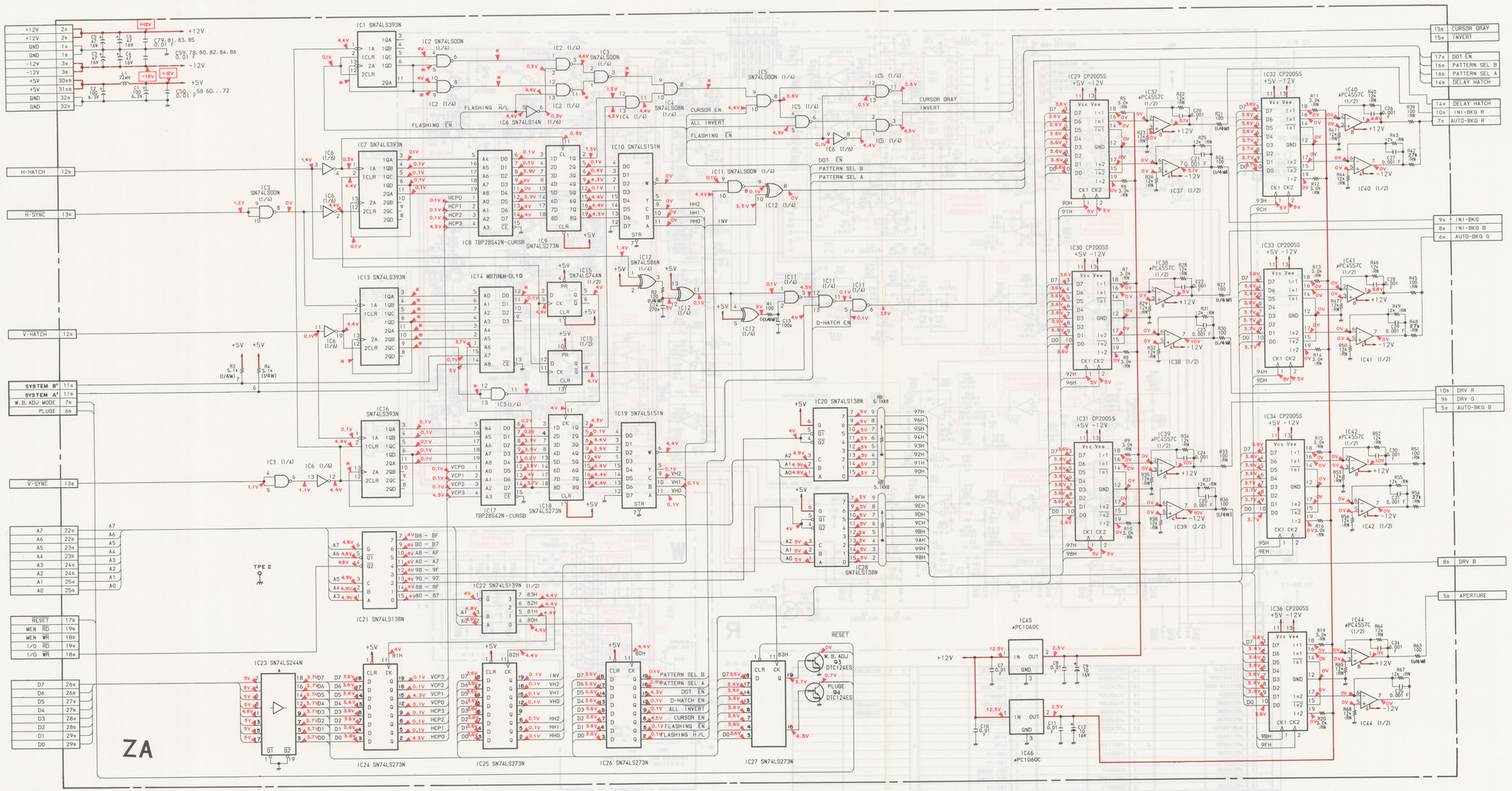

ZA board (CURSOR GEN, SG CONTROL, W-BALANCE, APERTURE CONTROL)

| | | |

ZC board (CPU/SYSTEM CONTROL)

| | | |

ZC board (CPU/SYSTEM CONTROL)

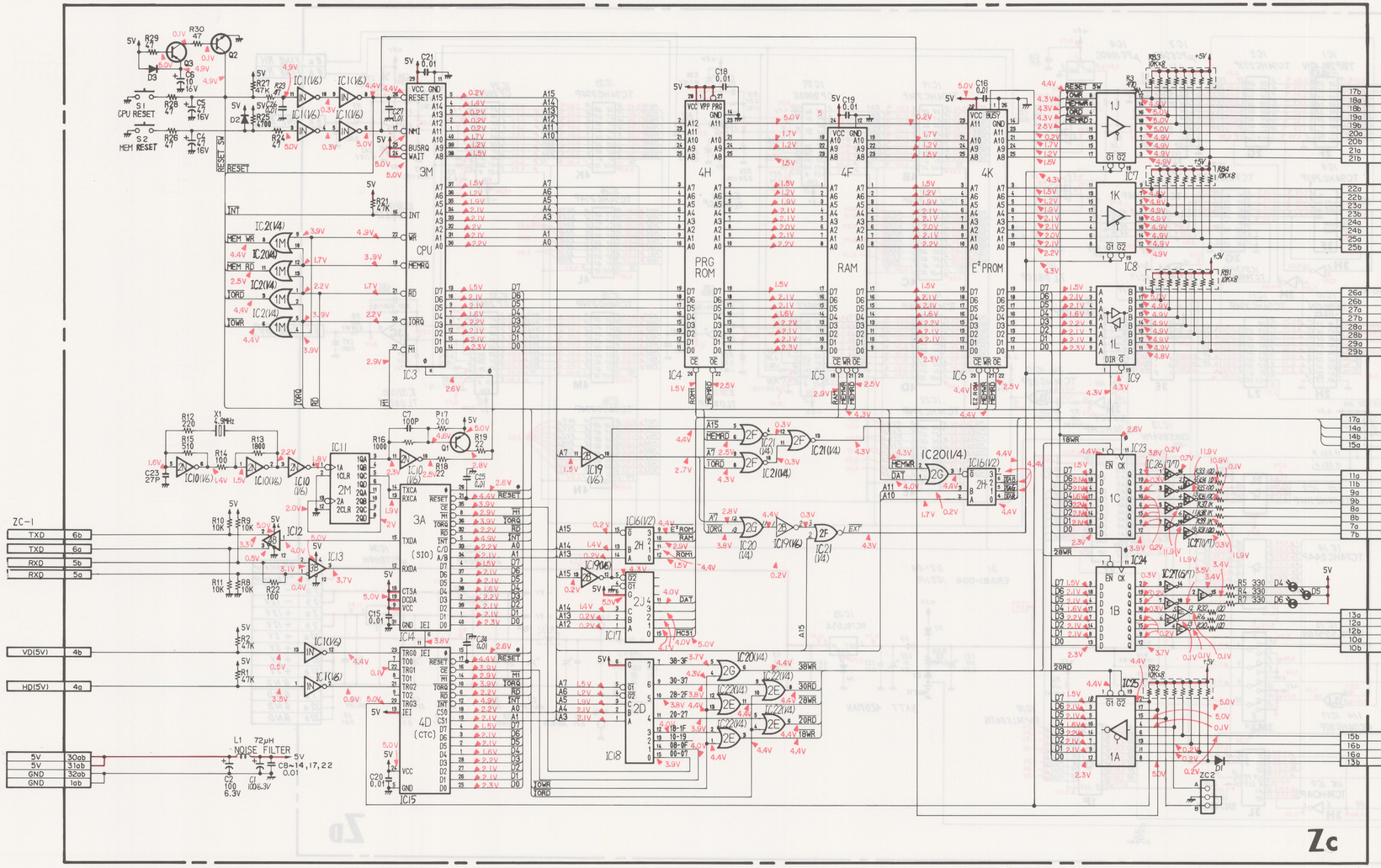

ZC board

IC1	SN74LS14N	
2	SN74LS32N	
3	LH0080A	
4	MBM2764-HDMH2.1	
5	CXK5816PN-12L	
6	HN58C65P-25	
7	SN74LS244N	
8	SN74LS244N	
9	SN74LS645N	
10	SN74S04N	
11	SN74LS393N	
12	AM26LS31PC	
13	AM26LS32PC	
14	LH0084A	
15	LH0082AD	
16	SN74LS139N	
17	SN74LS138N	
18	SN74LS138N	
19	SN74LS04N	
20	SN74LS32N	
21	SN74LS02N	
22	SN74LS32N	
23	SN74LS377N	
24	SN74LS377N	
25	SN74LS240N	
26	M54519P	
27	M54519P	
Q1	2SA733	
2	2SC2458	
3	2SA733	
D1	1SS119	PROT 1
2	1SS119	PROT 2
3	1SS119	PROT 3
4	TLR214	
5	TLR214	
6	TLR214	

ZD board

IC1	TBP28L42N-VAEB	V ADRS ENCODE
2	TC74HC273P	LATCH
3	uPC624C	D/A CONVERT
4	uPC1060C	VOLTAGE REF
5	TL082CP	VOLTAGE FOLLOWER
6	TC74HC393P	COUNTER
7	TC74HC283P	LATCH
8	TC74HC244P	BUFFER
9	TC74HC14P	INVERT
10	TBP28A2N-HAEC	H ADRS ENCODE
11	TC74HC374P	LATCH
12	TC74HC138P	ADRS
13	CXK5864PN-10L	MEMORY
14	TC74HC244P	BUFFER
15	SN74LS257AN	SWITCH
16	SN7470N	LATCH
17	TC74HC32P	GATE
18	SN74LS645N	BUFFER
19	TC74HC374P	LATCH
20	TC74HC374P	LATCH
21	TC74HC374P	LATCH
22	TC74HC374P	LATCH
23	TC74HC374P	LATCH
24	TC74HC374P	LATCH
25	TC74HC374P	LATCH
26	TC74HC374P	LATCH
27	CP2005S	D/A CONVERT
28	CP2005S	D/A CONVERT
29	CP2005S	D/A CONVERT
30	CP2005S	D/A CONVERT
31	TL082CP	I-V CONVERT
32	TL082CP	I-V CONVERT
33	uPC7908H	-8V REG
34	uPC7908H	+8V REG
35	NJM78L05A	+5V REG
D1	ERA81-005	PROTECT 1
2	1SS119	PROTECT 2
3	1SS119	PROTECT 3
4	1SS119	PROTECT 4

ZD board (DIGITAL CE CONVERGENCE)

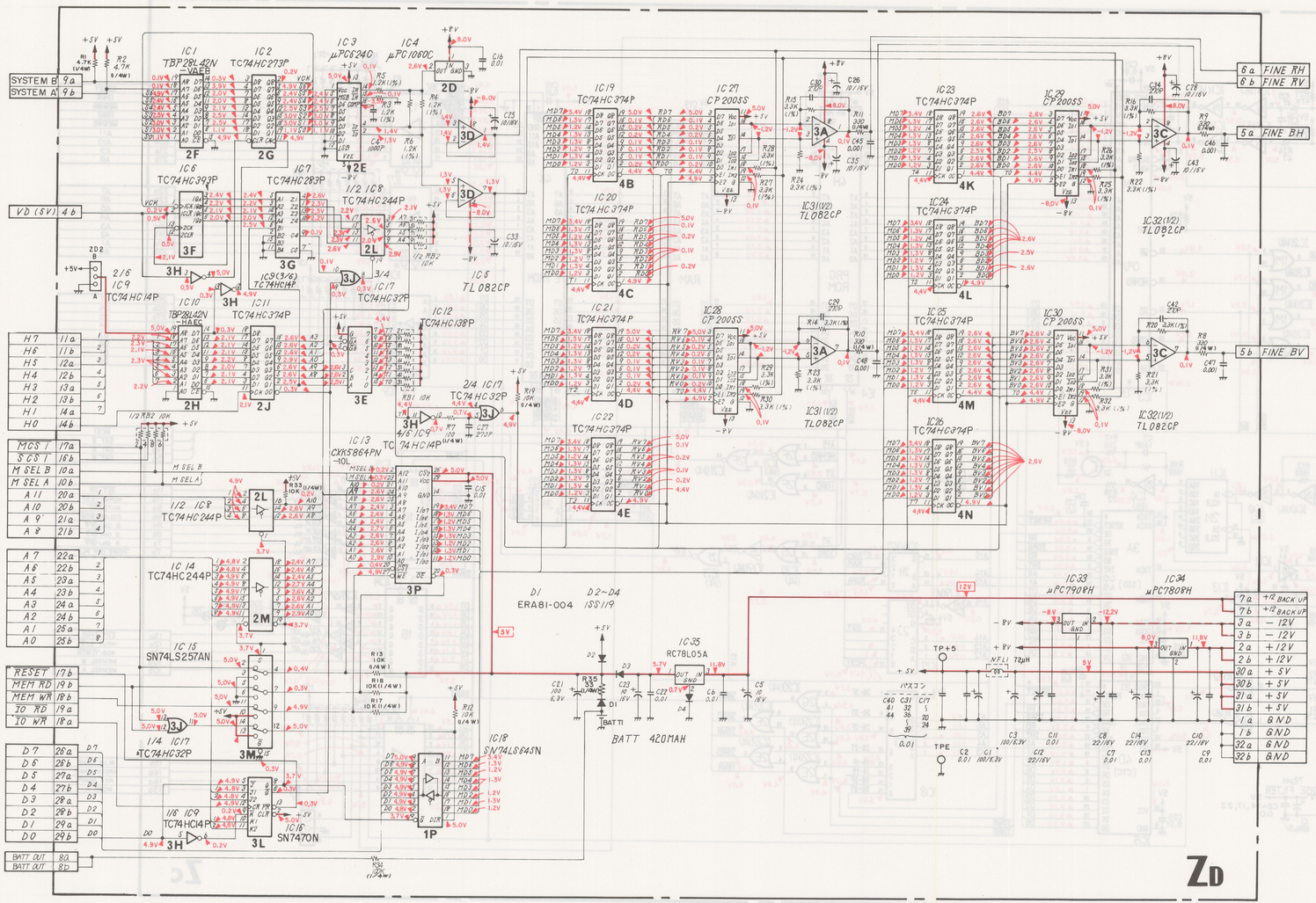

ZD board (DIGITAL CE CONVERGENCE)

| | | |

ZN board (CONTROL SYSTEM MOTHER BOARD)

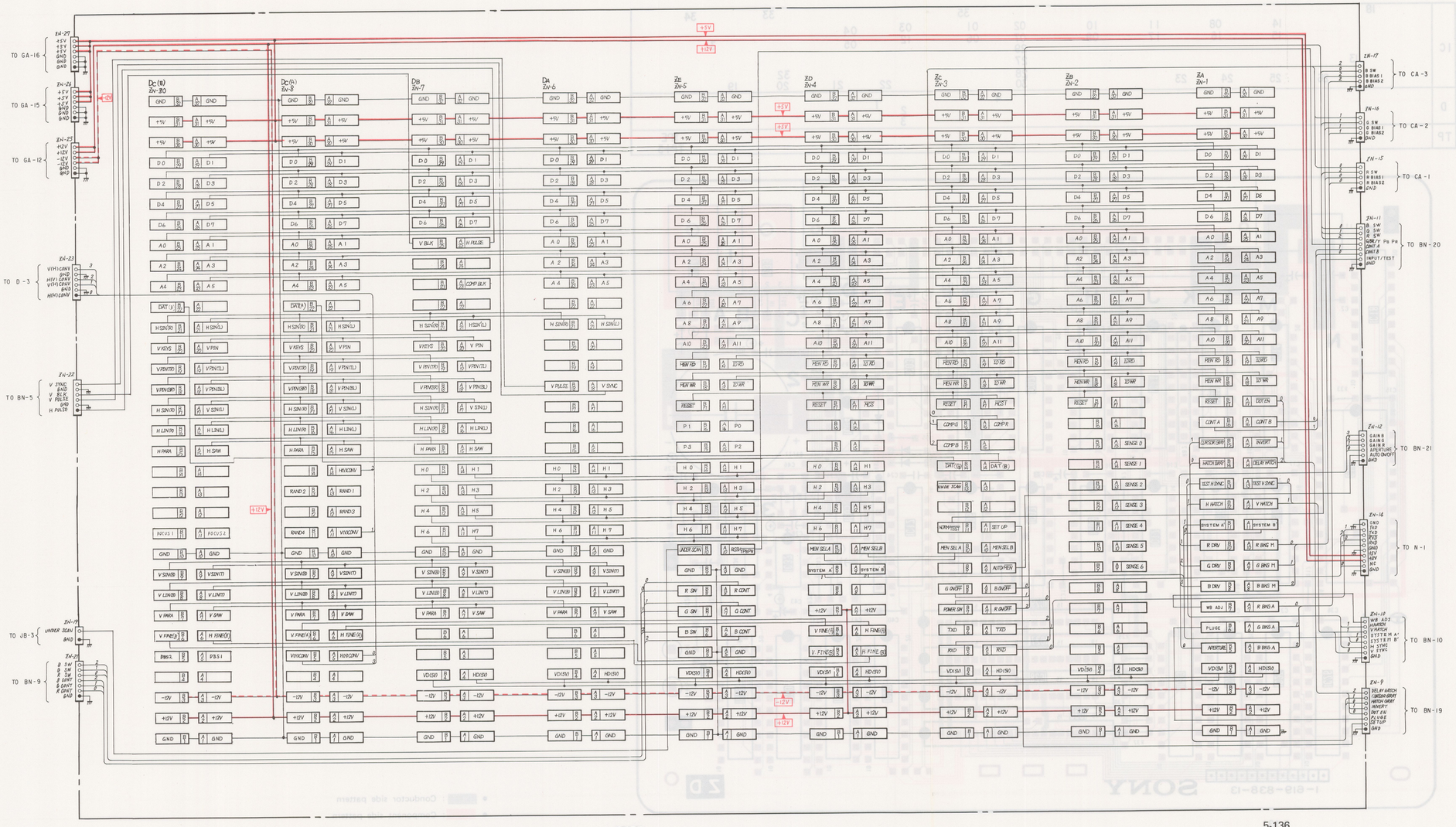

ZN board (MOTHER BOARD)

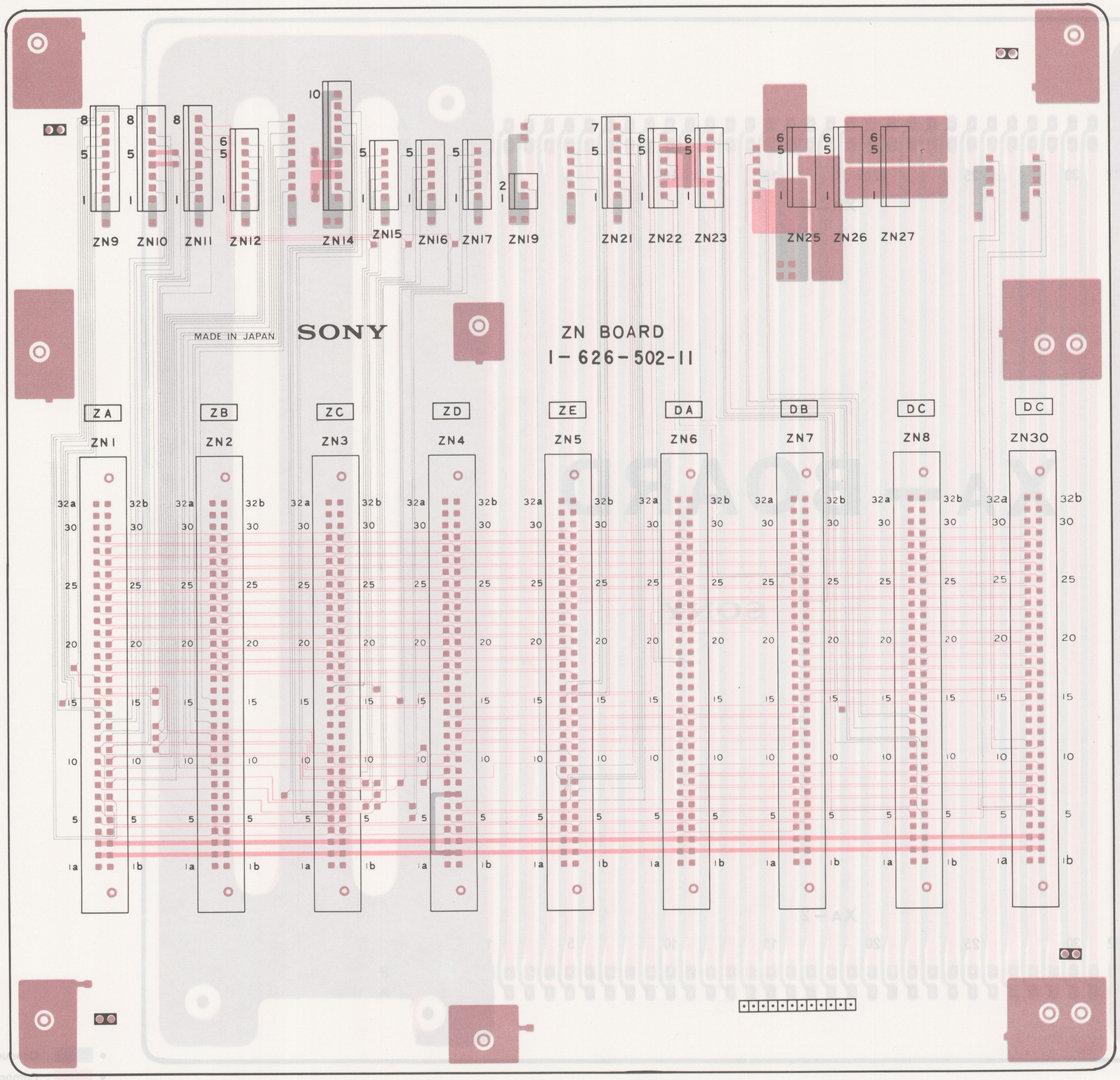

• : Conductor side pattern
• : Component side pattern

XA board (EXTENSION BOARD)

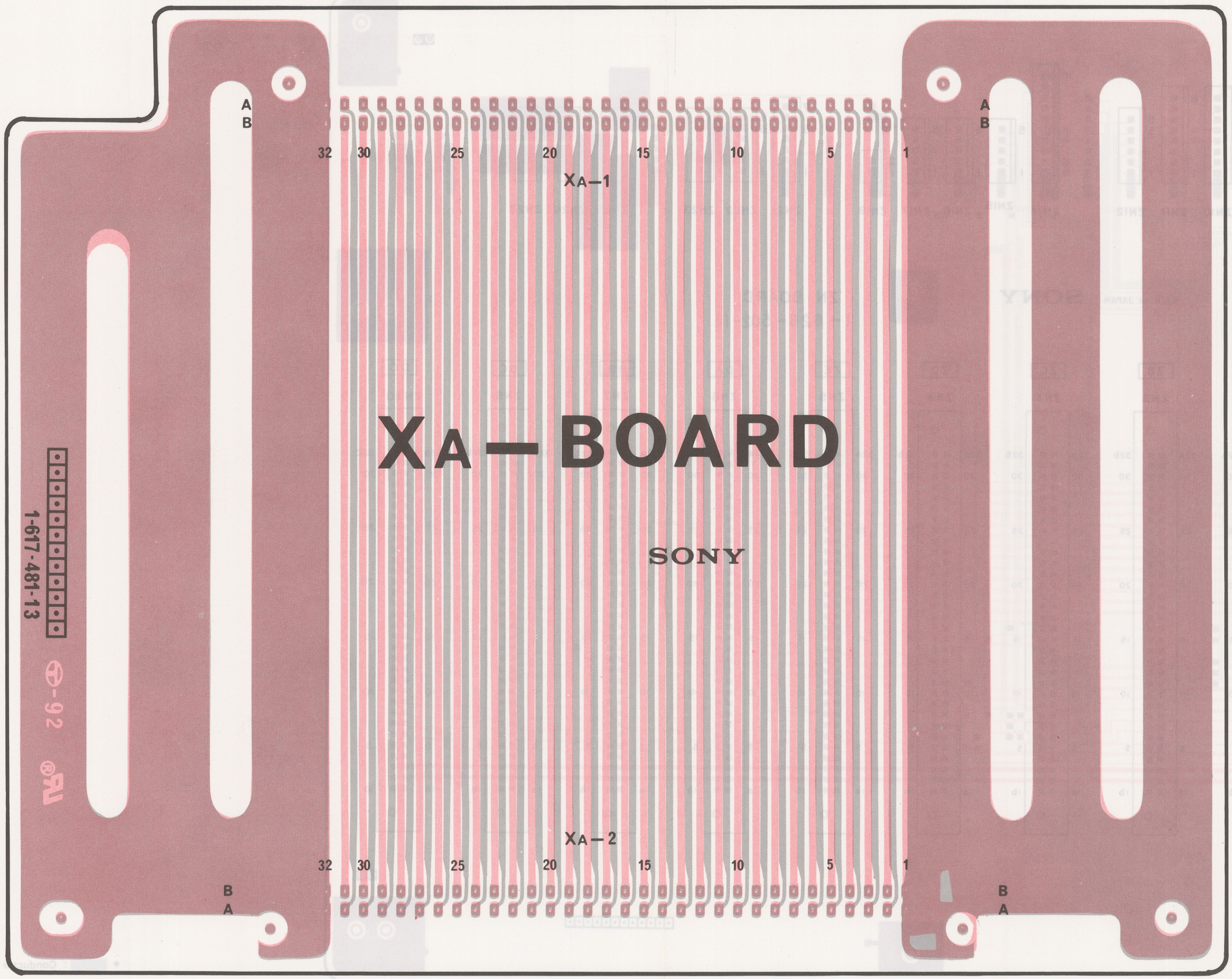

● : Conductor side pattern
● : Component side pattern

5-4. SEMICONDUCTORS

AM26LS31PC
AM26LS32PC
MB7053-COMPB
MB7053-DLYC
MB7053-PTD
MB7112E-HDM
MB84051B
MC74HC4053N
M54519P
SN74LS137N
SN74LS138N
SN74LS139N
SN74LS151N
SN74LS161AN
SN74LS163AN
SN74LS175N
SN74LS257AN
SN74LS283N
SN74S163N
TC4051BPHB
TC4053BP
TC74HC109P
TC74HC112P
TC74HC138P
TC74HC139P
TC74HC153P
TC74HC193P
TC74HC283P
TC74HC4538P

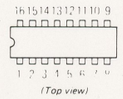

AN78L04
μPC78L05J

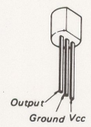

BX-1190

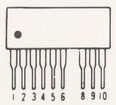

BX-1313

BX-1314

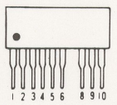

BX-1315

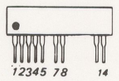

CP2005S
SN74LS240N
SN74LS244N
SN74LS273N
SN74LS377N
SN74LS645N
SN74LS682N
SN74S374N
TBP28L42N-VAEB
TBP28L42N-HAEC
TC74HC244P
TC74HC273P
TC74HC373P
TC74HC374P

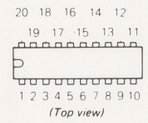

CXK5816PN
MB7138E-HSGH

CXK5864PN
HN58C65P-25
LH0082AC
MBM2764-HDMH2.1
MBM2764-VSGH
MBM27C256A-HDMC3.1

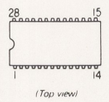

LA7016

LH0080A
LH0084A

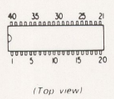

LM2903DC
NJM2903D
NJM4558D
NJM555D
RC4558DC
TL082CP
μPC1060C
μPC311C
μPC318C
μPC4082C
μPC4557C
μPC4558C
μPC624C

M5230L-A

MC74HC74N
MC1495L
MC1496P
MC4024P
MC4044P
SN74HC36N
SN74LS00N
SN74LS02N
SN74LS04N
SN74LS08N
SN74LS14N
SN74LS32N
SN74LS393N
SN74LS74AN
SL74LS86N
SN74S00N
SN74S04N
SN74HC05N
SN7406N
SN7407N
SN7470N
TC4066BP
TC5024BP
TC5025BP
TC74HC00P
TC74CHC04P
TC74HC14P
TC74HC32P
TC74HC74P
TC74HC393P
μPC339C

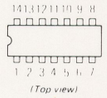

NJM7808A
μPC78M08H
μPC7808H

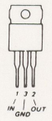

NJM7812
μPC7805H
μPC7812H

NJM79M05A
NJM7908A
μPC7912H

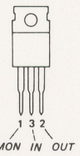

NJM79L05A

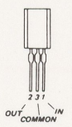

RC78L05A

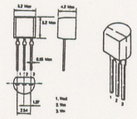

RC79L08A

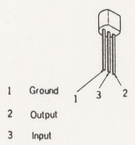

RC79L09A

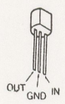

SN75158P

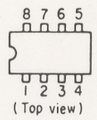

TBP28L42N-CURSB
TBP28L42N-H.PARA
TBP28L42N-H.SIN
TBP28S42N-CURSB

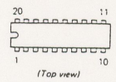

TX-429M

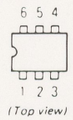

μPC1377C

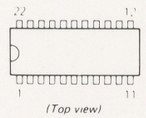

μPC574J-G

μPC78L05

μPD7810G

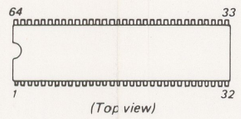

2SA1005
2SA1206
2SC1890A
2SC2362K
2SC2551
2SC2878

2SA1048
2SA1115P
2SC2458
2SC2603
2SC634SP
DTA124ES
DTC124ES
DTC114ES

2SA1156
2SA1406
2SA1407
2SB649A
2SC3600
2SC3601
2SD669A

2SA1175
2SC2785

2SA1208
2SA893A
2SB739
2SB740
2SD788
2SD789

2SA1221
2SC3209

2SA979

2SB860
2SB861
2SC2335
2SC3317
2SD1137
2SD1138

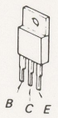

2SC2471
2SC2570A

2SC3263
2SC3387

2SC3595

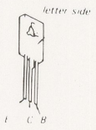

2SC3995

2SD982

2SK125

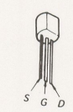

2SK523

1SS119
RD11ESB2
RD13ESB2
RD15ESB2
RD3.9ESB2
RD5.1ESB2
RD6.2ESB2
RD9.1ESB2

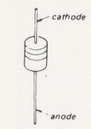

CR3CM-8

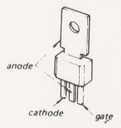

ERD09-15
ERD28-08S
RD10EL2
RD10ESB3
RD13EB3
RD15EB2
RD15ESB2
RD3.9EB1
RD4.7ESB2
RD5.1ESB2
RD5.6EB1
RD5.6ESB2
RD6.2EL2
RD7.5ESB2
RD8.2ESB2

ERA81-005
ERC06-15

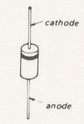

ERC38-06
V19C
V19E
V19EF1
V19G

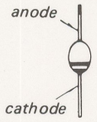

ERD31-04

GL3HY8
TLG124A
TLY124

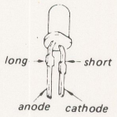

LN25RP
TLR214

LT-9220H

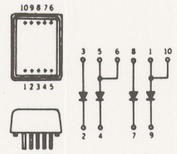

RB406NH

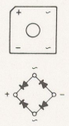

RH-1A

S3WB60Z

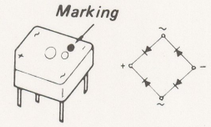

SLP271E

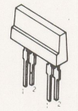

SLP273B-01

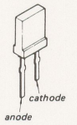

V11N

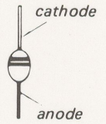

SECTION 6
EXPLODED VIEWS

NOTE:
- Items with no part number and no description are not stocked because they are seldom required for routine service.
- The construction parts of an assembled part are indicated with a collation number in the remark column.
- Items marked " ⋆ " are not stocked since they are seldom required for routine service. Some delay should be anticipated when ordering these items.

The components identified by shading and mark ⚠ are critical for safety.
Replace only with part number specified.

6-1. BEZEL

▲ : P3x8 7-682-548-04
■ : B4x8 7-682-561-09
□ : BVTP4x12 7-685-661-14
○ : BVTP3x8 7-685-646-79

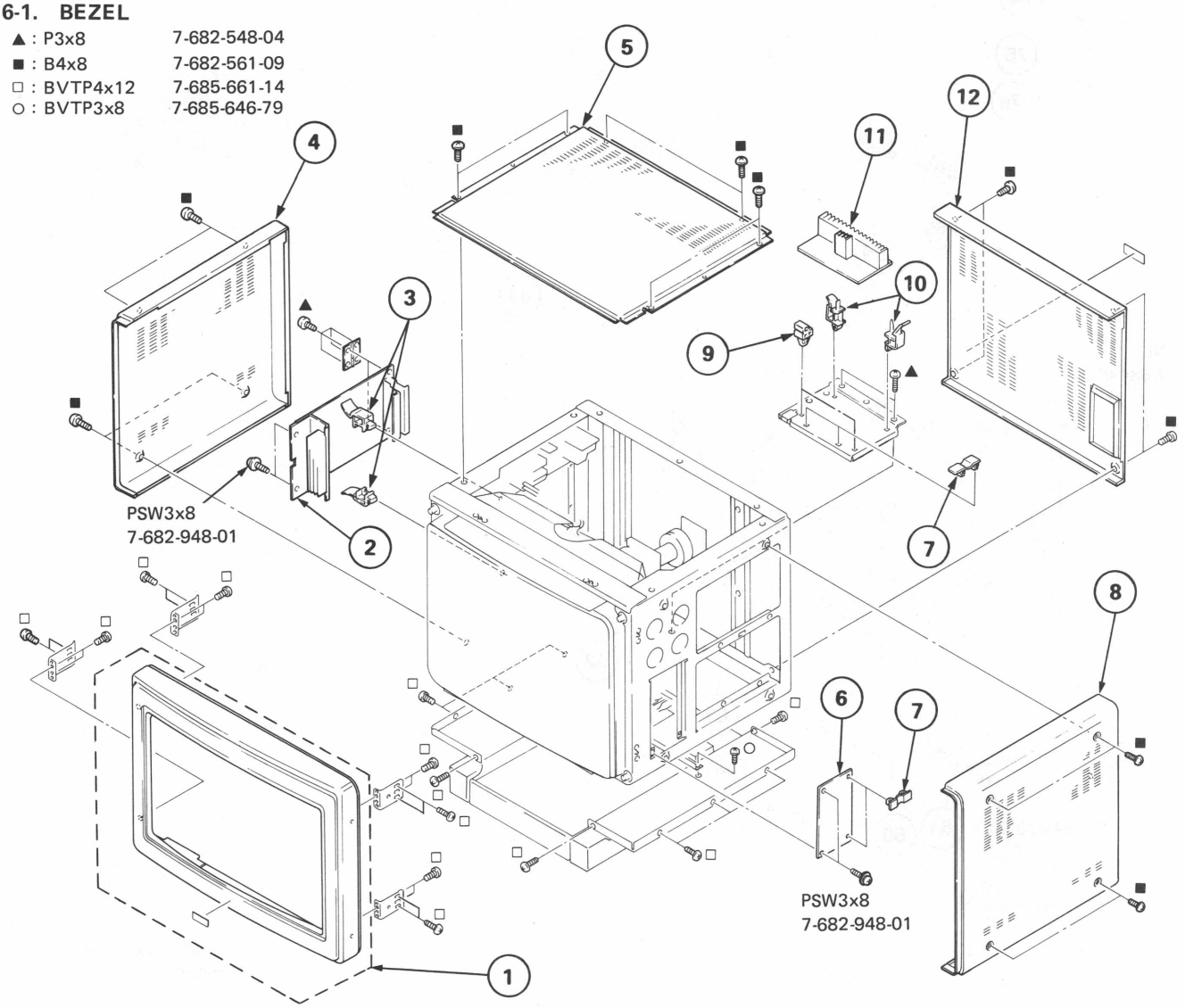

No.	Part No.	Description	Remark
1	X-4378-936-1	BEZEL ASSY	
2	*A-1345-835-A	E BOARD, COMPLETE	
3	*4-321-929-00	HOLDER, PC BOARD	
4	*4-393-002-01	CABINET (L)	
5	*4-393-003-01	CABINET (T)	
6	*A-1235-012-A	R BOARD, COMPLETE	
7	*4-313-732-01	CLIP, HINGE, CIRCUIT BOARD	
8	*4-393-001-01	CABINET (R)	
9	*3-659-682-01	HOLDER, PC BOARD	
10	*3-703-141-00	HOLDER, PCB	
11	*1-626-504-11	GA BOARD	
12	*4-393-004-01	COVER, REAR	

6-2. PICTURE TUBE

▲: P3x8 7-682-548-04
○: BVTP3x8 7-685-646-79

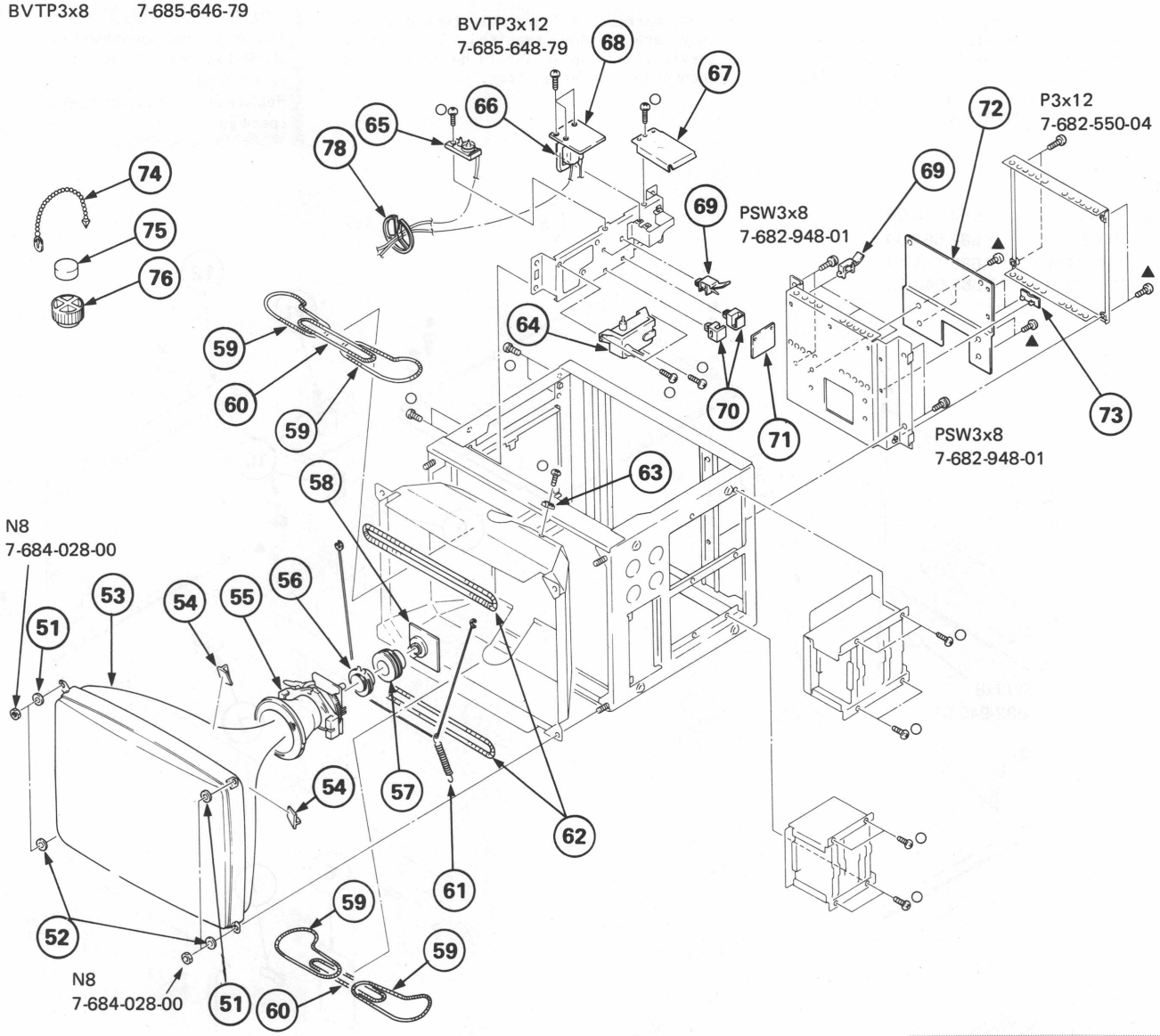

The components identified by shading and mark ⚠ are critical for safety.
Replace only with part number specified.

No.	Part No.	Description	Remark
51	*4-318-059-00	WASHER, PICTURE TUBE	
52	4-390-485-01	WASHER, PICTURE TUBE	
53	⚠8-738-452-75	PICTURE TUBE (M72KCF20X)	
54	3-703-003-00	SPACER, DY	
55	⚠1-451-326-11	DEFLECTION YOKE (SY-181)	
56	⚠1-452-261-22	PICTURE TUBE NECK ASSY (362)	
57	⚠1-452-117-31	PICTURE TUBE NECK ASSY	
58	*1-617-465-11	CB BOARD	
59	1-426-293-11	COIL, LANDING CORRECTION (B)	
60	1-426-292-11	COIL, LANDING CORRECTION (A)	
61	4-369-318-00	SPRING, TENSION	
62	⚠1-426-294-11	COIL, DEMAGNETIZATION	
63	*4-309-624-00	TERMINAL, EARTH	
64	⚠1-453-107-11	HIGH-VOLTAGE BLOCK (DCT BLOCK)	
65	⚠1-230-618-11	RESISTOR ASSY, HIGH-VOLTAGE	
66	⚠1-439-381-21	TRANSFORMER ASSY, FLYBACK	
67	*4-383-317-01	COVER, FBT	
68	*1-617-480-11	P BOARD	
69	*3-703-141-00	HOLDER, PCB	
70	*3-701-903-00	HOLDER, PC BOARD	
71	*1-610-380-12	K BOARD	
72	*A-1335-009-A	CA BOARD, COMPLETE	
73	*4-313-732-00	CLIP, HINGE, CIRCUIT BOARD	
74	4-308-870-00	CLIP, LEAD WIRE	
75	1-452-032-00	MAGNET, DISK; 10MM ø	
76	1-452-094-00	MAGNET, ROTATABLE DISK; 15MM ø	
78	*3-704-372-01	HOLDER, HV CABLE	

6-3. DRAWER BLOCK

● : P3x6 7-682-547-09
○ : BVTP3x8 7-685-646-79

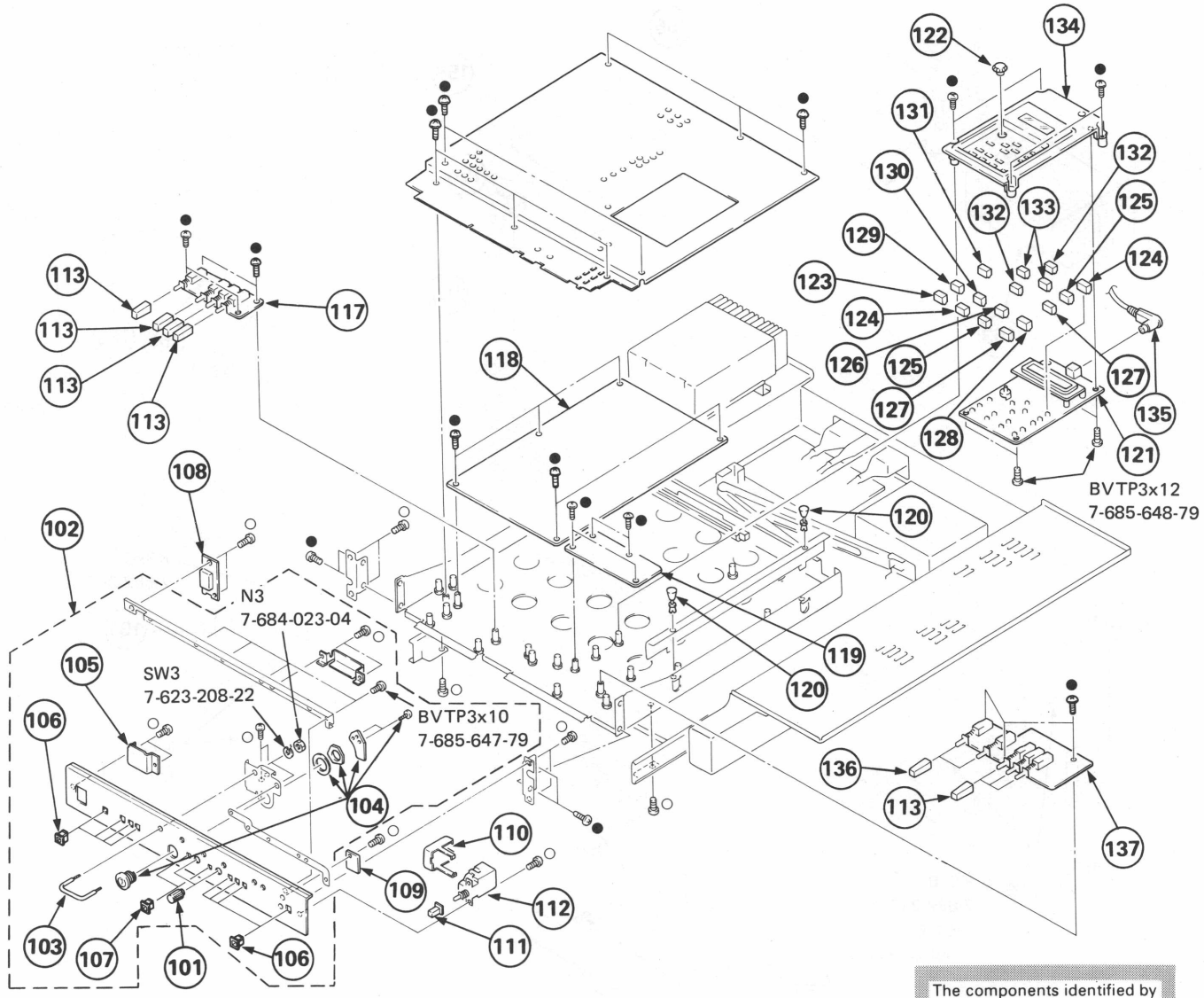

The components identified by shading and mark ⚠ are critical for safety.
Replace only with part number specified.

No.	Part No.	Description	Remark
101	4-378-916-01	KNOB, VOL	
102	X-4378-937-1	PANEL ASSY, CONTROL	103-107
103	4-335-904-02	HANDLE (S)	
104	4-378-917-01	LOCK, CYLINDER	
105	4-353-701-00	COVER, LAMP	
106	4-379-423-11	ESCUTCHEON (A)	
107	4-379-424-11	ESCUTCHEON (B)	
108	*1-629-774-11	L BOARD	
109	*1-629-771-11	YA BOARD	
110	4-373-038-01	COVER, SWITCH, POWER	
111	4-378-925-11	BUTTON (A)	
112	⚠1-554-967-12	SWITCH, PUSH (AC POWER)(1 KEY)	
113	4-374-839-02	BUTTON (A)	
117	*1-627-688-11	JB BOARD	
118	*A-1345-836-A	D BOARD, COMPLETE	
119	*1-619-842-11	W BOARD	
120	3-703-356-00	RIVET, T TYPE	
121	*A-1394-176-A	N BOARD, COMPLETE	
122	4-383-316-01	KNOB (B), VOLUME	
123	X-4378-914-1	PLATE (IN) ASSY, SWITCH	
124	X-4378-915-1	PLATE (R) ASSY, SWITCH	
125	X-4378-916-1	PLATE (G) ASSY, SWITCH	
126	X-4378-913-1	PLATE (FOR) ASSY, SWITCH	
127	X-4378-917-1	PLATE (B) ASSY, SWITCH	
128	X-4378-909-1	PLATE (CUR) ASSY, SWITCH	
129	X-4378-911-1	PLATE (MODE) ASSY, SWITCH	
130	X-4378-912-1	PLATE (BACK) ASSY, SWITCH	
131	X-4378-910-1	PLATE (APER) ASSY, SWITCH	
132	X-4378-918-1	PLATE (V) ASSY, SWITCH	
133	X-4378-919-1	PLATE (H) ASSY, SWITCH	
134	X-4378-922-1	COVER (N) ASSY	
135	*1-559-134-11	CONNECTOR ASSY	
136	4-378-903-11	BUTTON (B)	
137	*1-626-506-11	JA BOARD	

6-4. BOTTOM CHASSIS

○: BVTP3x8 7-685-646-79
□: BVTP4x12 7-685-661-14

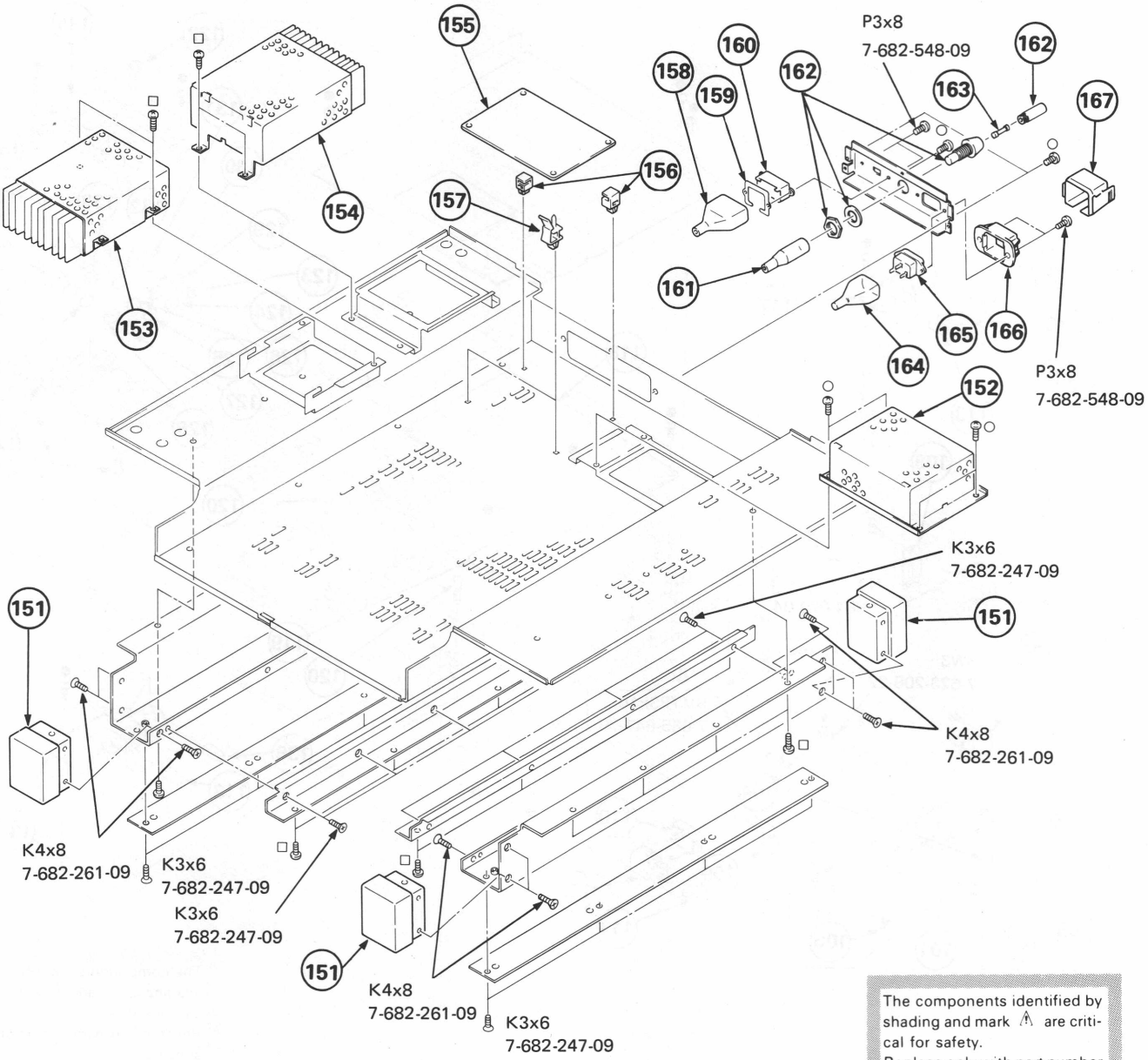

The components identified by shading and mark ⚠ are critical for safety.
Replace only with part number specified.

No.	Part No.	Description	Remark
151	*4-390-488-01	CAP	
152	⚠1-413-227-11	SWITCHING REGULATOR (CR-15EN)	
153	⚠1-413-287-12	REGULATOR, SWITCHING (TK-18)	
154	⚠1-413-251-13	SWITCHING REGULATOR (SF-11)	
155	*1-619-844-11	F BOARD	
156	*3-701-903-00	HOLDER, PC BOARD	
157	*3-703-141-00	HOLDER, PCB	
158	*4-371-879-02	COVER, AC SELECT	
159	*4-379-409-01	NUT, PLATE	
160	⚠1-554-913-11	SWITCH, SLIDE (VOLTAGE CHANGE)	
161	*4-371-803-01	COVER, FUSE HOLDER	
162	1-533-148-00	HOLDER, FUSE	
163	⚠1-532-350-11	FUSE, TIME-LAG 4A/250V	
164	4-601-466-11	COVER, 3P INLET	
165	⚠1-509-546-11	3P INLET	
166	*2-990-241-01	HOLDER (A), PLUG	
167	*2-990-242-01	HOLDER (B), PLUG	

6-5. SIGNAL BLOCK

● : P3x6 7-682-547-09
○ : BVTP3x8 7-685-646-79

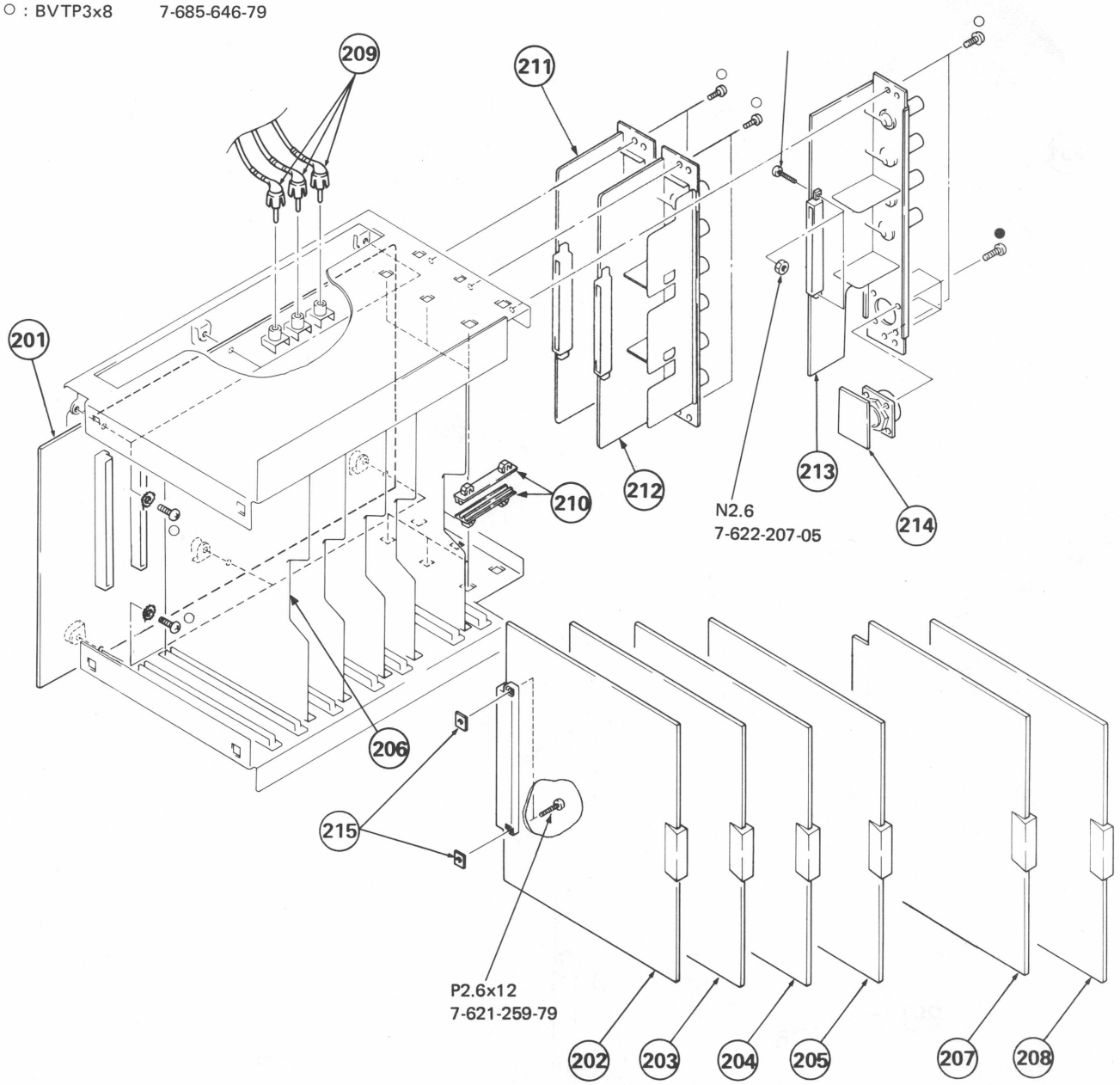

No.	Part No.	Description	Remark
201	*1-626-497-11	BN BOARD	
202	*A-1296-453-A	BG BOARD, COMPLETE	
203	*A-1296-452-A	BF BOARD, COMPLETE	
204	*A-1296-451-A	BE BOARD, COMPLETE	
205	*A-1135-525-A	BD BOARD, COMPLETE	
206	*4-378-928-01	PLATE, SHIELD	
207	*A-1296-450-A	BB BOARD, COMPLETE	
208	*A-1135-524-A	BA BOARD, COMPLETE	
209	*1-557-152-81	CABLE, PIN	
210	*3-680-613-11	SUPPORT, PC BOARD	
211	*A-1275-090-A	QB BOARD, COMPLETE	
212	*A-1275-089-A	QA BOARD, COMPLETE	
213	*A-1275-069-A	QC BOARD, COMPLETE	
214	*1-617-479-11	QD BOARD	
215	4-378-915-01	NUT (M2.6), PLATE	

6-6. Z BLOCK

○ : BVTP3x8 7-685-646-79

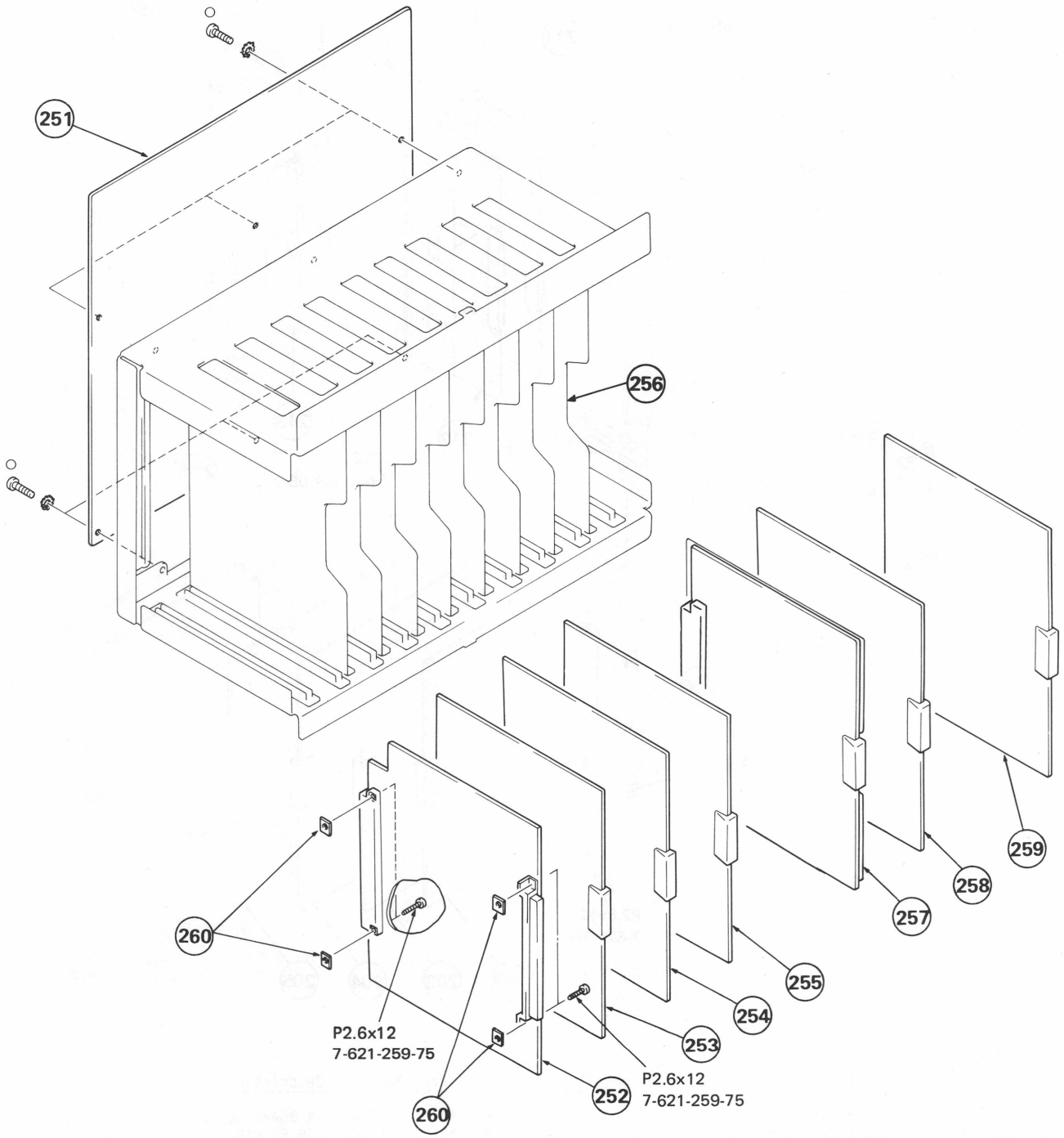

No.	Part No.	Description	Remark
251	*1-626-502-11	ZN BOARD	
252	*A-1389-709-A	XA BOARD, COMPLETE	
253	*A-1345-652-A	DC BOARD, COMPLETE	
254	*A-1345-651-A	DB BOARD, COMPLETE	
255	*A-1345-650-A	DA BOARD, COMPLETE	
256	*4-378-928-01	PLATE, SHIELD	
257	*A-1394-168-A	ZD BOARD, COMPLETE	
258	*A-1394-143-A	ZC BOARD, COMPLETE	
259	*A-1394-142-A	ZA BOARD, COMPLETE	
260	4-378-915-01	NUT (M2.6), PLATE	

SECTION 7
ELECTRICAL PARTS LIST

BN **BA**

NOTE:

The components identified by shading and mark ⚠ are critical for safety.
Replace only with part number specified.

- Items marked " * " are not stocked since they are seldom required for routine service. Some delay should be anticipated when ordering these items.
- All variable and adjustable resistors have characteristic curve B, unless otherwise noted.

RESISTORS
- All resistors are in ohms
- F : nonflammable

When indicating parts by reference number, please include the board name.

CAPACITORS
- MF : μF, PF : μμF

COILS
- MMH : mH, UH : μH

- The components identified by ⊠ in this manual have been carefully factory-selected for each set in order to satisfy regulations regarding X-ray radiation. Should replacement be required, replace only with the value originally used.

Ref.No.	Part No.	Description	Remark
	*1-626-497-11	BN BOARD	
		********	
	1-507-751-00	JACK, PIN 1P	
	4-378-915-01	NUT (M2.6), PLATE	
		CONNECTOR	
BN1	*1-562-768-11	RECEPTACLE, MULTI CONNECTOR 64P	
BN2	*1-562-768-11	RECEPTACLE, MULTI CONNECTOR 64P	
BN3	*1-562-768-11	RECEPTACLE, MULTI CONNECTOR 64P	
BN4	*1-562-768-11	RECEPTACLE, MULTI CONNECTOR 64P	
BN5	*1-562-768-11	RECEPTACLE, MULTI CONNECTOR 64P	
BN6	*1-562-768-11	RECEPTACLE, MULTI CONNECTOR 64P	
BN7	*1-562-768-11	RECEPTACLE, MULTI CONNECTOR 64P	
BN8	*1-566-045-11	PIN, CONNECTOR 6P	
BN9	*1-566-046-11	PIN, CONNECTOR 7P	
BN10	*1-566-047-11	PIN, CONNECTOR 8P	
BN11	*1-566-054-11	PIN, CONNECTOR 2P	
BN12	*1-566-057-11	PIN, CONNECTOR 5P	
BN13	*1-566-060-11	PIN, CONNECTOR 8P	
BN14	*1-566-056-11	PIN, CONNECTOR 4P	
BN15	*1-566-058-11	PIN, CONNECTOR 6P	
BN16	*1-566-062-11	PIN, CONNECTOR 10P	
BN17	*1-566-054-11	PIN, CONNECTOR 2P	
BN18	*1-566-055-11	PIN, CONNECTOR 3P	
BN19	*1-566-047-11	PIN, CONNECTOR 8P	
BN20	*1-566-047-11	PIN, CONNECTOR 8P	
BN21	*1-566-058-11	PIN, CONNECTOR 6P	
BN23	*1-566-055-11	PIN, CONNECTOR 3P	
BN24	*1-566-056-11	PIN, CONNECTOR 4P	
	*A-1135-524-A	BA BOARD, COMPLETE	
		******************	
	*4-353-708-00	HOOK, FINGER	
		CONNECTOR	
BA1	*1-562-729-11	CONNECTOR, MULTI 64P	
	4-378-915-01	NUT (M2.6), PLATE; BA1	
BA2	*1-562-454-11	CONNECTOR 15P	
BA3	*1-562-454-11	CONNECTOR 15P	
BA4	*1-562-455-11	CONNECTOR 22P	
		CAPACITOR	
C101	1-126-233-11	ELECT 22MF 20% 25V	
C102	1-101-004-00	CERAMIC 0.01MF 50V	
C103	1-101-004-00	CERAMIC 0.01MF 50V	
C104	1-126-233-11	ELECT 22MF 20% 25V	
C105	1-101-004-00	CERAMIC 0.01MF 50V	
C106	1-126-233-11	ELECT 22MF 20% 25V	
C107	1-101-004-00	CERAMIC 0.01MF 50V	
C108	1-101-004-00	CERAMIC 0.01MF 50V	
C109	1-126-233-11	ELECT 22MF 20% 25V	
C110	1-126-233-11	ELECT 22MF 20% 25V	
C111	1-101-004-00	CERAMIC 0.01MF 50V	
C114	1-101-004-00	CERAMIC 0.01MF 50V	
C115	1-126-233-11	ELECT 22MF 20% 25V	
C116	1-101-004-00	CERAMIC 0.01MF 50V	
C117	1-101-004-00	CERAMIC 0.01MF 50V	
C120	1-101-004-00	CERAMIC 0.01MF 50V	
C121	1-126-233-11	ELECT 22MF 20% 25V	
C122	1-126-233-11	ELECT 22MF 20% 25V	
C123	1-101-004-00	CERAMIC 0.01MF 50V	
C124	1-101-004-00	CERAMIC 0.01MF 50V	
C125	1-126-233-11	ELECT 22MF 20% 25V	
C126	1-101-004-00	CERAMIC 0.01MF 50V	
C128	1-126-233-11	ELECT 22MF 20% 25V	
C201	1-124-646-91	ELECT 22MF 20% 16V	
C203	1-124-631-11	ELECT 47MF 20% 16V	
C205	1-126-233-11	ELECT 22MF 20% 25V	
C207	1-126-233-11	ELECT 22MF 20% 25V	
C208	1-126-233-11	ELECT 22MF 20% 25V	
C209	1-126-233-11	ELECT 22MF 20% 25V	
C210	1-126-233-11	ELECT 22MF 20% 25V	
C211	1-126-233-11	ELECT 22MF 20% 25V	
C212	1-101-004-00	CERAMIC 0.01MF 50V	
C213	1-101-004-00	CERAMIC 0.01MF 50V	
C214	1-126-233-11	ELECT 22MF 20% 25V	
C215	1-101-004-00	CERAMIC 0.01MF 50V	
C217	1-126-233-11	ELECT 22MF 20% 25V	
C219	1-126-233-11	ELECT 22MF 20% 25V	
C220	1-126-233-11	ELECT 22MF 20% 25V	
C221	1-101-004-00	CERAMIC 0.01MF 50V	
C222	1-101-004-00	CERAMIC 0.01MF 50V	
C223	1-126-233-11	ELECT 22MF 20% 25V	
C224	1-124-631-11	ELECT 47MF 20% 16V	
C301	1-101-004-00	CERAMIC 0.01MF 50V	
C302	1-126-233-11	ELECT 22MF 20% 25V	
C303	1-101-004-00	CERAMIC 0.01MF 50V	
C304	1-126-233-11	ELECT 22MF 20% 25V	
C305	1-124-499-11	ELECT 1MF 20% 50V	
C306	1-126-233-11	ELECT 22MF 20% 25V	
C307	1-126-233-11	ELECT 22MF 20% 25V	
C308	1-101-004-00	CERAMIC 0.01MF 50V	
C309	1-101-004-00	CERAMIC 0.01MF 50V	
C310	1-126-101-11	ELECT 100MF 20% 16V	
C311	1-126-101-11	ELECT 100MF 20% 16V	
C312	1-126-233-11	ELECT 22MF 20% 25V	
C313	1-126-233-11	ELECT 22MF 20% 25V	
C314	1-101-004-00	CERAMIC 0.01MF 50V	
C315	1-101-004-00	CERAMIC 0.01MF 50V	

BA

Ref.No.	Part No.	Description				Remark
C316	1-124-120-11	ELECT	220MF	20%	25V	
C317	1-124-120-11	ELECT	220MF	20%	25V	
C318	1-124-477-11	ELECT	47MF	20%	25V	
C319	1-124-477-11	ELECT	47MF	20%	25V	
C320	1-101-004-00	CERAMIC	0.01MF		50V	
C321	1-126-233-11	ELECT	22MF	20%	25V	
C322	1-101-004-00	CERAMIC	0.01MF		50V	
C323	1-126-233-11	ELECT	22MF	20%	25V	
C324	1-124-499-11	ELECT	1MF	20%	50V	
C325	1-126-233-11	ELECT	22MF	20%	25V	
C326	1-126-233-11	ELECT	22MF	20%	25V	
C327	1-101-004-00	CERAMIC	0.01MF		50V	
C328	1-126-233-11	ELECT	22MF	20%	25V	
C329	1-101-004-00	CERAMIC	0.01MF		50V	
C330	1-126-233-11	ELECT	22MF	20%	25V	
C331	1-124-499-11	ELECT	1MF	20%	50V	
C332	1-126-233-11	ELECT	22MF	20%	25V	
C333	1-126-233-11	ELECT	22MF	20%	25V	
C334	1-124-499-11	ELECT	1MF	20%	50V	
C335	1-124-499-11	ELECT	1MF	20%	50V	
C336	1-124-499-11	ELECT	1MF	20%	50V	
C337	1-124-499-11	ELECT	1MF	20%	50V	
C338	1-124-499-11	ELECT	1MF	20%	50V	
C339	1-124-499-11	ELECT	1MF	20%	50V	
C340	1-101-004-00	CERAMIC	0.01MF		50V	

DIODE

D101	8-719-110-41	DIODE RD15ES-B2
D200	8-719-110-36	DIODE RD13ES-B2
D201	8-719-911-19	DIODE 1SS119
D203	8-719-911-19	DIODE 1SS119
D205	8-719-110-41	DIODE RD15ES-B2
D207	8-719-911-19	DIODE 1SS119
D208	8-719-911-19	DIODE 1SS119
D209	8-719-911-19	DIODE 1SS119
D210	8-719-911-19	DIODE 1SS119
D211	8-719-911-19	DIODE 1SS119
D212	8-719-911-19	DIODE 1SS119
D213	8-719-911-19	DIODE 1SS119
D214	8-719-911-19	DIODE 1SS119
D215	8-719-911-19	DIODE 1SS119
D216	8-719-911-19	DIODE 1SS119
D301	8-719-971-20	DIODE ERC38-06
D302	8-719-971-20	DIODE ERC38-06
D305	8-719-911-19	DIODE 1SS119
D306	8-719-911-19	DIODE 1SS119
D307	8-719-911-19	DIODE 1SS119
D308	8-719-911-19	DIODE 1SS119

IC

IC101	8-759-800-81	IC LA7016
IC102	8-759-800-81	IC LA7016
IC103	8-759-800-81	IC LA7016
IC202	8-759-800-81	IC LA7016
IC203	8-759-250-24	IC TC5024BP
IC204	8-759-250-25	IC TC5025BP
IC301	8-759-400-29	IC AN78L04
IC303	8-759-982-46	IC RC79L08A
IC305	8-759-602-66	IC M5230L-A
IC306	8-759-602-66	IC M5230L-A
IC307	8-759-602-66	IC M5230L-A

Ref.No.	Part No.	Description	Remark

TRANSISTOR

Q101	8-729-103-19	TRANSISTOR 2SA1206-K1
Q102	8-729-103-19	TRANSISTOR 2SA1206-K1
Q103	8-729-103-19	TRANSISTOR 2SA1206-K1
Q200	8-729-119-78	TRANSISTOR 2SC2785-HFE
Q201	8-729-119-76	TRANSISTOR 2SA1175-HFE
Q202	8-729-119-76	TRANSISTOR 2SA1175-HFE
Q203	8-729-103-19	TRANSISTOR 2SA1206-K1
Q204	8-729-378-84	TRANSISTOR 2SD788
Q301	8-729-378-84	TRANSISTOR 2SD788
Q302	8-729-373-92	TRANSISTOR 2SB739
Q303	8-729-378-84	TRANSISTOR 2SD788
Q304	8-729-373-92	TRANSISTOR 2SB739
Q305	8-729-119-78	TRANSISTOR 2SC2785-HFE
Q306	8-729-378-84	TRANSISTOR 2SD788
Q307	8-729-373-92	TRANSISTOR 2SB739

RESISTOR

R100	1-249-405-11	CARBON	100	5%	1/4W
R101	1-249-437-11	CARBON	47K	5%	1/4W
R102	1-249-437-11	CARBON	47K	5%	1/4W
R103	1-249-437-11	CARBON	47K	5%	1/4W
R104	1-249-405-11	CARBON	100	5%	1/4W
R105	1-249-405-11	CARBON	100	5%	1/4W
R106	1-249-405-11	CARBON	100	5%	1/4W
R107	1-249-405-11	CARBON	100	5%	1/4W
R108	1-249-421-11	CARBON	2.2K	5%	1/4W
R109	1-215-393-00	METAL	68	1%	1/6W
R110	1-249-405-11	CARBON	100	5%	1/4W
R111	1-249-405-11	CARBON	100	5%	1/4W
R112	1-249-405-11	CARBON	100	5%	1/4W
R113	1-249-405-11	CARBON	100	5%	1/4W
R114	1-249-405-11	CARBON	100	5%	1/4W
R115	1-249-421-11	CARBON	2.2K	5%	1/4W
R116	1-249-405-11	CARBON	100	5%	1/4W
R117	1-249-405-11	CARBON	100	5%	1/4W
R118	1-215-393-00	METAL	68	1%	1/6W
R119	1-249-437-11	CARBON	47K	5%	1/4W
R120	1-249-437-11	CARBON	47K	5%	1/4W
R121	1-249-437-11	CARBON	47K	5%	1/4W
R122	1-249-405-11	CARBON	100	5%	1/4W
R123	1-249-405-11	CARBON	100	5%	1/4W
R124	1-249-435-11	CARBON	33K	5%	1/4W
R125	1-249-405-11	CARBON	100	5%	1/4W
R126	1-249-427-11	CARBON	6.8K	5%	1/4W
R127	1-249-405-11	CARBON	100	5%	1/4W
R128	1-249-421-11	CARBON	2.2K	5%	1/4W
R129	1-215-393-00	METAL	68	1%	1/6W
R130	1-249-405-11	CARBON	100	5%	1/4W
R201	1-249-437-11	CARBON	47K	5%	1/4W
R203	1-249-465-11	CARBON	47K	5%	1/4W
R205	1-249-465-11	CARBON	47K	5%	1/4W
R207	1-247-901-11	CARBON	820K	5%	1/4W
R209	1-247-901-11	CARBON	820K	5%	1/4W
R211	1-249-405-11	CARBON	100	5%	1/4W
R213	1-249-405-11	CARBON	100	5%	1/4W
R215	1-249-405-11	CARBON	100	5%	1/4W
R219	1-249-405-11	CARBON	100	5%	1/4W
R220	1-249-405-11	CARBON	100	5%	1/4W
R222	1-249-421-11	CARBON	2.2K	5%	1/4W
R223	1-249-405-11	CARBON	100	5%	1/4W
R224	1-249-405-11	CARBON	100	5%	1/4W
R225	1-249-405-11	CARBON	100	5%	1/4W

Ref.No.	Part No.	Description				Remark
R226	1-249-421-11	CARBON	2.2K	5%	1/4W	
R227	1-215-393-00	METAL	68	1%	1/6W	
R228	1-215-393-00	METAL	68	1%	1/6W	
R229	1-249-405-11	CARBON	100	5%	1/4W	
R230	1-249-417-11	CARBON	1K	5%	1/4W	
R231	1-249-427-11	CARBON	6.8K	5%	1/4W	
R232	1-249-405-11	CARBON	100	5%	1/4W	
R233	1-249-435-11	CARBON	33K	5%	1/4W	
R234	1-249-421-11	CARBON	2.2K	5%	1/4W	
R235	1-249-417-11	CARBON	1K	5%	1/4W	
R236	1-215-393-00	METAL	68	1%	1/6W	
R237	1-249-405-11	CARBON	100	5%	1/4W	
R238	1-249-437-11	CARBON	47K	5%	1/4W	
R239	1-249-437-11	CARBON	47K	5%	1/4W	
R240	1-249-437-11	CARBON	47K	5%	1/4W	
R241	1-249-437-11	CARBON	47K	5%	1/4W	
R242	1-249-437-11	CARBON	47K	5%	1/4W	
R243	1-249-427-11	CARBON	6.8K	5%	1/4W	
R244	1-249-427-11	CARBON	6.8K	5%	1/4W	
R245	1-249-427-11	CARBON	6.8K	5%	1/4W	
R246	1-249-427-11	CARBON	6.8K	5%	1/4W	
R247	1-249-427-11	CARBON	6.8K	5%	1/4W	
R248	1-249-427-11	CARBON	6.8K	5%	1/4W	
R249	1-249-405-11	CARBON	100	5%	1/4W	
R250	1-249-405-11	CARBON	100	5%	1/4W	
R251	1-249-427-11	CARBON	6.8K	5%	1/4W	
R252	1-249-427-11	CARBON	6.8K	5%	1/4W	
R253	1-249-427-11	CARBON	6.8K	5%	1/4W	
R254	1-249-427-11	CARBON	6.8K	5%	1/4W	
R255	1-249-437-11	CARBON	47K	5%	1/4W	
R256	1-249-437-11	CARBON	47K	5%	1/4W	
R257	1-249-437-11	CARBON	47K	5%	1/4W	
R258	1-249-437-11	CARBON	47K	5%	1/4W	
R259	1-249-393-11	CARBON	10	5%	1/4W	
R260	1-249-405-11	CARBON	100	5%	1/4W	
R261	1-247-901-11	CARBON	820K	5%	1/4W	
R263	1-249-441-11	CARBON	100K	5%	1/4W	
R301	1-215-447-00	METAL	12K	1%	1/6W	
R302	1-215-442-00	METAL	7.5K	1%	1/6W	
R303	1-215-427-00	METAL	1.8K	1%	1/6W	
R304	1-215-447-00	METAL	12K	1%	1/6W	
R305	1-247-903-00	CARBON	1M	5%	1/4W	
R306	1-215-447-00	METAL	12K	1%	1/6W	
R307	1-215-447-00	METAL	12K	1%	1/6W	
R308	1-215-442-00	METAL	7.5K	1%	1/6W	
R309	1-215-427-00	METAL	1.8K	1%	1/6W	
R310	1-247-903-00	CARBON	1M	5%	1/4W	
R311	1-249-441-11	CARBON	100K	5%	1/4W	
R312	1-215-447-00	METAL	12K	1%	1/6W	
R313	1-215-442-00	METAL	7.5K	1%	1/6W	
R314	1-215-427-00	METAL	1.8K	1%	1/6W	
R315	1-215-447-00	METAL	12K	1%	1/6W	
R316	1-247-903-00	CARBON	1M	5%	1/4W	
R317	1-249-429-11	CARBON	10K	5%	1/4W	
R318	1-249-405-11	CARBON	100	5%	1/4W	

SWITCH

S1	*1-561-724-00	SOCKET, CONNECTOR 2P
S1	*1-564-431-11	POST, CONNECTOR 3P

****

*A-1135-525-A BD BOARD, COMPLETE
****

*4-353-708-00 HOOK, FINGER
4-378-915-01 NUT (M2.6), PLATE

Ref.No.	Part No.	Description				Remark
		CONNECTOR				
BD1	*1-562-729-11	CONNECTOR, MULTI 64P				
		CAPACITOR				
C001	1-123-382-00	ELECT	3.3MF	20%	50V	
C002	1-123-382-00	ELECT	3.3MF	20%	50V	
C003	1-123-382-00	ELECT	3.3MF	20%	50V	
C004	1-123-382-00	ELECT	3.3MF	20%	50V	
C005	1-123-382-00	ELECT	3.3MF	20%	50V	
C006	1-123-382-00	ELECT	3.3MF	20%	50V	
C009	1-101-004-00	CERAMIC	0.01MF		50V	
C011	1-123-334-00	ELECT	220MF	20%	25V	
C012	1-123-332-00	ELECT	47MF	20%	25V	
C013	1-101-004-00	CERAMIC	0.01MF		50V	
C014	1-101-004-00	CERAMIC	0.01MF		50V	
C016	1-123-334-00	ELECT	220MF	20%	25V	
C017	1-123-332-00	ELECT	47MF	20%	25V	
C018	1-101-004-00	CERAMIC	0.01MF		50V	
C019	1-101-004-00	CERAMIC	0.01MF		50V	
C101	1-123-333-00	ELECT	100MF	20%	16V	
C102	1-101-004-00	CERAMIC	0.01MF		50V	
C103	1-123-333-00	ELECT	100MF	20%	16V	
C104	1-101-004-00	CERAMIC	0.01MF		50V	
C105	1-102-942-00	CERAMIC	5PF	1PF	50V	
C106	1-124-963-11	ELECT	33MF	20%	16V	
C107	1-136-173-00	FILM	0.47MF	5%	50V	
C108	1-136-173-00	FILM	0.47MF	5%	50V	
C109	1-101-004-00	CERAMIC	0.01MF		50V	
C110	1-123-330-00	ELECT	22MF	20%	25V	
C111	1-123-330-00	ELECT	22MF	20%	25V	
C112	1-123-330-00	ELECT	22MF	20%	25V	
C113	1-123-330-00	ELECT	22MF	20%	25V	
C114	1-124-963-11	ELECT	33MF	20%	16V	
C115	1-101-004-00	CERAMIC	0.01MF		50V	
C116	1-124-963-11	ELECT	33MF	20%	16V	
C117	1-101-004-00	CERAMIC	0.01MF		50V	
C118	1-124-963-11	ELECT	33MF	20%	16V	
C119	1-136-169-00	FILM	0.22MF	5%	50V	
C120	1-101-004-00	CERAMIC	0.01MF		50V	
C121	1-136-165-00	FILM	0.1MF	5%	50V	
C122	1-101-004-00	CERAMIC	0.01MF		50V	
C123	1-102-942-00	CERAMIC	5PF	1PF	50V	
C124	1-123-330-00	ELECT	22MF	20%	25V	
C125	1-123-330-00	ELECT	22MF	20%	25V	
C126	1-136-173-00	FILM	0.47MF	5%	50V	
C127	1-101-004-00	CERAMIC	0.01MF		50V	
C129	1-101-004-00	CERAMIC	0.01MF		50V	
C131	1-101-004-00	CERAMIC	0.01MF		50V	
C132	1-101-004-00	CERAMIC	0.01MF		50V	
C133	1-101-004-00	CERAMIC	0.01MF		50V	
C134	1-102-963-00	CERAMIC	33PF	5%	50V	
C135	1-101-004-00	CERAMIC	0.01MF		50V	
C137	1-102-951-00	CERAMIC	15PF	5%	50V	
C138	1-101-004-00	CERAMIC	0.01MF		50V	
C139	1-101-004-00	CERAMIC	0.01MF		50V	
C201	1-123-333-00	ELECT	100MF	20%	16V	
C202	1-101-004-00	CERAMIC	0.01MF		50V	
C203	1-123-333-00	ELECT	100MF	20%	16V	
C204	1-101-004-00	CERAMIC	0.01MF		50V	
C205	1-102-942-00	CERAMIC	5PF	1PF	50V	
C206	1-124-963-11	ELECT	33MF	20%	16V	
C207	1-136-173-00	FILM	0.47MF	5%	50V	

BD

Ref.No.	Part No.	Description			Remark
C208	1-136-173-00	FILM	0.47MF	5%	50V
C209	1-101-004-00	CERAMIC	0.01MF		50V
C210	1-123-330-00	ELECT	22MF	20%	25V
C211	1-123-330-00	ELECT	22MF	20%	25V
C212	1-123-330-00	ELECT	22MF	20%	25V
C213	1-123-330-00	ELECT	22MF	20%	25V
C214	1-124-963-11	ELECT	33MF	20%	16V
C215	1-101-004-00	CERAMIC	0.01MF		50V
C216	1-124-963-11	ELECT	33MF	20%	16V
C217	1-101-004-00	CERAMIC	0.01MF		50V
C218	1-124-963-11	ELECT	33MF	20%	16V
C219	1-136-169-00	FILM	0.22MF	5%	50V
C220	1-101-004-00	CERAMIC	0.01MF		50V
C221	1-136-165-00	FILM	0.1MF	5%	50V
C222	1-101-004-00	CERAMIC	0.01MF		50V
C223	1-102-942-00	CERAMIC	5PF	1PF	50V
C224	1-123-330-00	ELECT	22MF	20%	25V
C225	1-123-330-00	ELECT	22MF	20%	25V
C226	1-136-173-00	FILM	0.47MF	5%	50V
C227	1-101-004-00	CERAMIC	0.01MF		50V
C229	1-101-004-00	CERAMIC	0.01MF		50V
C231	1-101-004-00	CERAMIC	0.01MF		50V
C232	1-101-004-00	CERAMIC	0.01MF		50V
C233	1-101-004-00	CERAMIC	0.01MF		50V
C234	1-102-963-00	CERAMIC	33PF	5%	50V
C235	1-101-004-00	CERAMIC	0.01MF		50V
C237	1-102-951-00	CERAMIC	15PF	5%	50V
C238	1-101-004-00	CERAMIC	0.01MF		50V
C239	1-101-004-00	CERAMIC	0.01MF		50V
C301	1-123-333-00	ELECT	100MF	20%	16V
C302	1-101-004-00	CERAMIC	0.01MF		50V
C303	1-123-333-00	ELECT	100MF	20%	16V
C304	1-101-004-00	CERAMIC	0.01MF		50V
C305	1-102-942-00	CERAMIC	5PF	1PF	50V
C306	1-124-963-11	ELECT	33MF	20%	16V
C307	1-136-173-00	FILM	0.47MF	5%	50V
C308	1-136-173-00	FILM	0.47MF	5%	50V
C309	1-101-004-00	CERAMIC	0.01MF		50V
C310	1-123-330-00	ELECT	22MF	20%	25V
C311	1-123-330-00	ELECT	22MF	20%	25V
C312	1-123-330-00	ELECT	22MF	20%	25V
C313	1-123-330-00	ELECT	22MF	20%	25V
C314	1-124-963-11	ELECT	33MF	20%	16V
C315	1-101-004-00	CERAMIC	0.01MF		50V
C316	1-124-963-11	ELECT	33MF	20%	16V
C317	1-101-004-00	CERAMIC	0.01MF		50V
C318	1-124-963-11	ELECT	33MF	20%	16V
C319	1-136-169-00	FILM	0.22MF	5%	50V
C320	1-101-004-00	CERAMIC	0.01MF		50V
C321	1-136-165-00	FILM	0.1MF	5%	50V
C322	1-101-004-00	CERAMIC	0.01MF		50V
C323	1-102-942-00	CERAMIC	5PF	1PF	50V
C324	1-123-330-00	ELECT	22MF	20%	25V
C325	1-123-330-00	ELECT	22MF	20%	25V
C326	1-136-173-00	FILM	0.47MF	5%	50V
C327	1-101-004-00	CERAMIC	0.01MF		50V
C329	1-101-004-00	CERAMIC	0.01MF		50V
C331	1-101-004-00	CERAMIC	0.01MF		50V
C332	1-101-004-00	CERAMIC	0.01MF		50V
C333	1-101-004-00	CERAMIC	0.01MF		50V
C334	1-102-963-00	CERAMIC	33PF	5%	50V
C335	1-101-004-00	CERAMIC	0.01MF		50V
C337	1-102-951-00	CERAMIC	15PF	5%	50V
C338	1-101-004-00	CERAMIC	0.01MF		50V
C339	1-101-004-00	CERAMIC	0.01MF		50V

Ref.No.	Part No.	Description	Remark
		DIODE	
D001	8-719-911-19	DIODE 1SS119	
D002	8-719-911-19	DIODE 1SS119	
D007	8-719-109-72	DIODE RD3.9ES-B2	
D101	8-719-110-41	DIODE RD15ES-B2	
D102	8-719-911-19	DIODE 1SS119	
D103	8-719-911-19	DIODE 1SS119	
D104	8-719-911-19	DIODE 1SS119	
D106	8-719-911-19	DIODE 1SS119	
D107	8-719-109-89	DIODE RD5.6ES-B2	
D108	8-719-109-89	DIODE RD5.6ES-B2	
D201	8-719-110-41	DIODE RD15ES-B2	
D202	8-719-911-19	DIODE 1SS119	
D203	8-719-911-19	DIODE 1SS119	
D204	8-719-911-19	DIODE 1SS119	
D206	8-719-911-19	DIODE 1SS119	
D207	8-719-109-89	DIODE RD5.6ES-B2	
D208	8-719-109-89	DIODE RD5.6ES-B2	
D301	8-719-110-41	DIODE RD15ES-B2	
D302	8-719-911-19	DIODE 1SS119	
D303	8-719-911-19	DIODE 1SS119	
D304	8-719-911-19	DIODE 1SS119	
D306	8-719-911-19	DIODE 1SS119	
D307	8-719-109-89	DIODE RD5.6ES-B2	
D308	8-719-109-89	DIODE RD5.6ES-B2	
		IC	
IC001	8-759-400-29	IC AN78L04	
IC002	8-759-982-46	IC RC79L08A	
IC101	8-741-131-30	IC BX1313	
IC102	8-759-800-81	IC LA7016	
IC103	8-741-131-50	IC BX1315	
IC104	8-769-401-89	TRANSISTOR TX-429M	
IC105	8-741-131-40	IC BX1314	
IC106	8-741-131-30	IC BX1313	
IC107	8-741-131-30	IC BX1313	
IC201	8-741-131-30	IC BX1313	
IC202	8-759-800-81	IC LA7016	
IC203	8-741-131-50	IC BX1315	
IC204	8-769-401-89	TRANSISTOR TX-429M	
IC205	8-741-131-40	IC BX1314	
IC206	8-741-131-30	IC BX1313	
IC207	8-741-131-30	IC BX1313	
IC301	8-741-131-30	IC BX1313	
IC302	8-759-800-81	IC LA7016	
IC303	8-741-131-50	IC BX1315	
IC304	8-769-401-89	TRANSISTOR TX-429M	
IC305	8-741-131-40	IC BX1314	
IC306	8-741-131-30	IC BX1313	
IC307	8-741-131-30	IC BX1313	
		COIL	
L102	1-408-421-00	INDUCTOR 100UH	
L103	1-408-421-00	INDUCTOR 100UH	
L202	1-408-421-00	INDUCTOR 100UH	
L203	1-408-421-00	INDUCTOR 100UH	
L302	1-408-421-00	INDUCTOR 100UH	
L303	1-408-421-00	INDUCTOR 100UH	

Ref.No.	Part No.	Description	Remark
		TRANSISTOR	
Q101	8-729-105-88	TRANSISTOR 2SC2570A	
Q102	8-729-105-88	TRANSISTOR 2SC2570A	
Q103	8-729-103-19	TRANSISTOR 2SA1206-K1	
Q104	8-729-103-19	TRANSISTOR 2SA1206-K1	
Q105	8-729-105-88	TRANSISTOR 2SC2570A	
Q106	8-729-802-44	TRANSISTOR 2SK125-4	
Q107	8-729-119-76	TRANSISTOR 2SA1175-HFE	
Q108	8-729-119-76	TRANSISTOR 2SA1175-HFE	
Q201	8-729-105-88	TRANSISTOR 2SC2570A	
Q202	8-729-105-88	TRANSISTOR 2SC2570A	
Q203	8-729-103-19	TRANSISTOR 2SA1206-K1	
Q204	8-729-103-19	TRANSISTOR 2SA1206-K1	
Q205	8-729-105-88	TRANSISTOR 2SC2570A	
Q206	8-729-802-44	TRANSISTOR 2SK125-4	
Q207	8-729-119-76	TRANSISTOR 2SA1175-HFE	
Q208	8-729-119-76	TRANSISTOR 2SA1175-HFE	
Q301	8-729-105-88	TRANSISTOR 2SC2570A	
Q302	8-729-105-88	TRANSISTOR 2SC2570A	
Q303	8-729-103-19	TRANSISTOR 2SA1206-K1	
Q304	8-729-103-19	TRANSISTOR 2SA1206-K1	
Q305	8-729-105-88	TRANSISTOR 2SC2570A	
Q306	8-729-802-44	TRANSISTOR 2SK125-4	
Q307	8-729-119-76	TRANSISTOR 2SA1175-HFE	
Q308	8-729-119-76	TRANSISTOR 2SA1175-HFE	
		RESISTOR	
R013	1-247-903-00	CARBON 1M 5% 1/4W	
R101	1-249-405-11	CARBON 100 5% 1/4W	
R102	1-249-433-11	CARBON 22K 5% 1/4W	
R103	1-215-413-00	METAL 470 1% 1/6W	
R104	1-215-429-00	METAL 2.2K 1% 1/6W	
R105	1-215-429-00	METAL 2.2K 1% 1/6W	
R106	1-249-405-11	CARBON 100 5% 1/4W	
R107	1-215-415-00	METAL 560 1% 1/6W	
R108	1-249-405-11	CARBON 100 5% 1/4W	
R109	1-215-411-00	METAL 390 1% 1/6W	
R110	1-249-405-11	CARBON 100 5% 1/4W	
R111	1-215-411-00	METAL 390 1% 1/6W	
R112	1-249-405-11	CARBON 100 5% 1/4W	
R113	1-249-421-11	CARBON 2.2K 5% 1/4W	
R116	1-249-417-11	CARBON 1K 5% 1/4W	
R117	1-247-846-11	CARBON 4.3K 5% 1/4W	
R118	1-249-435-11	CARBON 33K 5% 1/4W	
R122	1-249-405-11	CARBON 100 5% 1/4W	
R123	1-249-429-11	CARBON 10K 5% 1/4W	
R124	1-247-903-00	CARBON 1M 5% 1/4W	
R125	1-249-405-11	CARBON 100 5% 1/4W	
R126	1-215-419-00	METAL 820 1% 1/6W	
R127	1-215-409-00	METAL 330 1% 1/6W	
R128	1-215-429-00	METAL 2.2K 1% 1/6W	
R129	1-215-429-00	METAL 2.2K 1% 1/6W	
R131	1-215-445-00	METAL 10K 1% 1/6W	
R132	1-215-409-00	METAL 330 1% 1/6W	
R133	1-215-423-00	METAL 1.2K 1% 1/6W	
R134	1-215-445-00	METAL 10K 1% 1/6W	
R135	1-215-428-00	METAL 2K 1% 1/6W	
R136	1-215-445-00	METAL 10K 1% 1/6W	
R138	1-215-449-00	METAL 15K 1% 1/6W	
R139	1-215-421-00	METAL 1K 1% 1/6W	
R140	1-215-441-00	METAL 6.8K 1% 1/6W	
R141	1-214-702-00	METAL 75 1% 1/4W	
R142	1-249-399-11	CARBON 33 5% 1/4W	
R144	1-249-429-11	CARBON 10K 5% 1/4W	
R145	1-249-393-11	CARBON 10 5% 1/4W	
R146	1-247-903-00	CARBON 1M 5% 1/4W	
R148	1-249-405-11	CARBON 100 5% 1/4W	
R149	1-249-441-11	CARBON 100K 5% 1/4W	
R201	1-249-405-11	CARBON 100 5% 1/4W	
R202	1-249-433-11	CARBON 22K 5% 1/4W	
R203	1-215-413-00	METAL 470 1% 1/6W	
R204	1-215-429-00	METAL 2.2K 1% 1/6W	
R205	1-215-429-00	METAL 2.2K 1% 1/6W	
R206	1-249-405-11	CARBON 100 5% 1/4W	
R207	1-215-415-00	METAL 560 1% 1/6W	
R208	1-249-405-11	CARBON 100 5% 1/4W	
R209	1-215-411-00	METAL 390 1% 1/6W	
R210	1-249-405-11	CARBON 100 5% 1/4W	
R211	1-215-411-00	METAL 390 1% 1/6W	
R212	1-249-405-11	CARBON 100 5% 1/4W	
R213	1-249-421-11	CARBON 2.2K 5% 1/4W	
R216	1-249-417-11	CARBON 1K 5% 1/4W	
R217	1-247-846-11	CARBON 4.3K 5% 1/4W	
R218	1-249-435-11	CARBON 33K 5% 1/4W	
R222	1-249-405-11	CARBON 100 5% 1/4W	
R223	1-249-429-11	CARBON 10K 5% 1/4W	
R224	1-247-903-00	CARBON 1M 5% 1/4W	
R225	1-249-405-11	CARBON 100 5% 1/4W	
R226	1-215-419-00	METAL 820 1% 1/6W	
R227	1-215-409-00	METAL 330 1% 1/6W	
R228	1-215-429-00	METAL 2.2K 1% 1/6W	
R229	1-215-429-00	METAL 2.2K 1% 1/6W	
R231	1-215-445-00	METAL 10K 1% 1/6W	
R232	1-215-409-00	METAL 330 1% 1/6W	
R233	1-215-423-00	METAL 1.2K 1% 1/6W	
R234	1-215-445-00	METAL 10K 1% 1/6W	
R235	1-215-428-00	METAL 2K 1% 1/6W	
R236	1-215-445-00	METAL 10K 1% 1/6W	
R238	1-215-449-00	METAL 15K 1% 1/6W	
R239	1-215-421-00	METAL 1K 1% 1/6W	
R240	1-215-441-00	METAL 6.8K 1% 1/6W	
R241	1-214-702-00	METAL 75 1% 1/4W	
R242	1-249-399-11	CARBON 33 5% 1/4W	
R244	1-249-429-11	CARBON 10K 5% 1/4W	
R245	1-249-393-11	CARBON 10 5% 1/4W	
R246	1-247-903-00	CARBON 1M 5% 1/4W	
R248	1-249-405-11	CARBON 100 5% 1/4W	
R249	1-249-441-11	CARBON 100K 5% 1/4W	
R301	1-249-405-11	CARBON 100 5% 1/4W	
R302	1-249-433-11	CARBON 22K 5% 1/4W	
R303	1-215-413-00	METAL 470 1% 1/6W	
R304	1-215-429-00	METAL 2.2K 1% 1/6W	
R305	1-215-429-00	METAL 2.2K 1% 1/6W	
R306	1-249-405-11	CARBON 100 5% 1/4W	
R307	1-215-415-00	METAL 560 1% 1/6W	
R308	1-249-405-11	CARBON 100 5% 1/4W	
R309	1-215-411-00	METAL 390 1% 1/6W	
R310	1-249-405-11	CARBON 100 5% 1/4W	
R311	1-215-411-00	METAL 390 1% 1/6W	
R312	1-249-405-11	CARBON 100 5% 1/4W	
R313	1-249-421-11	CARBON 2.2K 5% 1/4W	
R316	1-249-417-11	CARBON 1K 5% 1/4W	
R317	1-247-846-11	CARBON 4.3K 5% 1/4W	
R318	1-249-435-11	CARBON 33K 5% 1/4W	
R322	1-249-405-11	CARBON 100 5% 1/4W	
R323	1-249-429-11	CARBON 10K 5% 1/4W	
R324	1-247-903-00	CARBON 1M 5% 1/4W	

BD P R

Ref.No.	Part No.	Description				Remark
R325	1-249-405-11	CARBON	100	5%	1/4W	
R326	1-215-419-00	METAL	820	1%	1/6W	
R327	1-215-409-00	METAL	330	1%	1/6W	
R328	1-215-429-00	METAL	2.2K	1%	1/6W	
R329	1-215-429-00	METAL	2.2K	1%	1/6W	
R331	1-215-445-00	METAL	10K	1%	1/6W	
R332	1-215-409-00	METAL	330	1%	1/6W	
R333	1-215-423-00	METAL	1.2K	1%	1/6W	
R334	1-215-445-00	METAL	10K	1%	1/6W	
R335	1-215-428-00	METAL	2K	1%	1/6W	
R336	1-215-445-00	METAL	10K	1%	1/6W	
R338	1-215-449-00	METAL	15K	1%	1/6W	
R339	1-215-421-00	METAL	1K	1%	1/6W	
R340	1-215-441-00	METAL	6.8K	1%	1/6W	
R341	1-214-702-00	METAL	75	1%	1/4W	
R342	1-249-399-11	CARBON	33	5%	1/4W	
R344	1-249-429-11	CARBON	10K	5%	1/4W	
R345	1-249-393-11	CARBON	10	5%	1/4W	
R346	1-247-903-00	CARBON	1M	5%	1/4W	
R348	1-249-405-11	CARBON	100	5%	1/4W	
R349	1-249-441-11	CARBON	100K	5%	1/4W	

****

*1-617-480-11 P BOARD
****

CONNECTOR

P1	*1-508-768-00	PIN, CONNECTOR (5MM PITCH) 6P	

****

*A-1235-012-A R BOARD, COMPLETE
****

CAPACITOR

C1	1-101-004-00	CERAMIC	0.01MF		50V
C2	1-101-004-00	CERAMIC	0.01MF		50V
C3	1-101-004-00	CERAMIC	0.01MF		50V
C4	1-102-074-00	CERAMIC	0.001MF	10%	50V
C5	1-102-074-00	CERAMIC	0.001MF	10%	50V
C6	1-101-004-00	CERAMIC	0.01MF		50V
C7	1-101-004-00	CERAMIC	0.01MF		50V
C8	1-102-074-00	CERAMIC	0.001MF	10%	50V
C9	1-102-074-00	CERAMIC	0.001MF	10%	50V
C10	1-102-074-00	CERAMIC	0.001MF	10%	50V
C11	1-102-074-00	CERAMIC	0.001MF	10%	50V
C12	1-102-074-00	CERAMIC	0.001MF	10%	50V
C13	1-102-074-00	CERAMIC	0.001MF	10%	50V
C14	1-123-356-00	ELECT	10MF	20%	16V
C15	1-123-356-00	ELECT	10MF	20%	16V
C16	1-123-356-00	ELECT	10MF	20%	16V
C17	1-123-356-00	ELECT	10MF	20%	16V
C18	1-126-101-11	ELECT	100MF	20%	10V
C19	1-123-332-00	ELECT	47MF	20%	16V
C20	1-123-332-00	ELECT	47MF	20%	16V
C21	1-123-356-00	ELECT	10MF	20%	16V
C22	1-123-356-00	ELECT	10MF	20%	16V
C24	1-136-165-00	FILM	0.1MF	5%	50V
C25	1-136-165-00	FILM	0.1MF	5%	50V
C40	1-123-332-00	ELECT	47MF	20%	16V
C41	1-102-074-00	CERAMIC	0.001MF	10%	50V
C50	1-126-234-11	ELECT	2200MF	20%	16V
C51	1-124-360-00	ELECT	1000MF	20%	16V
C52	1-102-074-00	CERAMIC	0.001MF	10%	50V
C60	1-126-234-11	ELECT	2200MF	20%	16V
C61	1-124-360-00	ELECT	1000MF	20%	16V
C62	1-102-074-00	CERAMIC	0.001MF	10%	50V
C70	1-136-165-00	FILM	0.1MF	5%	50V
C71	1-102-074-00	CERAMIC	0.001MF	10%	50V
C72	1-102-074-00	CERAMIC	0.001MF	10%	50V
C80	1-123-332-00	ELECT	47MF	20%	16V
C81	1-123-332-00	ELECT	47MF	20%	16V
C82	1-123-332-00	ELECT	47MF	20%	16V
C83	1-123-332-00	ELECT	47MF	20%	16V
C84	1-123-332-00	ELECT	47MF	20%	16V
C85	1-123-332-00	ELECT	47MF	20%	16V
C100	1-102-074-00	CERAMIC	0.001MF	10%	50V
C101	1-102-074-00	CERAMIC	0.001MF	10%	50V
C102	1-136-165-00	FILM	0.1MF	5%	50V
C200	1-102-074-00	CERAMIC	0.001MF	10%	50V
C201	1-102-074-00	CERAMIC	0.001MF	10%	50V
C202	1-136-165-00	FILM	0.1MF	5%	50V
C300	1-102-074-00	CERAMIC	0.001MF	10%	50V
C301	1-102-074-00	CERAMIC	0.001MF	10%	50V
C302	1-136-165-00	FILM	0.1MF	5%	50V
C400	1-102-074-00	CERAMIC	0.001MF	10%	50V
C401	1-102-074-00	CERAMIC	0.001MF	10%	50V
C402	1-136-165-00	FILM	0.1MF	5%	50V
C500	1-102-074-00	CERAMIC	0.001MF	10%	50V
C501	1-102-074-00	CERAMIC	0.001MF	10%	50V
C502	1-136-165-00	FILM	0.1MF	5%	50V
C600	1-102-074-00	CERAMIC	0.001MF	10%	50V
C601	1-102-074-00	CERAMIC	0.001MF	10%	50V
C602	1-136-165-00	FILM	0.1MF	5%	50V
C701	1-101-004-00	CERAMIC	0.01MF		50V
C702	1-101-004-00	CERAMIC	0.01MF		50V
C703	1-101-004-00	CERAMIC	0.01MF		50V
C704	1-101-004-00	CERAMIC	0.01MF		50V
C705	1-101-004-00	CERAMIC	0.01MF		50V
C706	1-101-004-00	CERAMIC	0.01MF		50V
C707	1-101-004-00	CERAMIC	0.01MF		50V
C708	1-101-004-00	CERAMIC	0.01MF		50V
C709	1-101-004-00	CERAMIC	0.01MF		50V
C710	1-101-004-00	CERAMIC	0.01MF		50V
C711	1-101-004-00	CERAMIC	0.01MF		50V
C712	1-101-004-00	CERAMIC	0.01MF		50V
C713	1-101-004-00	CERAMIC	0.01MF		50V
C714	1-101-004-00	CERAMIC	0.01MF		50V
C715	1-101-004-00	CERAMIC	0.01MF		50V
C716	1-101-004-00	CERAMIC	0.01MF		50V

DIODE

D1	8-719-971-20	DIODE ERC38-06
D2	8-719-971-20	DIODE ERC38-06
D3	8-719-911-19	DIODE 1SS119
D4	8-719-911-19	DIODE 1SS119
D5	8-719-110-03	DIODE RD7.5ES-B2
D6	8-719-110-03	DIODE RD7.5ES-B2
D7	8-719-911-19	DIODE 1SS119
D8	8-719-110-18	DIODE RD10ES-B3

IC

IC1	8-759-202-74	IC TC74HC04P
IC2	8-759-202-84	IC TC74HC109P
IC3	8-759-771-25	IC MB7112E-HDM
IC4	8-749-900-14	IC CP2005S

Ref.No.	Part No.	Description	Remark
IC5	8-759-145-58	IC UPC4558C	
IC6	8-759-145-58	IC UPC4558C	
IC7	8-759-145-58	IC UPC4558C	
IC8	8-759-700-20	IC NJM79M05A	
IC9	8-759-107-33	IC UPC1060C	
IC10	8-759-990-82	IC TL082CP	
IC11	8-759-145-58	IC UPC4558C	
IC12	8-759-145-58	IC UPC4558C	
IC13	8-759-145-58	IC UPC4558C	
IC14	8-759-145-58	IC UPC4558C	
IC15	8-759-145-58	IC UPC4558C	
IC16	8-759-145-58	IC UPC4558C	
IC17	8-759-145-58	IC UPC4558C	
IC18	8-759-145-58	IC UPC4558C	
IC19	8-759-240-53	IC TC4053BP	
IC20	8-759-240-53	IC TC4053BP	
IC21	8-759-145-58	IC UPC4558C	
IC22	8-759-145-58	IC UPC4558C	
IC23	8-759-145-58	IC UPC4558C	

TRANSISTOR

Q1	8-729-313-82	TRANSISTOR 2SD1138	
Q2	8-729-386-12	TRANSISTOR 2SB861	
Q3	8-729-313-82	TRANSISTOR 2SD1138	
Q4	8-729-386-12	TRANSISTOR 2SB861	
Q5	8-729-313-82	TRANSISTOR 2SD1138	
Q6	8-729-386-12	TRANSISTOR 2SB861	
Q7	8-729-313-82	TRANSISTOR 2SD1138	
Q8	8-729-386-12	TRANSISTOR 2SB861	
Q9	8-729-313-82	TRANSISTOR 2SD1138	
Q10	8-729-386-12	TRANSISTOR 2SB861	
Q11	8-729-313-82	TRANSISTOR 2SD1138	
Q12	8-729-386-12	TRANSISTOR 2SB861	
Q13	8-729-900-36	TRANSISTOR DTC124ES	

CONNECTOR

R1	*1-566-056-11	PIN, CONNECTOR 4P	
R2	*1-566-055-11	PIN, CONNECTOR 3P	
R3	*1-566-054-11	PIN, CONNECTOR 2P	
R4	*1-566-054-11	PIN, CONNECTOR 2P	
R5	*1-566-060-11	PIN, CONNECTOR 8P	
R6	*1-566-058-11	PIN, CONNECTOR 6P	
R7	*1-566-056-11	PIN, CONNECTOR 4P	
R8	*1-566-056-11	PIN, CONNECTOR 4P	
R9	*1-566-056-11	PIN, CONNECTOR 4P	

RESISTOR

R1	1-215-445-00	METAL	10K	1%	1/6W	
R2	1-215-439-00	METAL	5.6K	1%	1/6W	
R3	1-249-417-11	CARBON	1K	5%	1/4W	
R4	1-249-417-11	CARBON	1K	5%	1/4W	
R5	1-249-417-11	CARBON	1K	5%	1/4W	
R6	1-249-417-11	CARBON	1K	5%	1/4W	
R7	1-249-423-11	CARBON	3.3K	5%	1/4W	
R8	1-249-423-11	CARBON	3.3K	5%	1/4W	
R9	1-215-433-00	METAL	3.3K	1%	1/6W	
R10	1-215-433-00	METAL	3.3K	1%	1/6W	
R11	1-215-439-00	METAL	5.6K	1%	1/6W	
R12	1-215-439-00	METAL	5.6K	1%	1/6W	
R13	1-215-445-00	METAL	10K	1%	1/6W	
R14	1-215-445-00	METAL	10K	1%	1/6W	
R15	1-249-426-11	CARBON	5.6K	5%	1/4W	
R16	1-215-439-00	METAL	5.6K	1%	1/6W	
R17	1-215-439-00	METAL	5.6K	1%	1/6W	
R18	1-215-445-00	METAL	10K	1%	1/6W	
R19	1-215-445-00	METAL	10K	1%	1/6W	
R20	1-249-426-11	CARBON	5.6K	5%	1/4W	
R21	1-215-445-00	METAL	10K	1%	1/6W	
R22	1-215-445-00	METAL	10K	1%	1/6W	
R23	1-215-444-00	METAL	9.1K	1%	1/6W	
R24	1-249-423-11	CARBON	3.3K	5%	1/4W	
R25	1-215-445-00	METAL	10K	1%	1/6W	
R26	1-215-445-00	METAL	10K	1%	1/6W	
R27	1-249-426-11	CARBON	5.6K	5%	1/4W	
R28	1-249-417-11	CARBON	1K	5%	1/4W	
R29	1-249-417-11	CARBON	1K	5%	1/4W	
R30	1-215-405-00	METAL	220	1%	1/6W	
R31	1-249-429-11	CARBON	10K	5%	1/4W	
R32	1-249-429-11	CARBON	10K	5%	1/4W	
R33	1-249-417-11	CARBON	1K	5%	1/4W	
R34	1-249-417-11	CARBON	1K	5%	1/4W	
R35	1-249-429-11	CARBON	10K	5%	1/4W	
R36	1-249-429-11	CARBON	10K	5%	1/4W	
R40	1-215-483-00	METAL	390K	1%	1/6W	
R41	1-249-429-11	CARBON	10K	5%	1/4W	
R42	1-215-469-00	METAL	100K	1%	1/6W	
R43	1-215-437-00	METAL	4.7K	1%	1/6W	
R44	1-215-433-00	METAL	3.3K	1%	1/6W	
R45	1-215-445-00	METAL	10K	1%	1/6W	
R46	1-215-445-00	METAL	10K	1%	1/6W	
R47	1-215-448-00	METAL	13K	1%	1/6W	
R48	1-249-424-11	CARBON	3.9K	5%	1/4W	
R50	1-214-940-11	METAL	1.3M	1%	1/2W	
R51	1-215-473-00	METAL	150K	1%	1/6W	
R52	1-247-895-00	CARBON	470K	5%	1/4W	
R53	1-247-895-00	CARBON	470K	5%	1/4W	
R54	1-215-445-00	METAL	10K	1%	1/6W	
R55	1-215-441-00	METAL	6.8K	1%	1/6W	
R56	1-215-445-00	METAL	10K	1%	1/6W	
R57	1-215-445-00	METAL	10K	1%	1/6W	
R58	1-249-421-11	CARBON	2.2K	5%	1/4W	
R60	1-214-947-00	METAL	2.7M	1%	1/2W	
R61	1-215-493-00	METAL	1M	1%	1/6W	
R62	1-247-895-00	CARBON	470K	5%	1/4W	
R63	1-247-895-00	CARBON	470K	5%	1/4W	
R64	1-215-445-00	METAL	10K	1%	1/6W	
R65	1-215-443-00	METAL	8.2K	1%	1/6W	
R66	1-215-445-00	METAL	10K	1%	1/6W	
R67	1-215-445-00	METAL	10K	1%	1/6W	
R68	1-249-422-11	CARBON	2.7K	5%	1/4W	
R70	1-249-433-11	CARBON	22K	5%	1/4W	
R71	1-215-445-00	METAL	10K	1%	1/6W	
R72	1-249-429-11	CARBON	10K	5%	1/4W	
R73	1-215-469-00	METAL	100K	1%	1/6W	
R74	1-215-437-00	METAL	4.7K	1%	1/6W	
R75	1-215-447-00	METAL	12K	1%	1/6W	
R76	1-215-445-00	METAL	10K	1%	1/6W	
R77	1-215-445-00	METAL	10K	1%	1/6W	
R78	1-215-459-00	METAL	39K	1%	1/6W	
R79	1-249-425-11	CARBON	4.7K	5%	1/4W	
R81	1-215-443-00	METAL	8.2K	1%	1/6W	
R82	1-215-435-00	METAL	3.9K	1%	1/6W	
R83	1-215-443-00	METAL	8.2K	1%	1/6W	
R84	1-215-435-00	METAL	3.9K	1%	1/6W	
R110	1-215-421-00	METAL	1K	1%	1/6W	
R111	1-215-453-00	METAL	22K	1%	1/6W	
R112	1-215-453-00	METAL	22K	1%	1/6W	

R F

The components identified by shading and mark ⚠ are critical for safety.
Replace only with part number specified.

Ref.No.	Part No.	Description				Remark
R113	1-215-457-00	METAL	33K	1%	1/6W	
R114	1-215-445-00	METAL	10K	1%	1/6W	
R115	1-215-445-00	METAL	10K	1%	1/6W	
R120	1-215-453-00	METAL	22K	1%	1/6W	
R121	1-249-423-11	CARBON	3.3K	5%	1/4W	
R122	1-215-454-00	METAL	24K	1%	1/6W	
R123	1-215-445-00	METAL	10K	1%	1/6W	
R124	1-215-453-00	METAL	22K	1%	1/6W	
R125	1-215-433-00	METAL	3.3K	1%	1/6W	
R126	1-249-422-11	CARBON	2.7K	5%	1/4W	
R127	1-249-382-11	CARBON	1.2	5%	1/4W	F
R128	1-249-382-11	CARBON	1.2	5%	1/4W	F
R129	1-216-355-11	METAL OXIDE	3.3	5%	1W	F
R210	1-215-421-00	METAL	1K	1%	1/6W	
R211	1-215-453-00	METAL	22K	1%	1/6W	
R212	1-215-453-00	METAL	22K	1%	1/6W	
R216	1-215-451-00	METAL	18K	1%	1/6W	
R217	1-215-445-00	METAL	10K	1%	1/6W	
R218	1-215-445-00	METAL	10K	1%	1/6W	
R220	1-215-453-00	METAL	22K	1%	1/6W	
R221	1-249-423-11	CARBON	3.3K	5%	1/4W	
R222	1-215-454-00	METAL	24K	1%	1/6W	
R223	1-215-445-00	METAL	10K	1%	1/6W	
R224	1-215-453-00	METAL	22K	1%	1/6W	
R225	1-215-433-00	METAL	3.3K	1%	1/6W	
R226	1-249-422-11	CARBON	2.7K	5%	1/4W	
R227	1-249-382-11	CARBON	1.2	5%	1/4W	F
R228	1-249-382-11	CARBON	1.2	5%	1/4W	F
R229	1-216-355-11	METAL OXIDE	3.3	5%	1W	F
R310	1-215-421-00	METAL	1K	1%	1/6W	
R311	1-215-453-00	METAL	22K	1%	1/6W	
R320	1-215-453-00	METAL	22K	1%	1/6W	
R321	1-249-426-11	CARBON	5.6K	5%	1/4W	
R322	1-215-454-00	METAL	24K	1%	1/6W	
R323	1-215-445-00	METAL	10K	1%	1/6W	
R324	1-215-453-00	METAL	22K	1%	1/6W	
R325	1-215-441-00	METAL	6.8K	1%	1/6W	
R326	1-249-426-11	CARBON	5.6K	5%	1/4W	
R327	1-249-382-11	CARBON	1.2	5%	1/4W	F
R328	1-249-382-11	CARBON	1.2	5%	1/4W	F
R329	1-216-355-11	METAL OXIDE	3.3	5%	1W	F
R410	1-215-421-00	METAL	1K	1%	1/6W	
R411	1-215-453-00	METAL	22K	1%	1/6W	
R420	1-215-453-00	METAL	22K	1%	1/6W	
R421	1-249-426-11	CARBON	5.6K	5%	1/4W	
R422	1-215-454-00	METAL	24K	1%	1/6W	
R423	1-215-445-00	METAL	10K	1%	1/6W	
R424	1-215-453-00	METAL	22K	1%	1/6W	
R425	1-215-441-00	METAL	6.8K	1%	1/6W	
R426	1-249-426-11	CARBON	5.6K	5%	1/4W	
R427	1-249-382-11	CARBON	1.2	5%	1/4W	F
R428	1-249-382-11	CARBON	1.2	5%	1/4W	F
R429	1-216-355-11	METAL OXIDE	3.3	5%	1W	F
R510	1-215-421-00	METAL	1K	1%	1/6W	
R511	1-215-453-00	METAL	22K	1%	1/6W	
R512	1-215-453-00	METAL	22K	1%	1/6W	
R513	1-215-453-00	METAL	22K	1%	1/6W	
R514	1-215-445-00	METAL	10K	1%	1/6W	
R515	1-215-445-00	METAL	10K	1%	1/6W	
R520	1-215-453-00	METAL	22K	1%	1/6W	
R521	1-249-423-11	CARBON	3.3K	5%	1/4W	
R522	1-215-454-00	METAL	24K	1%	1/6W	
R523	1-215-445-00	METAL	10K	1%	1/6W	
R524	1-215-453-00	METAL	22K	1%	1/6W	
R525	1-215-433-00	METAL	3.3K	1%	1/6W	
R526	1-249-422-11	CARBON	2.7K	5%	1/4W	
R527	1-249-382-11	CARBON	1.2	5%	1/4W	F
R528	1-249-382-11	CARBON	1.2	5%	1/4W	F
R529	1-216-355-11	METAL OXIDE	3.3	5%	1W	F
R610	1-215-421-00	METAL	1K	1%	1/6W	
R611	1-215-453-00	METAL	22K	1%	1/6W	
R612	1-215-453-00	METAL	22K	1%	1/6W	
R616	1-215-453-00	METAL	22K	1%	1/6W	
R617	1-215-445-00	METAL	10K	1%	1/6W	
R618	1-215-445-00	METAL	10K	1%	1/6W	
R620	1-215-453-00	METAL	22K	1%	1/6W	
R621	1-249-423-11	CARBON	3.3K	5%	1/4W	
R622	1-215-454-00	METAL	24K	1%	1/6W	
R623	1-215-445-00	METAL	10K	1%	1/6W	
R624	1-215-453-00	METAL	22K	1%	1/6W	
R625	1-215-433-00	METAL	3.3K	1%	1/6W	
R626	1-249-422-11	CARBON	2.7K	5%	1/4W	
R627	1-249-382-11	CARBON	1.2	5%	1/4W	F
R628	1-249-382-11	CARBON	1.2	5%	1/4W	F
R629	1-216-355-11	METAL OXIDE	3.3	5%	1W	F

VARIABLE RESISTOR

RV1	1-237-516-21	RES, ADJ, CERMET	2K		
RV2	1-237-517-21	RES, ADJ, CERMET	5K		
RV3	1-237-517-21	RES, ADJ, CERMET	5K		
RV4	1-237-518-21	RES, ADJ, CERMET	10K		
RV5	1-237-518-21	RES, ADJ, CERMET	10K		
RV6	1-237-516-21	RES, ADJ, CERMET	2K		

****

*1-619-844-11 F BOARD
****

CAPACITOR

C1	⚠1-130-712-11	FILM	0.47MF	20%	250V
C2	⚠1-161-742-51	CERAMIC	0.0022MF	20%	400V
C3	⚠1-161-742-51	CERAMIC	0.0022MF	20%	400V
C4	⚠1-161-742-51	CERAMIC	0.0022MF	20%	400V
C5	⚠1-161-742-51	CERAMIC	0.0022MF	20%	400V
C6	⚠1-130-711-11	FILM	0.22MF	20%	250V
C7	⚠1-161-953-51	CERAMIC	0.0047MF	20%	400V
C8	⚠1-161-953-51	CERAMIC	0.0047MF	20%	400V
C9	⚠1-161-953-51	CERAMIC	0.0047MF	20%	400V
C10	⚠1-161-953-51	CERAMIC	0.0047MF	20%	400V
C11	1-125-538-11	ELECT(BLOCK)	1000MF	20%	200V
C12	1-125-538-11	ELECT(BLOCK)	1000MF	20%	200V
C13	1-108-694-81	MYLAR	0.015MF	10%	200V
C14	1-123-379-00	ELECT	0.47MF	20%	50V

DIODE

D1	8-719-003-08	THYRISTOR CR3CM-8
D2	⚠8-719-300-07	DIODE S3WB60Z

CONNECTOR

F1	*1-508-784-00	PIN, CONNECTOR (5MM PITCH) 1P
F2	*1-506-348-99	PIN, CONNECTOR 3P
F3	*1-506-371-00	PIN, CONNECTOR 2P
F4	*1-508-765-00	PIN, CONNECTOR (5MM PITCH) 3P
F5	*1-508-765-00	PIN, CONNECTOR (5MM PITCH) 3P
F6	*1-508-767-00	PIN, CONNECTOR (5MM PITCH) 5P
F7	*1-566-054-11	PIN, CONNECTOR 2P

The components identified by shading and mark ⚠ are critical for safety.
Replace only with part number specified.

F **QC**

Ref.No.	Part No.	Description				Remark
F8	*1-506-348-99	PIN, CONNECTOR 3P				
F9	*1-506-348-99	PIN, CONNECTOR 3P				
F10	*1-508-765-00	PIN, CONNECTOR (5MM PITCH) 3P				
F12	*1-508-767-00	PIN, CONNECTOR (5MM PITCH) 5P				
		NEON LAMP				
NL1	1-519-331-11	LAMP, NEON 3P				
		RESISTOR				
R1	⚠1-202-730-91	SOLID	8.2M	10%	1/2W	
R2	⚠1-202-845-91	SOLID	390K	10%	1/2W	
R3	⚠1-217-295-11	WIREWOUND	5.6	10%	5W	F
R4	1-249-465-11	CARBON	47K	5%	1/4W	
R5	1-249-492-11	CARBON	47K	5%	1/2W	
R6	1-249-465-11	CARBON	47K	5%	1/4W	
R7	1-217-337-00	WIREWOUND	22	10%	7W	F
R8	1-247-717-11	CARBON	2.2K	5%	1/4W	
R9	1-247-713-11	CARBON	1K	5%	1/4W	
R10	1-217-337-00	WIREWOUND	22	10%	7W	F
		RELAY				
RY1	⚠1-515-491-11	RELAY (POWER)				
		TRANSFORMER				
T1	⚠1-421-590-11	TRANSFORMER, LINE FILTER				
T2	⚠1-421-590-11	TRANSFORMER, LINE FILTER				
		THERMISTOR				
TH1	⚠1-800-416-11	THERMISTOR				
TH2	⚠1-800-416-11	THERMISTOR				
THP1	⚠1-800-686-32	THERMISTOR (POSITIVE)				
THP2	⚠1-806-387-11	THERMISTOR (POSITIVE)				

****

*A-1275-069-A QC BOARD, COMPLETE
****

1-536-992-11 TERMINAL BOARD, INPUT/OUTPUT

Ref.No.	Part No.	Description				Remark
		CAPACITOR				
C101	1-161-021-11	CERAMIC	0.047MF	10%	25V	
C102	1-124-631-11	ELECT	47MF	20%	16V	
C103	1-101-004-00	CERAMIC	0.01MF		50V	
C104	1-123-332-00	ELECT	47MF	20%	16V	
C106	1-102-934-00	CERAMIC	1PF	0.25PF	50V	
C107	1-102-934-00	CERAMIC	1PF	0.25PF	50V	
C108	1-124-631-11	ELECT	47MF	20%	16V	
C109	1-101-004-00	CERAMIC	0.01MF		50V	
C110	1-161-021-11	CERAMIC	0.047MF	10%	25V	
C111	1-124-631-11	ELECT	47MF	20%	16V	
C112	1-101-004-00	CERAMIC	0.01MF		50V	
C113	1-161-021-11	CERAMIC	0.047MF	10%	25V	
C130	1-101-004-00	CERAMIC	0.01MF		50V	
C131	1-124-963-11	ELECT	33MF	20%	16V	
C132	1-101-004-00	CERAMIC	0.01MF		50V	
C133	1-124-963-11	ELECT	33MF	20%	16V	
C134	1-101-004-00	CERAMIC	0.01MF		50V	
C135	1-124-963-11	ELECT	33MF	20%	16V	
C136	1-101-004-00	CERAMIC	0.01MF		50V	
C137	1-124-963-11	ELECT	33MF	20%	16V	
C138	1-101-004-00	CERAMIC	0.01MF		50V	
C139	1-124-963-11	ELECT	33MF	20%	16V	
C140	1-101-004-00	CERAMIC	0.01MF		50V	
C141	1-124-963-11	ELECT	33MF	20%	16V	
C142	1-101-004-00	CERAMIC	0.01MF		50V	
C143	1-101-004-00	CERAMIC	0.01MF		50V	
C144	1-101-004-00	CERAMIC	0.01MF		50V	
C145	1-101-004-00	CERAMIC	0.01MF		50V	
C146	1-101-004-00	CERAMIC	0.01MF		50V	
		TRIMMER				
CV101	1-141-178-00	CAP, TRIMMER				
		TRANSISTOR				
Q101	8-729-105-88	TRANSISTOR 2SC2570A				
Q102	8-729-105-88	TRANSISTOR 2SC2570A				
Q103	8-729-103-19	TRANSISTOR 2SA1206-K1				
Q104	8-729-105-88	TRANSISTOR 2SC2570A				
Q105	8-729-105-88	TRANSISTOR 2SC2570A				
Q106	8-729-119-78	TRANSISTOR 2SC2785-HFE				
Q107	8-729-119-78	TRANSISTOR 2SC2785-HFE				
Q108	8-729-119-78	TRANSISTOR 2SC2785-HFE				
Q109	8-729-119-78	TRANSISTOR 2SC2785-HFE				
		CONNECTOR				
QC1	*1-564-465-11	CONNECTOR (LIGHT ANGLE) 22P				
QC2	*1-566-058-11	PIN, CONNECTOR 6P				
		RESISTOR				
R101	1-249-417-11	CARBON	1K	5%	1/4W	
R102	1-249-417-11	CARBON	1K	5%	1/4W	
R103	1-215-440-00	METAL	6.2K	1%	1/6W	
R104	1-215-447-00	METAL	12K	1%	1/6W	
R105	1-215-445-00	METAL	10K	1%	1/6W	
R106	1-215-448-00	METAL	13K	1%	1/6W	
R107	1-215-429-00	METAL	2.2K	1%	1/6W	
R108	1-215-421-00	METAL	1K	1%	1/6W	
R109	1-215-437-00	METAL	4.7K	1%	1/6W	
R110	1-215-397-00	METAL	100	1%	1/6W	
R111	1-249-405-11	CARBON	100	5%	1/4W	
R112	1-249-420-11	CARBON	1.8K	5%	1/4W	
R113	1-215-421-00	METAL	1K	1%	1/6W	
R114	1-214-702-00	METAL	75	1%	1/4W	
R115	1-249-417-11	CARBON	1K	5%	1/4W	
R116	1-249-405-11	CARBON	100	5%	1/4W	
R117	1-249-431-11	CARBON	15K	5%	1/4W	
R118	1-249-427-11	CARBON	6.8K	5%	1/4W	
R119	1-249-439-11	CARBON	68K	5%	1/4W	
R121	1-249-425-11	CARBON	4.7K	5%	1/4W	
R122	1-214-702-00	METAL	75	1%	1/4W	
R123	1-249-417-11	CARBON	1K	5%	1/4W	
R124	1-249-405-11	CARBON	100	5%	1/4W	
R125	1-249-427-11	CARBON	6.8K	5%	1/4W	
R126	1-249-431-11	CARBON	15K	5%	1/4W	
R127	1-249-439-11	CARBON	68K	5%	1/4W	
R128	1-249-405-11	CARBON	100	5%	1/4W	
R129	1-249-425-11	CARBON	4.7K	5%	1/4W	
R131	1-247-104-00	CARBON	75	5%	1/4W	
R132	1-247-104-00	CARBON	75	5%	1/4W	
R133	1-247-804-11	CARBON	75	5%	1/4W	
R134	1-249-421-11	CARBON	2.2K	5%	1/4W	

QC QD QA

Ref.No.	Part No.	Description				Remark
R135	1-249-421-11	CARBON	2.2K	5%	1/4W	
R136	1-249-421-11	CARBON	2.2K	5%	1/4W	
R137	1-249-421-11	CARBON	2.2K	5%	1/4W	
R138	1-249-421-11	CARBON	2.2K	5%	1/4W	
R140	1-249-405-11	CARBON	100	5%	1/4W	
		VARIABLE RESISTOR				
RV101	1-237-516-21	RES, ADJ, CERMET 2K				
**********						
	*1-617-479-11	QD BOARD				
		********				
		CONNECTOR				
QB1	1-563-265-11	CONNECTOR, MULTIPLE 10P				
**********						
	*A-1275-089-A	QA BOARD, COMPLETE				
		**********				
	1-537-174-11	TERMINAL BOARD, INPUT/OUTPUT				
		CAPACITOR				
C101	1-161-021-11	CERAMIC	0.047MF	10%	25V	
C102	1-124-631-11	ELECT	47MF	20%	16V	
C103	1-101-004-00	CERAMIC	0.01MF		50V	
C104	1-123-332-00	ELECT	47MF	20%	16V	
C105	1-102-934-00	CERAMIC	1PF	0.25PF	50V	
C106	1-102-934-00	CERAMIC	1PF	0.25PF	50V	
C107	1-161-021-11	CERAMIC	0.047MF	10%	25V	
C108	1-124-631-11	ELECT	47MF	20%	16V	
C109	1-101-004-00	CERAMIC	0.01MF		50V	
C110	1-123-332-00	ELECT	47MF	20%	16V	
C111	1-102-934-00	CERAMIC	1PF	0.25PF	50V	
C112	1-102-934-00	CERAMIC	1PF	0.25PF	50V	
C113	1-161-021-11	CERAMIC	0.047MF	10%	25V	
C114	1-124-631-11	ELECT	47MF	20%	16V	
C115	1-101-004-00	CERAMIC	0.01MF		50V	
C116	1-123-332-00	ELECT	47MF	20%	16V	
C117	1-102-934-00	CERAMIC	1PF	0.25PF	50V	
C118	1-102-934-00	CERAMIC	1PF	0.25PF	50V	
C128	1-124-963-11	ELECT	33MF	20%	16V	
C129	1-101-004-00	CERAMIC	0.01MF		50V	
C130	1-101-004-00	CERAMIC	0.01MF		50V	
C131	1-124-963-11	ELECT	33MF	20%	16V	
C132	1-124-963-11	ELECT	33MF	20%	16V	
C133	1-101-004-00	CERAMIC	0.01MF		50V	
C134	1-101-004-00	CERAMIC	0.01MF		50V	
C135	1-124-963-11	ELECT	33MF	20%	16V	
C136	1-124-963-11	ELECT	33MF	20%	16V	
C137	1-101-004-00	CERAMIC	0.01MF		50V	
C138	1-101-004-00	CERAMIC	0.01MF		50V	
C139	1-124-963-11	ELECT	33MF	20%	16V	
		TRIMMER				
CV101	1-141-178-00	CAP, TRIMMER				
CV102	1-141-178-00	CAP, TRIMMER				
CV103	1-141-178-00	CAP, TRIMMER				

Ref.No.	Part No.	Description				Remark
		TRANSISTOR				
Q101	8-729-105-88	TRANSISTOR 2SC2570A				
Q102	8-729-105-88	TRANSISTOR 2SC2570A				
Q103	8-729-103-19	TRANSISTOR 2SA1206-K1				
Q104	8-729-105-88	TRANSISTOR 2SC2570A				
Q105	8-729-105-88	TRANSISTOR 2SC2570A				
Q106	8-729-105-88	TRANSISTOR 2SC2570A				
Q107	8-729-105-88	TRANSISTOR 2SC2570A				
Q108	8-729-103-19	TRANSISTOR 2SA1206-K1				
Q109	8-729-105-88	TRANSISTOR 2SC2570A				
Q110	8-729-105-88	TRANSISTOR 2SC2570A				
Q111	8-729-105-88	TRANSISTOR 2SC2570A				
Q112	8-729-105-88	TRANSISTOR 2SC2570A				
Q113	8-729-103-19	TRANSISTOR 2SA1206-K1				
Q114	8-729-105-88	TRANSISTOR 2SC2570A				
Q115	8-729-105-88	TRANSISTOR 2SC2570A				
		CONNECTOR				
QA1	*1-564-464-11	CONNECTOR (LIGHT ANGLE) 15P				
		RESISTOR				
R101	1-249-417-11	CARBON	1K	5%	1/4W	
R102	1-249-417-11	CARBON	1K	5%	1/4W	
R103	1-215-440-00	METAL	6.2K	1%	1/6W	
R104	1-215-447-00	METAL	12K	1%	1/6W	
R105	1-215-445-00	METAL	10K	1%	1/6W	
R106	1-215-448-00	METAL	13K	1%	1/6W	
R107	1-215-429-00	METAL	2.2K	1%	1/6W	
R108	1-215-421-00	METAL	1K	1%	1/6W	
R109	1-215-437-00	METAL	4.7K	1%	1/6W	
R110	1-249-405-11	CARBON	100	5%	1/4W	
R111	1-215-397-00	METAL	100	1%	1/6W	
R112	1-249-420-11	CARBON	1.8K	5%	1/4W	
R113	1-215-421-00	METAL	1K	1%	1/6W	
R114	1-249-417-11	CARBON	1K	5%	1/4W	
R115	1-249-417-11	CARBON	1K	5%	1/4W	
R116	1-215-440-00	METAL	6.2K	1%	1/6W	
R117	1-215-447-00	METAL	12K	1%	1/6W	
R118	1-215-445-00	METAL	10K	1%	1/6W	
R119	1-215-448-00	METAL	13K	1%	1/6W	
R120	1-215-429-00	METAL	2.2K	1%	1/6W	
R121	1-215-421-00	METAL	1K	1%	1/6W	
R122	1-215-437-00	METAL	4.7K	1%	1/6W	
R123	1-249-405-11	CARBON	100	5%	1/4W	
R124	1-215-397-00	METAL	100	1%	1/6W	
R125	1-249-420-11	CARBON	1.8K	5%	1/4W	
R126	1-215-421-00	METAL	1K	1%	1/6W	
R127	1-249-417-11	CARBON	1K	5%	1/4W	
R128	1-249-417-11	CARBON	1K	5%	1/4W	
R129	1-215-440-00	METAL	6.2K	1%	1/6W	
R130	1-215-447-00	METAL	12K	1%	1/6W	
R131	1-215-445-00	METAL	10K	1%	1/6W	
R132	1-215-448-00	METAL	13K	1%	1/6W	
R133	1-215-429-00	METAL	2.2K	1%	1/6W	
R134	1-215-421-00	METAL	1K	1%	1/6W	
R135	1-215-437-00	METAL	4.7K	1%	1/6W	
R136	1-249-405-11	CARBON	100	5%	1/4W	
R137	1-215-397-00	METAL	100	1%	1/6W	
R138	1-249-420-11	CARBON	1.8K	5%	1/4W	
R139	1-215-421-00	METAL	1K	1%	1/6W	
R140	1-249-405-11	CARBON	100	5%	1/4W	

Ref.No.	Part No.	Description				Remark
R141	1-249-405-11	CARBON	100	5%	1/4W	
R142	1-249-405-11	CARBON	100	5%	1/4W	
R143	1-249-405-11	CARBON	100	5%	1/4W	
R144	1-249-405-11	CARBON	100	5%	1/4W	
R145	1-249-405-11	CARBON	100	5%	1/4W	
R146	1-247-804-11	CARBON	75	5%	1/4W	
R147	1-247-804-11	CARBON	75	5%	1/4W	
R148	1-247-804-11	CARBON	75	5%	1/4W	
		VARIABLE RESISTOR				
RV101	1-237-516-21	RES, ADJ, CERMET 2K				
RV102	1-237-516-21	RES, ADJ, CERMET 2K				
RV103	1-237-516-21	RES, ADJ, CERMET 2K				
**********						
	*A-1275-090-A	QB BOARD, COMPLETE				
		**********				
	1-537-174-21	TERMINAL BOARD, INPUT/OUTPUT				
		CAPACITOR				
C101	1-161-021-11	CERAMIC	0.047MF	10%	25V	
C102	1-124-631-11	ELECT	47MF	20%	16V	
C103	1-101-004-00	CERAMIC	0.01MF		50V	
C104	1-123-332-00	ELECT	47MF	20%	16V	
C105	1-102-934-00	CERAMIC	1PF	0.25PF	50V	
C106	1-102-934-00	CERAMIC	1PF	0.25PF	50V	
C107	1-161-021-11	CERAMIC	0.047MF	10%	25V	
C108	1-124-631-11	ELECT	47MF	20%	16V	
C109	1-101-004-00	CERAMIC	0.01MF		50V	
C110	1-123-332-00	ELECT	47MF	20%	16V	
C111	1-102-934-00	CERAMIC	1PF	0.25PF	50V	
C112	1-102-934-00	CERAMIC	1PF	0.25PF	50V	
C113	1-161-021-11	CERAMIC	0.047MF	10%	25V	
C114	1-124-631-11	ELECT	47MF	20%	16V	
C115	1-101-004-00	CERAMIC	0.01MF		50V	
C116	1-123-332-00	ELECT	47MF	20%	16V	
C117	1-102-934-00	CERAMIC	1PF	0.25PF	50V	
C118	1-102-934-00	CERAMIC	1PF	0.25PF	50V	
C128	1-124-963-11	ELECT	33MF	20%	16V	
C129	1-101-004-00	CERAMIC	0.01MF		50V	
C130	1-101-004-00	CERAMIC	0.01MF		50V	
C131	1-124-963-11	ELECT	33MF	20%	16V	
C132	1-124-963-11	ELECT	33MF	20%	16V	
C133	1-101-004-00	CERAMIC	0.01MF		50V	
C134	1-101-004-00	CERAMIC	0.01MF		50V	
C135	1-124-963-11	ELECT	33MF	20%	16V	
C136	1-124-963-11	ELECT	33MF	20%	16V	
C137	1-101-004-00	CERAMIC	0.01MF		50V	
C138	1-101-004-00	CERAMIC	0.01MF		50V	
C139	1-124-963-11	ELECT	33MF	20%	16V	
		TRIMMER				
CV101	1-141-178-00	CAP, TRIMMER				
CV102	1-141-178-00	CAP, TRIMMER				
CV103	1-141-178-00	CAP, TRIMMER				
		TRANSISTOR				
Q101	8-729-105-88	TRANSISTOR 2SC2570A				
Q102	8-729-105-88	TRANSISTOR 2SC2570A				
Q103	8-729-103-19	TRANSISTOR 2SA1206-K1				
Q104	8-729-105-88	TRANSISTOR 2SC2570A				
Q105	8-729-105-88	TRANSISTOR 2SC2570A				
Q106	8-729-105-88	TRANSISTOR 2SC2570A				
Q107	8-729-105-88	TRANSISTOR 2SC2570A				
Q108	8-729-103-19	TRANSISTOR 2SA1206-K1				
Q109	8-729-105-88	TRANSISTOR 2SC2570A				
Q110	8-729-105-88	TRANSISTOR 2SC2570A				
Q111	8-729-105-88	TRANSISTOR 2SC2570A				
Q112	8-729-105-88	TRANSISTOR 2SC2570A				
Q113	8-729-103-19	TRANSISTOR 2SA1206-K1				
Q114	8-729-105-88	TRANSISTOR 2SC2570A				
Q115	8-729-105-88	TRANSISTOR 2SC2570A				
		CONNECTOR				
QB1	*1-564-464-11	CONNECTOR (LIGHT ANGLE) 15P				
		RESISTOR				
R101	1-249-417-11	CARBON	1K	5%	1/4W	
R102	1-249-417-11	CARBON	1K	5%	1/4W	
R103	1-215-440-00	METAL	6.2K	1%	1/6W	
R104	1-215-447-00	METAL	12K	1%	1/6W	
R105	1-215-445-00	METAL	10K	1%	1/6W	
R106	1-215-448-00	METAL	13K	1%	1/6W	
R107	1-215-429-00	METAL	2.2K	1%	1/6W	
R108	1-215-421-00	METAL	1K	1%	1/6W	
R109	1-215-437-00	METAL	4.7K	1%	1/6W	
R110	1-249-405-11	CARBON	100	5%	1/4W	
R111	1-215-397-00	METAL	100	1%	1/6W	
R112	1-249-420-11	CARBON	1.8K	5%	1/4W	
R113	1-215-421-00	METAL	1K	1%	1/6W	
R114	1-249-417-11	CARBON	1K	5%	1/4W	
R115	1-249-417-11	CARBON	1K	5%	1/4W	
R116	1-215-440-00	METAL	6.2K	1%	1/6W	
R117	1-215-447-00	METAL	12K	1%	1/6W	
R118	1-215-445-00	METAL	10K	1%	1/6W	
R119	1-215-448-00	METAL	13K	1%	1/6W	
R120	1-215-429-00	METAL	2.2K	1%	1/6W	
R121	1-215-421-00	METAL	1K	1%	1/6W	
R122	1-215-437-00	METAL	4.7K	1%	1/6W	
R123	1-249-405-11	CARBON	100	5%	1/4W	
R124	1-215-397-00	METAL	100	1%	1/6W	
R125	1-249-420-11	CARBON	1.8K	5%	1/4W	
R126	1-215-421-00	METAL	1K	1%	1/6W	
R127	1-249-417-11	CARBON	1K	5%	1/4W	
R128	1-249-417-11	CARBON	1K	5%	1/4W	
R129	1-215-440-00	METAL	6.2K	1%	1/6W	
R130	1-215-447-00	METAL	12K	1%	1/6W	
R131	1-215-445-00	METAL	10K	1%	1/6W	
R132	1-215-448-00	METAL	13K	1%	1/6W	
R133	1-215-429-00	METAL	2.2K	1%	1/6W	
R134	1-215-421-00	METAL	1K	1%	1/6W	
R135	1-215-437-00	METAL	4.7K	1%	1/6W	
R136	1-249-405-11	CARBON	100	5%	1/4W	
R137	1-215-397-00	METAL	100	1%	1/6W	
R138	1-249-420-11	CARBON	1.8K	5%	1/4W	
R139	1-215-421-00	METAL	1K	1%	1/6W	
R140	1-249-405-11	CARBON	100	5%	1/4W	
R141	1-249-405-11	CARBON	100	5%	1/4W	
R142	1-249-405-11	CARBON	100	5%	1/4W	
R143	1-249-405-11	CARBON	100	5%	1/4W	
R144	1-249-405-11	CARBON	100	5%	1/4W	
R145	1-249-405-11	CARBON	100	5%	1/4W	
R146	1-247-804-11	CARBON	75	5%	1/4W	

QB BB

Ref.No.	Part No.	Description				Remark
R147	1-247-804-11	CARBON	75	5%	1/4W	
R148	1-247-804-11	CARBON	75	5%	1/4W	
		VARIABLE RESISTOR				
RV101	1-237-516-21	RES, ADJ, CERMET 2K				
RV102	1-237-516-21	RES, ADJ, CERMET 2K				
RV103	1-237-516-21	RES, ADJ, CERMET 2K				
**********						
	*A-1296-450-A	BB BOARD, COMPLETE				
		**********				
	*4-353-708-00	HOOK, FINGER				
		CONNECTOR				
BB1	*1-562-729-11	CONNECTOR, MULTI 64P				
	4-378-915-01	NUT (M2.6), PLATE; BB1				
		CAPACITOR				
C1	1-101-004-00	CERAMIC	0.01MF		50V	
C2	1-124-499-11	ELECT	1MF	20%	50V	
C3	1-101-888-00	CERAMIC	68PF	5%	50V	
C4	1-126-233-11	ELECT	22MF	20%	25V	
C5	1-101-004-00	CERAMIC	0.01MF		50V	
C6	1-124-499-11	ELECT	1MF	20%	50V	
C7	1-101-004-00	CERAMIC	0.01MF		50V	
C8	1-124-499-11	ELECT	1MF	20%	50V	
C9	1-102-972-00	CERAMIC	91PF	5%	50V	
C10	1-101-004-00	CERAMIC	0.01MF		50V	
C11	1-101-004-00	CERAMIC	0.01MF		50V	
C12	1-102-944-00	CERAMIC	7PF	1PF	50V	
C13	1-126-233-11	ELECT	22MF	20%	25V	
C14	1-101-004-00	CERAMIC	0.01MF		50V	
C15	1-101-004-00	CERAMIC	0.01MF		50V	
C16	1-101-888-00	CERAMIC	68PF	5%	50V	
C17	1-126-233-11	ELECT	22MF	20%	25V	
C18	1-101-004-00	CERAMIC	0.01MF		50V	
C19	1-101-004-00	CERAMIC	0.01MF		50V	
C20	1-102-972-00	CERAMIC	91PF	5%	50V	
C21	1-102-944-00	CERAMIC	7PF	1PF	50V	
C22	1-126-233-11	ELECT	22MF	20%	25V	
C23	1-101-004-00	CERAMIC	0.01MF		50V	
C24	1-101-888-00	CERAMIC	68PF	5%	50V	
C25	1-126-233-11	ELECT	22MF	20%	25V	
C26	1-101-004-00	CERAMIC	0.01MF		50V	
C27	1-101-004-00	CERAMIC	0.01MF		50V	
C28	1-102-972-00	CERAMIC	91PF	5%	50V	
C29	1-102-944-00	CERAMIC	7PF	1PF	50V	
C30	1-126-233-11	ELECT	22MF	20%	25V	
C31	1-102-935-00	CERAMIC	2PF	0.25PF	50V	
C32	1-101-888-00	CERAMIC	68PF	5%	50V	
C33	1-126-233-11	ELECT	22MF	20%	25V	
C34	1-124-277-11	ELECT	4.7MF	20%	35V	
C35	1-124-478-11	ELECT	100MF	20%	25V	
C36	1-126-233-11	ELECT	22MF	20%	25V	
C37	1-124-477-11	ELECT	47MF	20%	25V	
C38	1-124-120-11	ELECT	220MF	20%	16V	
C39	1-101-004-00	CERAMIC	0.01MF		50V	
C40	1-124-477-11	ELECT	47MF	20%	25V	
C41	1-101-004-00	CERAMIC	0.01MF		50V	
C42	1-124-477-11	ELECT	47MF	20%	25V	
C43	1-126-233-11	ELECT	22MF	20%	25V	

Ref.No.	Part No.	Description			Remark
C44	1-101-004-00	CERAMIC	0.01MF		50V
C45	1-124-477-11	ELECT	47MF	20%	25V
C46	1-124-120-11	ELECT	220MF	20%	16V
C47	1-101-004-00	CERAMIC	0.01MF		50V
C48	1-124-477-11	ELECT	47MF	20%	25V
C49	1-124-477-11	ELECT	47MF	20%	25V
C50	1-101-004-00	CERAMIC	0.01MF		50V
C51	1-124-477-11	ELECT	47MF	20%	25V
C52	1-126-233-11	ELECT	22MF	20%	25V
C53	1-101-004-00	CERAMIC	0.01MF		50V
C54	1-124-477-11	ELECT	47MF	20%	25V
C55	1-101-004-00	CERAMIC	0.01MF		50V
C56	1-126-233-11	ELECT	22MF	20%	25V
C57	1-126-233-11	ELECT	22MF	20%	25V
C58	1-126-233-11	ELECT	22MF	20%	25V
C59	1-126-233-11	ELECT	22MF	20%	25V
C60	1-126-233-11	ELECT	22MF	20%	25V
C61	1-126-233-11	ELECT	22MF	20%	25V
C62	1-126-233-11	ELECT	22MF	20%	25V
C63	1-126-233-11	ELECT	22MF	20%	25V
C64	1-126-233-11	ELECT	22MF	20%	25V
C65	1-126-233-11	ELECT	22MF	20%	25V
C66	1-126-233-11	ELECT	22MF	20%	25V
C67	1-126-233-11	ELECT	22MF	20%	25V
C68	1-126-233-11	ELECT	22MF	20%	25V
C69	1-126-233-11	ELECT	22MF	20%	25V
C70	1-126-233-11	ELECT	22MF	20%	25V
C71	1-126-233-11	ELECT	22MF	20%	25V
C72	1-126-233-11	ELECT	22MF	20%	25V
C73	1-126-233-11	ELECT	22MF	20%	25V
C74	1-126-233-11	ELECT	22MF	20%	25V
C75	1-126-233-11	ELECT	22MF	20%	25V
C76	1-101-004-00	CERAMIC	0.01MF		50V
C77	1-101-004-00	CERAMIC	0.01MF		50V
C78	1-101-004-00	CERAMIC	0.01MF		50V
C79	1-101-004-00	CERAMIC	0.01MF		50V
C80	1-101-004-00	CERAMIC	0.01MF		50V
C81	1-101-004-00	CERAMIC	0.01MF		50V
C82	1-101-004-00	CERAMIC	0.01MF		50V
C83	1-101-004-00	CERAMIC	0.01MF		50V
C84	1-101-004-00	CERAMIC	0.01MF		50V
C85	1-101-004-00	CERAMIC	0.01MF		50V
C86	1-101-004-00	CERAMIC	0.01MF		50V
C87	1-101-004-00	CERAMIC	0.01MF		50V
C88	1-101-004-00	CERAMIC	0.01MF		50V
C89	1-101-004-00	CERAMIC	0.01MF		50V
C90	1-101-004-00	CERAMIC	0.01MF		50V
C91	1-124-285-91	ELECT	22MF	20%	16V
C92	1-124-285-91	ELECT	22MF	20%	16V
C93	1-124-285-91	ELECT	22MF	20%	16V
C94	1-124-285-91	ELECT	22MF	20%	16V
C95	1-124-285-91	ELECT	22MF	20%	16V
C96	1-124-285-91	ELECT	22MF	20%	16V
C97	1-124-285-91	ELECT	22MF	20%	16V
C98	1-124-285-91	ELECT	22MF	20%	16V
C99	1-124-285-91	ELECT	22MF	20%	16V
		DIODE			
D1	8-719-911-19	DIODE 1SS119			
D2	8-719-911-19	DIODE 1SS119			
D3	8-719-911-19	DIODE 1SS119			
D4	8-719-110-41	DIODE RD15ES-B2			
D5	8-719-911-19	DIODE 1SS119			

Ref.No.	Part No.	Description	Remark
D6	8-719-109-93	DIODE RD6.2ES-B2	
D7	8-719-110-41	DIODE RD15ES-B2	
D8	8-719-911-19	DIODE 1SS119	
D9	8-719-110-41	DIODE RD15ES-B2	
D10	8-719-110-13	DIODE RD9.1ES-B2	
D11	8-719-110-41	DIODE RD15ES-B2	
D12	8-719-109-93	DIODE RD6.2ES-B2	
D13	8-719-911-19	DIODE 1SS119	
D14	8-719-110-13	DIODE RD9.1ES-B2	
D15	8-719-109-93	DIODE RD6.2ES-B2	
D16	8-719-911-19	DIODE 1SS119	
D17	8-719-110-13	DIODE RD9.1ES-B2	
D18	8-719-911-19	DIODE 1SS119	
D19	8-719-110-13	DIODE RD9.1ES-B2	
D20	8-719-911-19	DIODE 1SS119	
D21	8-719-109-81	DIODE RD4.7ES-B2	
D22	8-719-110-17	DIODE RD10ES-B2	
D23	8-719-110-22	DIODE RD11ES-B2	
D24	8-719-109-89	DIODE RD5.6ES-B2	
D25	8-719-110-13	DIODE RD9.1ES-B2	
D26	8-719-110-17	DIODE RD10ES-B2	

DELAY LINE

DL1	1-415-466-11	DELAY LINE	
DL2	1-415-466-11	DELAY LINE	
DL3	1-415-466-11	DELAY LINE	
DL4	1-415-465-11	DELAY LINE	
DL5	1-415-465-11	DELAY LINE	
DL6	1-415-464-11	DELAY LINE	

IC

IC1	8-759-800-81	IC LA7016	
IC2	8-759-800-81	IC LA7016	
IC3	8-759-800-81	IC LA7016	
IC4	8-741-119-00	IC BX1190	
IC5	8-741-119-00	IC BX1190	
IC6	8-759-800-81	IC LA7016	
IC7	8-759-800-81	IC LA7016	
IC8	8-759-800-81	IC LA7016	
IC9	8-759-800-81	IC LA7016	
IC10	8-759-800-81	IC LA7016	
IC11	8-759-800-81	IC LA7016	

JACK

J1	1-560-914-00	POST, CONNECTOR 2P	
J1	*1-561-724-00	SOCKET, CONNECTOR 2P	
J2	1-560-914-00	POST, CONNECTOR 2P	
J2	*1-561-724-00	SOCKET, CONNECTOR 2P	

TRANSISTOR

Q1	8-729-103-19	TRANSISTOR 2SA1206-K1	
Q2	8-729-105-88	TRANSISTOR 2SC2570A	
Q3	8-729-105-88	TRANSISTOR 2SC2570A	
Q4	8-729-105-88	TRANSISTOR 2SC2570A	
Q5	8-729-103-19	TRANSISTOR 2SA1206-K1	
Q6	8-729-105-88	TRANSISTOR 2SC2570A	
Q7	8-729-105-88	TRANSISTOR 2SC2570A	
Q8	8-729-105-88	TRANSISTOR 2SC2570A	
Q9	8-729-103-19	TRANSISTOR 2SA1206-K1	
Q10	8-729-105-88	TRANSISTOR 2SC2570A	
Q11	8-729-105-88	TRANSISTOR 2SC2570A	
Q12	8-729-105-88	TRANSISTOR 2SC2570A	
Q13	8-729-103-19	TRANSISTOR 2SA1206-K1	
Q14	8-729-105-88	TRANSISTOR 2SC2570A	
Q15	8-729-105-88	TRANSISTOR 2SC2570A	
Q16	8-729-105-88	TRANSISTOR 2SC2570A	
Q17	8-729-103-19	TRANSISTOR 2SA1206-K1	
Q18	8-729-105-88	TRANSISTOR 2SC2570A	
Q19	8-729-105-88	TRANSISTOR 2SC2570A	
Q20	8-729-105-88	TRANSISTOR 2SC2570A	
Q21	8-729-103-19	TRANSISTOR 2SA1206-K1	
Q22	8-729-105-88	TRANSISTOR 2SC2570A	
Q23	8-729-105-88	TRANSISTOR 2SC2570A	
Q24	8-729-105-88	TRANSISTOR 2SC2570A	
Q25	8-729-103-19	TRANSISTOR 2SA1206-K1	
Q26	8-729-103-19	TRANSISTOR 2SA1206-K1	
Q27	8-729-105-88	TRANSISTOR 2SC2570A	
Q28	8-729-103-19	TRANSISTOR 2SA1206-K1	
Q29	8-729-103-19	TRANSISTOR 2SA1206-K1	
Q30	8-729-105-88	TRANSISTOR 2SC2570A	
Q31	8-729-105-88	TRANSISTOR 2SC2570A	
Q32	8-729-105-88	TRANSISTOR 2SC2570A	
Q33	8-729-105-88	TRANSISTOR 2SC2570A	
Q34	8-729-103-19	TRANSISTOR 2SA1206-K1	
Q35	8-729-105-88	TRANSISTOR 2SC2570A	
Q36	8-729-105-88	TRANSISTOR 2SC2570A	
Q37	8-729-378-84	TRANSISTOR 2SD788	
Q38	8-729-378-84	TRANSISTOR 2SD788	
Q39	8-729-119-76	TRANSISTOR 2SA1175-HFE	
Q40	8-729-119-78	TRANSISTOR 2SC2785-HFE	
Q41	8-729-373-92	TRANSISTOR 2SB739	
Q42	8-729-373-92	TRANSISTOR 2SB739	
Q43	8-729-119-76	TRANSISTOR 2SA1175-HFE	

RESISTOR

R1	1-249-435-11	CARBON	33K	5%	1/4W	
R2	1-249-429-11	CARBON	10K	5%	1/4W	
R3	1-249-405-11	CARBON	100	5%	1/4W	
R4	1-249-405-11	CARBON	100	5%	1/4W	
R5	1-249-427-11	CARBON	6.8K	5%	1/4W	
R6	1-249-405-11	CARBON	100	5%	1/4W	
R7	1-249-405-11	CARBON	100	5%	1/4W	
R8	1-249-435-11	CARBON	33K	5%	1/4W	
R9	1-249-423-11	CARBON	3.3K	5%	1/4W	
R10	1-249-405-11	CARBON	100	5%	1/4W	
R11	1-249-405-11	CARBON	100	5%	1/4W	
R12	1-249-405-11	CARBON	100	5%	1/4W	
R13	1-249-421-11	CARBON	2.2K	5%	1/4W	
R14	1-215-421-00	METAL	1K	1%	1/6W	
R15	1-249-405-11	CARBON	100	5%	1/4W	
R16	1-215-439-00	METAL	5.6K	1%	1/6W	
R17	1-215-459-00	METAL	39K	1%	1/6W	
R18	1-215-421-00	METAL	1K	1%	1/6W	
R19	1-249-437-11	CARBON	47K	5%	1/4W	
R20	1-215-413-00	METAL	470	1%	1/6W	
R21	1-215-384-00	METAL	30	1%	1/6W	
R22	1-215-407-00	METAL	270	1%	1/6W	
R25	1-215-429-00	METAL	2.2K	1%	1/6W	
R26	1-215-443-00	METAL	8.2K	1%	1/6W	
R27	1-249-405-11	CARBON	100	5%	1/4W	
R28	1-215-413-00	METAL	470	1%	1/6W	
R29	1-249-417-11	CARBON	1K	5%	1/4W	
R30	1-249-405-11	CARBON	100	5%	1/4W	
R31	1-249-421-11	CARBON	2.2K	5%	1/4W	

BB

Ref.No.	Part No.	Description				Remark
R32	1-249-405-11	CARBON	100	5%	1/4W	
R33	1-249-405-11	CARBON	100	5%	1/4W	
R34	1-249-427-11	CARBON	6.8K	5%	1/4W	
R35	1-249-405-11	CARBON	100	5%	1/4W	
R36	1-249-435-11	CARBON	33K	5%	1/4W	
R37	1-249-405-11	CARBON	100	5%	1/4W	
R38	1-215-429-00	METAL	2.2K	1%	1/6W	
R39	1-249-405-11	CARBON	100	5%	1/4W	
R40	1-249-405-11	CARBON	100	5%	1/4W	
R41	1-249-405-11	CARBON	100	5%	1/4W	
R42	1-249-418-11	CARBON	1.2K	5%	1/4W	
R43	1-215-397-00	METAL	100	1%	1/6W	
R44	1-215-397-00	METAL	100	1%	1/6W	
R45	1-249-405-11	CARBON	100	5%	1/4W	
R46	1-249-405-11	CARBON	100	5%	1/4W	
R47	1-249-427-11	CARBON	6.8K	5%	1/4W	
R48	1-249-405-11	CARBON	100	5%	1/4W	
R49	1-249-435-11	CARBON	33K	5%	1/4W	
R50	1-249-431-11	CARBON	15K	5%	1/4W	
R51	1-215-405-00	METAL	220	1%	1/6W	
R52	1-215-411-00	METAL	390	1%	1/6W	
R53	1-215-429-00	METAL	2.2K	1%	1/6W	
R55	1-249-405-11	CARBON	100	5%	1/4W	
R56	1-215-415-00	METAL	560	1%	1/6W	
R57	1-249-405-11	CARBON	100	5%	1/4W	
R58	1-249-405-11	CARBON	100	5%	1/4W	
R59	1-249-421-11	CARBON	2.2K	5%	1/4W	
R60	1-215-393-00	METAL	68	1%	1/6W	
R61	1-249-429-11	CARBON	10K	5%	1/4W	
R62	1-249-405-11	CARBON	100	5%	1/4W	
R63	1-215-394-00	METAL	75	1%	1/6W	
R64	1-249-405-11	CARBON	100	5%	1/4W	
R65	1-249-427-11	CARBON	6.8K	5%	1/4W	
R66	1-249-405-11	CARBON	100	5%	1/4W	
R67	1-249-435-11	CARBON	33K	5%	1/4W	
R68	1-249-405-11	CARBON	100	5%	1/4W	
R69	1-249-423-11	CARBON	3.3K	5%	1/4W	
R70	1-249-405-11	CARBON	100	5%	1/4W	
R71	1-249-405-11	CARBON	100	5%	1/4W	
R72	1-249-405-11	CARBON	100	5%	1/4W	
R73	1-249-421-11	CARBON	2.2K	5%	1/4W	
R74	1-249-437-11	CARBON	47K	5%	1/4W	
R75	1-215-413-00	METAL	470	1%	1/6W	
R76	1-215-393-00	METAL	68	1%	1/6W	
R77	1-215-420-00	METAL	910	1%	1/6W	
R78	1-215-391-00	METAL	56	1%	1/6W	
R79	1-215-428-00	METAL	2K	1%	1/6W	
R80	1-215-429-00	METAL	2.2K	1%	1/6W	
R81	1-215-443-00	METAL	8.2K	1%	1/6W	
R82	1-249-405-11	CARBON	100	5%	1/4W	
R83	1-215-413-00	METAL	470	1%	1/6W	
R84	1-249-417-11	CARBON	1K	5%	1/4W	
R85	1-249-405-11	CARBON	100	5%	1/4W	
R86	1-249-421-11	CARBON	2.2K	5%	1/4W	
R87	1-249-405-11	CARBON	100	5%	1/4W	
R88	1-249-405-11	CARBON	100	5%	1/4W	
R89	1-249-405-11	CARBON	100	5%	1/4W	
R90	1-249-405-11	CARBON	100	5%	1/4W	
R91	1-215-429-00	METAL	2.2K	1%	1/6W	
R92	1-249-405-11	CARBON	100	5%	1/4W	
R93	1-249-405-11	CARBON	100	5%	1/4W	
R94	1-249-405-11	CARBON	100	5%	1/4W	
R95	1-249-418-11	CARBON	1.2K	5%	1/4W	
R96	1-215-397-00	METAL	100	1%	1/6W	
R97	1-215-397-00	METAL	100	1%	1/6W	
R98	1-249-405-11	CARBON	100	5%	1/4W	
R99	1-249-405-11	CARBON	100	5%	1/4W	
R100	1-249-405-11	CARBON	100	5%	1/4W	
R101	1-249-431-11	CARBON	15K	5%	1/4W	
R102	1-215-405-00	METAL	220	1%	1/6W	
R103	1-215-411-00	METAL	390	1%	1/6W	
R104	1-215-429-00	METAL	2.2K	1%	1/6W	
R106	1-249-405-11	CARBON	100	5%	1/4W	
R107	1-215-415-00	METAL	560	1%	1/6W	
R108	1-249-405-11	CARBON	100	5%	1/4W	
R109	1-249-405-11	CARBON	100	5%	1/4W	
R110	1-249-421-11	CARBON	2.2K	5%	1/4W	
R111	1-215-393-00	METAL	68	1%	1/6W	
R112	1-249-429-11	CARBON	10K	5%	1/4W	
R113	1-249-405-11	CARBON	100	5%	1/4W	
R114	1-249-405-11	CARBON	100	5%	1/4W	
R115	1-249-405-11	CARBON	100	5%	1/4W	
R116	1-249-405-11	CARBON	100	5%	1/4W	
R117	1-249-423-11	CARBON	3.3K	5%	1/4W	
R118	1-249-405-11	CARBON	100	5%	1/4W	
R119	1-249-405-11	CARBON	100	5%	1/4W	
R120	1-249-405-11	CARBON	100	5%	1/4W	
R121	1-249-421-11	CARBON	2.2K	5%	1/4W	
R122	1-215-421-00	METAL	1K	1%	1/6W	
R123	1-249-405-11	CARBON	100	5%	1/4W	
R124	1-215-439-00	METAL	5.6K	1%	1/6W	
R125	1-215-459-00	METAL	39K	1%	1/6W	
R126	1-215-421-00	METAL	1K	1%	1/6W	
R127	1-249-437-11	CARBON	47K	5%	1/4W	
R128	1-215-413-00	METAL	470	1%	1/6W	
R131	1-215-379-00	METAL	18	1%	1/6W	
R132	1-215-406-00	METAL	240	1%	1/6W	
R133	1-215-429-00	METAL	2.2K	1%	1/6W	
R134	1-215-443-00	METAL	8.2K	1%	1/6W	
R135	1-249-405-11	CARBON	100	5%	1/4W	
R136	1-215-413-00	METAL	470	1%	1/6W	
R137	1-249-417-11	CARBON	1K	5%	1/4W	
R138	1-249-405-11	CARBON	100	5%	1/4W	
R139	1-249-421-11	CARBON	2.2K	5%	1/4W	
R140	1-249-405-11	CARBON	100	5%	1/4W	
R141	1-249-405-11	CARBON	100	5%	1/4W	
R142	1-249-405-11	CARBON	100	5%	1/4W	
R143	1-249-405-11	CARBON	100	5%	1/4W	
R144	1-215-429-00	METAL	2.2K	1%	1/6W	
R145	1-249-405-11	CARBON	100	5%	1/4W	
R146	1-249-405-11	CARBON	100	5%	1/4W	
R147	1-249-405-11	CARBON	100	5%	1/4W	
R148	1-249-418-11	CARBON	1.2K	5%	1/4W	
R149	1-215-397-00	METAL	100	1%	1/6W	
R150	1-215-397-00	METAL	100	1%	1/6W	
R151	1-249-405-11	CARBON	100	5%	1/4W	
R152	1-249-405-11	CARBON	100	5%	1/4W	
R153	1-249-405-11	CARBON	100	5%	1/4W	
R154	1-249-431-11	CARBON	15K	5%	1/4W	
R155	1-215-405-00	METAL	220	1%	1/6W	
R156	1-215-411-00	METAL	390	1%	1/6W	
R157	1-215-429-00	METAL	2.2K	1%	1/6W	
R159	1-249-405-11	CARBON	100	5%	1/4W	
R160	1-215-415-00	METAL	560	1%	1/6W	
R161	1-249-405-11	CARBON	100	5%	1/4W	
R162	1-249-405-11	CARBON	100	5%	1/4W	
R163	1-249-421-11	CARBON	2.2K	5%	1/4W	
R164	1-215-393-00	METAL	68	1%	1/6W	
R165	1-215-405-00	METAL	220	1%	1/6W	
R166	1-215-429-00	METAL	2.2K	1%	1/6W	

Ref.No.	Part No.	Description				Remark
R167	1-215-401-11	METAL	150	1%	1/6W	
R168	1-215-401-11	METAL	150	1%	1/6W	
R169	1-215-421-00	METAL	1K	1%	1/6W	
R170	1-215-429-00	METAL	2.2K	1%	1/6W	
R171	1-215-455-00	METAL	27K	1%	1/6W	
R172	1-215-415-00	METAL	560	1%	1/6W	
R173	1-215-429-00	METAL	2.2K	1%	1/6W	
R174	1-249-405-11	CARBON	100	5%	1/4W	
R175	1-249-401-11	CARBON	47	5%	1/4W	
R176	1-249-426-11	CARBON	5.6K	5%	1/4W	
R177	1-249-411-11	CARBON	330	5%	1/4W	
R178	1-249-437-11	CARBON	47K	5%	1/4W	
R179	1-249-423-11	CARBON	3.3K	5%	1/4W	
R180	1-249-405-11	CARBON	100	5%	1/4W	
R181	1-249-405-11	CARBON	100	5%	1/4W	
R182	1-249-405-11	CARBON	100	5%	1/4W	
R183	1-249-421-11	CARBON	2.2K	5%	1/4W	
R184	1-249-405-11	CARBON	100	5%	1/4W	
R185	1-249-415-11	CARBON	680	5%	1/4W	
R186	1-249-405-11	CARBON	100	5%	1/4W	
R187	1-215-397-00	METAL	100	1%	1/6W	
R188	1-215-397-00	METAL	100	1%	1/6W	
R189	1-249-405-11	CARBON	100	5%	1/4W	
R190	1-249-423-11	CARBON	3.3K	5%	1/4W	
R191	1-249-405-11	CARBON	100	5%	1/4W	
R192	1-249-405-11	CARBON	100	5%	1/4W	
R193	1-249-405-11	CARBON	100	5%	1/4W	
R194	1-249-415-11	CARBON	680	5%	1/4W	
R195	1-215-397-00	METAL	100	1%	1/6W	
R196	1-215-397-00	METAL	100	1%	1/6W	
R197	1-249-405-11	CARBON	100	5%	1/4W	
R198	1-249-405-11	CARBON	100	5%	1/4W	
R199	1-249-421-11	CARBON	2.2K	5%	1/4W	
R200	1-215-428-00	METAL	2K	1%	1/6W	
R201	1-215-407-00	METAL	270	1%	1/6W	
R202	1-215-441-00	METAL	6.8K	1%	1/6W	
R203	1-215-437-00	METAL	4.7K	1%	1/6W	
R204	1-249-401-11	CARBON	47	5%	1/4W	
R205	1-215-419-00	METAL	820	1%	1/6W	
R206	1-215-413-00	METAL	470	1%	1/6W	
R207	1-215-453-00	METAL	22K	1%	1/6W	
R208	1-215-433-00	METAL	3.3K	1%	1/6W	
R209	1-249-405-11	CARBON	100	5%	1/4W	
R210	1-249-405-11	CARBON	100	5%	1/4W	
R211	1-215-429-00	METAL	2.2K	1%	1/6W	
R212	1-215-405-00	METAL	220	1%	1/6W	
R213	1-215-391-00	METAL	56	1%	1/6W	
R214	1-215-413-00	METAL	470	1%	1/6W	
R215	1-215-417-00	METAL	680	1%	1/6W	
R216	1-249-405-11	CARBON	100	5%	1/4W	
R217	1-249-405-11	CARBON	100	5%	1/4W	
R218	1-249-422-11	CARBON	2.7K	5%	1/4W	
R219	1-215-397-00	METAL	100	1%	1/6W	
R220	1-215-397-00	METAL	100	1%	1/6W	
R221	1-249-422-11	CARBON	2.7K	5%	1/4W	
R222	1-247-736-11	CARBON	56	5%	1/2W	
R223	1-249-417-11	CARBON	1K	5%	1/4W	
R224	1-249-438-11	CARBON	56K	5%	1/4W	
R225	1-249-426-11	CARBON	5.6K	5%	1/4W	
R226	1-249-437-11	CARBON	47K	5%	1/4W	
R227	1-249-417-11	CARBON	1K	5%	1/4W	
R228	1-247-731-11	CARBON	22	5%	1/2W	
R229	1-249-417-11	CARBON	1K	5%	1/4W	
R230	1-249-441-11	CARBON	100K	5%	1/4W	
R231	1-249-441-11	CARBON	100K	5%	1/4W	

Ref.No.	Part No.	Description				Remark
R232	1-215-419-00	METAL	820	1%	1/6W	
R233	1-215-455-00	METAL	27K	1%	1/6W	
R236	1-215-415-00	METAL	560	1%	1/6W	
R237	1-215-432-00	METAL	3K	1%	1/6W	
R239	1-249-409-11	CARBON	220	5%	1/4W	
R240	1-249-438-11	CARBON	56K	5%	1/4W	
R241	1-249-438-11	CARBON	56K	5%	1/4W	
R242	1-249-438-11	CARBON	56K	5%	1/4W	
R243	1-249-438-11	CARBON	56K	5%	1/4W	
R244	1-249-438-11	CARBON	56K	5%	1/4W	
R245	1-249-438-11	CARBON	56K	5%	1/4W	
R246	1-249-438-11	CARBON	56K	5%	1/4W	
R247	1-249-438-11	CARBON	56K	5%	1/4W	
R248	1-249-438-11	CARBON	56K	5%	1/4W	
R249	1-249-409-11	CARBON	220	5%	1/4W	

VARIABLE RESISTOR

RV1	1-237-512-21	RES, ADJ, CERMET 100	
RV2	1-237-512-21	RES, ADJ, CERMET 100	
RV3	1-237-512-21	RES, ADJ, CERMET 100	
RV4	1-237-513-21	RES, ADJ, CERMET 200	
RV5	1-237-512-21	RES, ADJ, CERMET 100	
RV6	1-237-513-21	RES, ADJ, CERMET 200	
RV7	1-237-513-21	RES, ADJ, CERMET 200	
RV8	1-237-513-21	RES, ADJ, CERMET 200	
RV9	1-237-512-21	RES, ADJ, CERMET 100	
RV10	1-237-512-21	RES, ADJ, CERMET 100	
RV11	1-237-512-21	RES, ADJ, CERMET 100	

****

	*A-1296-451-A	BE BOARD, COMPLETE
		**********
	*4-353-708-00	HOOK, FINGER
	4-378-915-01	NUT (M2.6), PLATE

CONNECTOR

BE1	*1-562-729-11	CONNECTOR, MULTI 64P	

CAPACITOR

C1	1-124-472-11	ELECT	470MF	20%	6.3V
C2	1-124-120-11	ELECT	220MF	20%	16V
C3	1-161-202-91	CERAMIC	0.01MF	10%	25V
C4	1-124-120-11	ELECT	220MF	20%	16V
C5	1-161-202-91	CERAMIC	0.01MF	10%	25V
C6	1-124-120-11	ELECT	220MF	20%	16V
C7	1-124-120-11	ELECT	220MF	20%	16V
C8	1-161-206-91	CERAMIC	0.022MF	10%	25V
C9	1-161-202-91	CERAMIC	0.01MF	10%	25V
C10	1-101-884-00	CERAMIC	56PF	5%	50V
C11	1-161-202-91	CERAMIC	0.01MF	10%	25V
C12	1-124-120-11	ELECT	220MF	20%	16V
C13	1-101-880-00	CERAMIC	47PF	5%	50V
C14	1-102-816-00	CERAMIC	120PF	5%	50V
C15	1-102-980-00	CERAMIC	270PF	5%	50V
C16	1-102-959-00	CERAMIC	22PF	5%	50V
C17	1-130-475-00	MYLAR	0.0022MF	5%	50V
C18	1-161-202-91	CERAMIC	0.01MF	10%	25V
C19	1-161-202-91	CERAMIC	0.01MF	10%	25V
C20	1-161-202-91	CERAMIC	0.01MF	10%	25V
C21	1-161-202-91	CERAMIC	0.01MF	10%	25V
C22	1-161-202-91	CERAMIC	0.01MF	10%	25V

BE

Ref.No.	Part No.	Description				Remark
C23	1-161-202-91	CERAMIC	0.01MF	10%	25V	
C24	1-161-202-91	CERAMIC	0.01MF	10%	25V	
C25	1-161-202-91	CERAMIC	0.01MF	10%	25V	
C26	1-126-176-11	ELECT	220MF	20%	6.3V	
C27	1-161-202-91	CERAMIC	0.01MF	10%	25V	
C28	1-126-176-11	ELECT	220MF	20%	6.3V	
C29	1-161-202-91	CERAMIC	0.01MF	10%	25V	
C30	1-161-202-91	CERAMIC	0.01MF	10%	25V	
C31	1-136-165-00	FILM	0.1MF	5%	50V	
C32	1-136-165-00	FILM	0.1MF	5%	50V	
C34	1-124-499-11	ELECT	1MF	20%	50V	
C35	1-123-330-00	ELECT	22MF	20%	16V	
C36	1-126-101-11	ELECT	100MF	20%	16V	
C38	1-161-202-91	CERAMIC	0.01MF	10%	25V	
C39	1-161-202-91	CERAMIC	0.01MF	10%	25V	
C40	1-161-202-91	CERAMIC	0.01MF	10%	25V	
		DIODE				
D1	8-719-911-19	DIODE 1SS119				
D2	8-719-911-19	DIODE 1SS119				
D3	8-719-911-19	DIODE 1SS119				
D4	8-719-911-19	DIODE 1SS119				
D5	8-719-911-19	DIODE 1SS119				
D6	8-719-911-19	DIODE 1SS119				
D8	8-719-911-19	DIODE 1SS119				
D9	8-719-911-19	DIODE 1SS119				
		IC				
IC1	8-759-910-00	IC SN74S00N				
IC2	8-759-911-63	IC SN74S163N				
IC3	8-759-901-63	IC SN74LS163AN				
IC4	8-759-901-63	IC SN74LS163AN				
IC5	8-759-901-63	IC SN74LS163AN				
IC6	8-759-741-17	IC MB7138E-HSGH				
	*1-526-658-21	SOCKET, IC (DP) 24P; IC6				
IC7	8-759-913-74	IC SN74S374N				
IC8	8-759-901-63	IC SN74LS163AN				
IC9	8-759-901-63	IC SN74LS163AN				
IC10	8-759-901-63	IC SN74LS163AN				
IC11	8-759-741-18	IC MBM2764-VSGH				
	1-526-659-00	SOCKET, IC (DP) 28P; IC11				
IC12	8-759-901-75	IC SN74LS175N				
IC13	8-759-901-75	IC SN74LS175N				
IC14	8-759-974-06	IC SN7406N				
IC15	8-759-766-76	IC MB7053-PTD				
	*1-526-654-00	SOCKET, IC (DP) 16P; IC15				
IC16	8-759-901-37	IC SN74LS137N				
IC17	8-759-974-07	IC SN7407N				
IC18	8-759-901-61	IC SN74LS161AN				
IC19	8-759-766-77	IC MB7053-COMPB				
	*1-526-654-00	SOCKET, IC (DP) 16P; IC19				
IC20	8-759-901-75	IC SN74LS175N				
IC21	8-759-910-00	IC SN74S00N				
IC22	8-759-982-25	IC RC78L09A				
IC23	8-759-900-08	IC SN74LS08N				
IC24	8-759-900-32	IC SN74LS32N				
IC25	8-759-900-00	IC SN74LS00N				
IC26	8-759-900-86	IC SN74LS86N				
IC27	8-759-900-08	IC SN74LS08N				

Ref.No.	Part No.	Description				Remark
		COIL				
L1	1-407-709-11	INDUCTOR	220UH			
L2	1-407-709-11	INDUCTOR	220UH			
		TRANSISTOR				
Q1	8-729-313-82	TRANSISTOR 2SD1138				
Q2	8-729-119-78	TRANSISTOR 2SC2785-HFE				
Q3	8-729-119-78	TRANSISTOR 2SC2785-HFE				
Q4	8-729-119-76	TRANSISTOR 2SA1175-HFE				
Q5	8-729-119-78	TRANSISTOR 2SC2785-HFE				
Q6	8-729-300-13	TRANSISTOR 2SC2471				
Q7	8-729-110-53	TRANSISTOR 2SA1005				
Q8	8-729-119-78	TRANSISTOR 2SC2785-HFE				
Q9	8-729-119-76	TRANSISTOR 2SA1175-HFE				
Q10	8-729-119-78	TRANSISTOR 2SC2785-HFE				
Q11	8-729-119-78	TRANSISTOR 2SC2785-HFE				
Q12	8-729-119-78	TRANSISTOR 2SC2785-HFE				
Q13	8-729-119-78	TRANSISTOR 2SC2785-HFE				
Q14	8-729-119-78	TRANSISTOR 2SC2785-HFE				
Q15	8-729-119-78	TRANSISTOR 2SC2785-HFE				
		RESISTOR				
R1	1-249-414-11	CARBON	560	5%	1/4W	
R2	1-249-417-11	CARBON	1K	5%	1/4W	
R3	1-249-417-11	CARBON	1K	5%	1/4W	
R4	1-249-429-11	CARBON	10K	5%	1/4W	
R5	1-249-429-11	CARBON	10K	5%	1/4W	
R6	1-249-429-11	CARBON	10K	5%	1/4W	
R7	1-249-429-11	CARBON	10K	5%	1/4W	
R8	1-249-429-11	CARBON	10K	5%	1/4W	
R9	1-249-417-11	CARBON	1K	5%	1/4W	
R10	1-249-429-11	CARBON	10K	5%	1/4W	
R11	1-249-429-11	CARBON	10K	5%	1/4W	
R12	1-249-429-11	CARBON	10K	5%	1/4W	
R13	1-249-429-11	CARBON	10K	5%	1/4W	
R14	1-249-429-11	CARBON	10K	5%	1/4W	
R15	1-249-405-11	CARBON	100	5%	1/4W	
R16	1-215-378-00	METAL	16	1%	1/6W	
R17	1-215-378-00	METAL	16	1%	1/6W	
R18	1-215-383-00	METAL	27	1%	1/6W	
R19	1-249-429-11	CARBON	10K	5%	1/4W	
R20	1-249-429-11	CARBON	10K	5%	1/4W	
R21	1-215-391-00	METAL	56	1%	1/6W	
R22	1-215-377-00	METAL	15	1%	1/6W	
R23	1-215-377-00	METAL	15	1%	1/6W	
R24	1-247-848-11	CARBON	5.1K	5%	1/4W	
R25	1-215-437-00	METAL	4.7K	1%	1/6W	
R26	1-215-405-00	METAL	220	1%	1/6W	
R27	1-215-428-00	METAL	2K	1%	1/6W	
R28	1-247-773-91	CARBON	3.9	5%	1/4W	
R29	1-249-429-11	CARBON	10K	5%	1/4W	
R30	1-247-804-11	CARBON	75	5%	1/4W	
R31	1-249-429-11	CARBON	10K	5%	1/4W	
R32	1-247-773-91	CARBON	3.9	5%	1/4W	
R33	1-249-429-11	CARBON	10K	5%	1/4W	
R34	1-215-441-00	METAL	6.8K	1%	1/6W	
R35	1-249-429-11	CARBON	10K	5%	1/4W	
R36	1-247-804-11	CARBON	75	5%	1/4W	
R37	1-247-773-91	CARBON	3.9	5%	1/4W	
R38	1-247-773-91	CARBON	3.9	5%	1/4W	
R39	1-249-411-11	CARBON	330	5%	1/4W	
R40	1-249-411-11	CARBON	330	5%	1/4W	

Ref.No.	Part No.	Description				Remark
R41	1-249-435-11	CARBON	33K	5%	1/4W	
R42	1-249-405-11	CARBON	100	5%	1/4W	
R44	1-215-399-00	METAL	120	1%	1/6W	
R45	1-215-431-00	METAL	2.7K	1%	1/6W	
R46	1-215-455-00	METAL	27K	1%	1/6W	
R47	1-215-421-00	METAL	1K	1%	1/6W	
R48	1-215-441-00	METAL	6.8K	1%	1/6W	
R49	1-215-413-00	METAL	470	1%	1/6W	
R50	1-215-441-00	METAL	6.8K	1%	1/6W	
R51	1-215-421-00	METAL	1K	1%	1/6W	
R52	1-215-431-00	METAL	2.7K	1%	1/6W	
R53	1-215-415-00	METAL	560	1%	1/6W	
R54	1-215-433-00	METAL	3.3K	1%	1/6W	
R55	1-249-413-11	CARBON	470	5%	1/4W	
R56	1-215-427-00	METAL	1.8K	1%	1/6W	
R57	1-249-421-11	CARBON	2.2K	5%	1/4W	
R58	1-249-421-11	CARBON	2.2K	5%	1/4W	
R61	1-249-425-11	CARBON	4.7K	5%	1/4W	
		RESISTOR BLOCK				
RB1	1-231-407-00	RESISTOR BLOCK 2.2K				
RB2	1-231-407-00	RESISTOR BLOCK 2.2K				
		VARIABLE RESISTOR				
RV1	1-237-518-21	RES, ADJ, CERMET 10K				
		CRYSTAL				
X1	1-527-819-11	VIBRATOR, CRYSTAL				
**********						
	*A-1296-452-A	BF BOARD, COMPLETE				
		**********				
	*4-353-708-00	HOOK, FINGER				
		CONNECTOR				
BF1	*1-562-729-11	CONNECTOR, MULTI 64P				
	4-378-915-01	NUT (M2.6), PLATE; BF1				
		CAPACITOR				
C001	1-124-478-11	ELECT	100MF	20%	25V	
C002	1-101-004-00	CERAMIC	0.01MF		50V	
C003	1-124-478-11	ELECT	100MF	20%	25V	
C004	1-101-004-00	CERAMIC	0.01MF		50V	
C005	1-124-478-11	ELECT	100MF	20%	25V	
C006	1-124-478-11	ELECT	100MF	20%	25V	
C007	1-124-478-11	ELECT	100MF	20%	25V	
C008	1-101-004-00	CERAMIC	0.01MF		50V	
C009	1-124-478-11	ELECT	100MF	20%	25V	
C010	1-101-004-00	CERAMIC	0.01MF		50V	
C011	1-124-478-11	ELECT	100MF	20%	25V	
C012	1-101-004-00	CERAMIC	0.01MF		50V	
C013	1-101-004-00	CERAMIC	0.01MF		50V	
C014	1-101-004-00	CERAMIC	0.01MF		50V	
C015	1-101-004-00	CERAMIC	0.01MF		50V	
C017	1-101-004-00	CERAMIC	0.01MF		50V	
C019	1-101-004-00	CERAMIC	0.01MF		50V	
C020	1-101-004-00	CERAMIC	0.01MF		50V	
C101	1-124-477-11	ELECT	47MF	20%	25V	
C102	1-124-499-11	ELECT	1MF	20%	50V	

Ref.No.	Part No.	Description				Remark
C103	1-124-477-11	ELECT	47MF	20%	25V	
C104	1-102-824-00	CERAMIC	470PF	5%	50V	
C105	1-102-824-00	CERAMIC	470PF	5%	50V	
C106	1-124-477-11	ELECT	47MF	20%	25V	
C107	1-124-477-11	ELECT	47MF	20%	25V	
C108	1-101-004-00	CERAMIC	0.01MF		50V	
C109	1-124-120-11	ELECT	220MF	20%	25V	
C111	1-124-925-11	ELECT	2.2MF	20%	50V	
C112	1-126-233-11	ELECT	22MF	20%	25V	
C113	1-124-477-11	ELECT	47MF	20%	25V	
C115	1-124-477-11	ELECT	47MF	20%	25V	
C116	1-108-792-11	MYLAR	0.001MF	5%	50V	
C117	1-101-004-00	CERAMIC	0.01MF		50V	
C118	1-102-973-00	CERAMIC	100PF	5%	50V	
C119	1-101-004-00	CERAMIC	0.01MF		50V	
C120	1-124-477-11	ELECT	47MF	20%	25V	
C121	1-124-499-11	ELECT	1MF	20%	50V	
C122	1-102-978-00	CERAMIC	220PF	5%	50V	
C123	1-101-004-00	CERAMIC	0.01MF		50V	
C124	1-102-820-00	CERAMIC	330PF	5%	50V	
C125	1-101-004-00	CERAMIC	0.01MF		50V	
C126	1-101-880-00	CERAMIC	47PF	5%	50V	
C127	1-101-880-00	CERAMIC	47PF	5%	50V	
C128	1-124-006-11	ELECT	10MF	20%	25V	
C129	1-102-959-00	CERAMIC	22PF	5%	50V	
C130	1-102-498-91	CERAMIC	100PF	5%	50V	
C131	1-102-824-00	CERAMIC	470PF	5%	50V	
C132	1-102-824-00	CERAMIC	470PF	5%	50V	
C133	1-102-500-91	CERAMIC	150PF	5%	50V	
C134	1-102-498-91	CERAMIC	100PF	5%	50V	
C135	1-101-004-00	CERAMIC	0.01MF		50V	
C136	1-101-004-00	CERAMIC	0.01MF		50V	
C137	1-101-004-00	CERAMIC	0.01MF		50V	
C138	1-101-004-00	CERAMIC	0.01MF		50V	
C139	1-101-004-00	CERAMIC	0.01MF		50V	
C140	1-101-004-00	CERAMIC	0.01MF		50V	
C141	1-124-477-11	ELECT	47MF	20%	25V	
C142	1-136-173-00	FILM	0.47MF	5%	50V	
C201	1-102-820-00	CERAMIC	330PF	5%	50V	
C203	1-102-961-00	CERAMIC	27PF	5%	50V	
C204	1-102-498-91	CERAMIC	100PF	5%	50V	
C205	1-102-494-91	CERAMIC	68PF	5%	50V	
C206	1-102-498-91	CERAMIC	100PF	5%	50V	
C207	1-136-153-00	FILM	0.01MF	5%	50V	
C208	1-123-875-11	ELECT	10MF	20%	50V	
C209	1-101-004-00	CERAMIC	0.01MF		50V	
C210	1-101-004-00	CERAMIC	0.01MF		50V	
C211	1-101-004-00	CERAMIC	0.01MF		50V	
C212	1-101-004-00	CERAMIC	0.01MF		50V	
C213	1-101-004-00	CERAMIC	0.01MF		50V	
C214	1-101-004-00	CERAMIC	0.01MF		50V	
C215	1-124-477-11	ELECT	47MF	20%	25V	
C216	1-124-477-11	ELECT	47MF	20%	25V	
C221	1-102-980-00	CERAMIC	270PF	5%	50V	
C222	1-101-361-00	CERAMIC	150PF	5%	50V	
C301	1-102-820-00	CERAMIC	330PF	5%	50V	
C302	1-101-004-00	CERAMIC	0.01MF		50V	
C303	1-101-880-00	CERAMIC	47PF	5%	50V	
C304	1-101-880-00	CERAMIC	47PF	5%	50V	
C305	1-124-006-11	ELECT	10MF	20%	25V	
C306	1-124-277-11	ELECT	4.7MF	20%	35V	
C307	1-108-796-11	MYLAR	0.0022MF	5%	50V	
C308	1-108-796-11	MYLAR	0.0022MF	5%	50V	
C309	1-136-169-00	FILM	0.22MF	5%	50V	
C310	1-136-153-00	FILM	0.01MF	5%	50V	

BF

Ref.No.	Part No.	Description		Remark
C311	1-101-004-00	CERAMIC 0.01MF		50V
C312	1-101-004-00	CERAMIC 0.01MF		50V
C314	1-124-477-11	ELECT 47MF	20%	25V
C315	1-124-477-11	ELECT 47MF	20%	25V
C316	1-124-478-11	ELECT 100MF	20%	25V
C320	1-101-004-00	CERAMIC 0.01MF		50V
C351	1-101-001-00	CERAMIC 0.001MF		50V

DIODE

D002	8-719-911-19	DIODE 1SS119	
D004	8-719-911-19	DIODE 1SS119	
D005	8-719-911-19	DIODE 1SS119	
D006	8-719-911-19	DIODE 1SS119	
D007	8-719-911-19	DIODE 1SS119	
D008	8-719-911-19	DIODE 1SS119	
D009	8-719-911-19	DIODE 1SS119	
D011	8-719-911-19	DIODE 1SS119	
D101	8-719-911-19	DIODE 1SS119	
D102	8-719-911-19	DIODE 1SS119	
D103	8-719-911-19	DIODE 1SS119	
D104	8-719-911-19	DIODE 1SS119	
D105	8-719-911-19	DIODE 1SS119	
D106	8-719-911-19	DIODE 1SS119	
D107	8-719-911-19	DIODE 1SS119	
D108	8-719-911-19	DIODE 1SS119	
D110	8-719-109-89	DIODE RD5.6ES-B2	
D111	8-719-109-89	DIODE RD5.6ES-B2	
D112	8-719-109-89	DIODE RD5.6ES-B2	
D202	8-719-911-19	DIODE 1SS119	
D301	8-719-911-19	DIODE 1SS119	
D302	8-719-911-19	DIODE 1SS119	
D303	8-719-911-19	DIODE 1SS119	
D304	8-719-911-19	DIODE 1SS119	

IC

IC4	8-759-916-15	IC SN74HC05N
IC002	8-759-708-05	IC UPC78L05J
IC101	8-759-240-53	IC TC4053BP
IC102	8-759-014-96	IC MC1496P
IC103	8-759-203-83	IC TC74HC4538P
IC104	8-759-203-83	IC TC74HC4538P
IC105	8-759-202-93	IC TC74HC153P
IC106	8-759-203-83	IC TC74HC4538P
IC201	8-759-921-09	IC SN74HC36N
IC202	8-759-000-99	IC MC74HC74N
IC203	8-759-203-83	IC TC74HC4538P
IC204	8-759-203-83	IC TC74HC4538P
IC205	8-759-202-93	IC TC74HC153P
IC206	8-759-203-83	IC TC74HC4538P
IC301	8-759-202-93	IC TC74HC153P
IC302	8-759-203-83	IC TC74HC4538P

COIL

L001	1-408-429-00	INDUCTOR	470UH
L002	1-408-429-00	INDUCTOR	470UH

TRANSISTOR

Q002	8-729-900-80	TRANSISTOR DTC114ES
Q101	8-729-119-78	TRANSISTOR 2SC2785-HFE
Q102	8-729-119-78	TRANSISTOR 2SC2785-HFE
Q103	8-729-119-78	TRANSISTOR 2SC2785-HFE
Q104	8-729-119-78	TRANSISTOR 2SC2785-HFE
Q105	8-729-119-78	TRANSISTOR 2SC2785-HFE
Q106	8-729-119-78	TRANSISTOR 2SC2785-HFE
Q108	8-729-103-19	TRANSISTOR 2SA1206-K1
Q109	8-729-105-88	TRANSISTOR 2SC2570A
Q110	8-729-105-88	TRANSISTOR 2SC2570A
Q111	8-729-697-92	TRANSISTOR 2SA979
Q112	8-729-119-78	TRANSISTOR 2SC2785-HFE
Q113	8-729-119-76	TRANSISTOR 2SA1175-HFE
Q114	8-729-697-92	TRANSISTOR 2SA979
Q115	8-729-697-92	TRANSISTOR 2SA979
Q117	8-729-119-76	TRANSISTOR 2SA1175-HFE
Q118	8-729-119-78	TRANSISTOR 2SC2785-HFE
Q119	8-729-119-78	TRANSISTOR 2SC2785-HFE
Q120	8-729-119-76	TRANSISTOR 2SA1175-HFE
Q121	8-729-119-78	TRANSISTOR 2SC2785-HFE
Q122	8-729-119-78	TRANSISTOR 2SC2785-HFE
Q123	8-729-119-76	TRANSISTOR 2SA1175-HFE
Q124	8-729-119-78	TRANSISTOR 2SC2785-HFE
Q125	8-729-119-78	TRANSISTOR 2SC2785-HFE
Q126	8-729-119-76	TRANSISTOR 2SA1175-HFE
Q201	8-729-119-78	TRANSISTOR 2SC2785-HFE
Q202	8-729-119-78	TRANSISTOR 2SC2785-HFE
Q203	8-729-119-78	TRANSISTOR 2SC2785-HFE
Q204	8-729-201-04	TRANSISTOR 2SC2878
Q301	8-729-119-78	TRANSISTOR 2SC2785-HFE
Q302	8-729-119-78	TRANSISTOR 2SC2785-HFE
Q303	8-729-119-76	TRANSISTOR 2SA1175-HFE
Q304	8-729-119-78	TRANSISTOR 2SC2785-HFE
Q305	8-729-119-78	TRANSISTOR 2SC2785-HFE
Q306	8-729-119-76	TRANSISTOR 2SA1175-HFE
Q307	8-729-119-78	TRANSISTOR 2SC2785-HFE

RESISTOR

R001	1-249-441-11	CARBON	100K	5%	1/4W
R002	1-249-441-11	CARBON	100K	5%	1/4W
R003	1-249-441-11	CARBON	100K	5%	1/4W
R006	1-249-441-11	CARBON	100K	5%	1/4W
R008	1-249-417-11	CARBON	1K	5%	1/4W
R009	1-249-441-11	CARBON	100K	5%	1/4W
R010	1-249-437-11	CARBON	47K	5%	1/4W
R011	1-249-437-11	CARBON	47K	5%	1/4W
R012	1-249-437-11	CARBON	47K	5%	1/4W
R013	1-249-437-11	CARBON	47K	5%	1/4W
R015	1-249-437-11	CARBON	47K	5%	1/4W
R016	1-249-405-11	CARBON	100	5%	1/4W
R017	1-249-405-11	CARBON	100	5%	1/4W
R019	1-249-405-11	CARBON	100	5%	1/4W
R020	1-249-437-11	CARBON	47K	5%	1/4W
R021	1-249-437-11	CARBON	47K	5%	1/4W
R022	1-249-437-11	CARBON	47K	5%	1/4W
R023	1-249-437-11	CARBON	47K	5%	1/4W
R024	1-249-437-11	CARBON	47K	5%	1/4W
R101	1-249-410-11	CARBON	270	5%	1/4W
R102	1-215-469-00	METAL	100K	1%	1/6W
R103	1-249-405-11	CARBON	100	5%	1/4W
R104	1-215-464-00	METAL	62K	1%	1/6W
R105	1-249-405-11	CARBON	100	5%	1/4W
R106	1-249-426-11	CARBON	5.6K	5%	1/4W
R107	1-249-411-11	CARBON	330	5%	1/4W
R108	1-215-469-00	METAL	100K	1%	1/6W
R109	1-249-405-11	CARBON	100	5%	1/4W
R110	1-215-464-00	METAL	62K	1%	1/6W
R111	1-249-405-11	CARBON	100	5%	1/4W

Ref.No.	Part No.	Description				Remark
R112	1-249-426-11	CARBON	5.6K	5%	1/4W	
R113	1-249-425-11	CARBON	4.7K	5%	1/4W	
R114	1-215-469-00	METAL	100K	1%	1/6W	
R115	1-249-405-11	CARBON	100	5%	1/4W	
R116	1-215-464-00	METAL	62K	1%	1/6W	
R117	1-249-405-11	CARBON	100	5%	1/4W	
R118	1-249-426-11	CARBON	5.6K	5%	1/4W	
R119	1-249-399-11	CARBON	33	5%	1/4W	
R120	1-249-399-11	CARBON	33	5%	1/4W	
R121	1-249-428-11	CARBON	8.2K	5%	1/4W	
R122	1-249-429-11	CARBON	10K	5%	1/4W	
R123	1-249-427-11	CARBON	6.8K	5%	1/4W	
R124	1-249-405-11	CARBON	100	5%	1/4W	
R125	1-249-401-11	CARBON	47	5%	1/4W	
R126	1-249-401-11	CARBON	47	5%	1/4W	
R127	1-215-397-00	METAL	100	1%	1/6W	
R128	1-215-405-00	METAL	220	1%	1/6W	
R129	1-215-423-00	METAL	1.2K	1%	1/6W	
R130	1-215-435-00	METAL	3.9K	1%	1/6W	
R131	1-215-469-00	METAL	100K	1%	1/6W	
R132	1-215-441-00	METAL	6.8K	1%	1/6W	
R133	1-215-443-00	METAL	8.2K	1%	1/6W	
R134	1-249-427-11	CARBON	6.8K	5%	1/4W	
R135	1-249-405-11	CARBON	100	5%	1/4W	
R136	1-215-445-00	METAL	10K	1%	1/6W	
R137	1-215-415-00	METAL	560	1%	1/6W	
R138	1-215-443-00	METAL	8.2K	1%	1/6W	
R139	1-215-419-00	METAL	820	1%	1/6W	
R140	1-215-443-00	METAL	8.2K	1%	1/6W	
R141	1-215-433-00	METAL	3.3K	1%	1/6W	
R142	1-249-415-11	CARBON	680	5%	1/4W	
R143	1-215-427-00	METAL	1.8K	1%	1/6W	
R144	1-249-401-11	CARBON	47	5%	1/4W	
R145	1-249-421-11	CARBON	2.2K	5%	1/4W	
R146	1-249-431-11	CARBON	15K	5%	1/4W	
R147	1-215-435-00	METAL	3.9K	1%	1/6W	
R148	1-249-425-11	CARBON	4.7K	5%	1/4W	
R149	1-249-437-11	CARBON	47K	5%	1/4W	
R150	1-247-881-00	CARBON	120K	5%	1/4W	
R151	1-247-895-00	CARBON	470K	5%	1/4W	
R152	1-249-416-11	CARBON	820	5%	1/4W	
R153	1-215-411-00	METAL	390	1%	1/6W	
R154	1-249-418-11	CARBON	1.2K	5%	1/4W	
R155	1-215-441-00	METAL	6.8K	1%	1/6W	
R156	1-215-413-00	METAL	470	1%	1/6W	
R157	1-249-425-11	CARBON	4.7K	5%	1/4W	
R158	1-247-887-00	CARBON	220K	5%	1/4W	
R159	1-249-423-11	CARBON	3.3K	5%	1/4W	
R160	1-249-421-11	CARBON	2.2K	5%	1/4W	
R161	1-249-419-11	CARBON	1.5K	5%	1/4W	
R162	1-249-421-11	CARBON	2.2K	5%	1/4W	
R163	1-249-421-11	CARBON	2.2K	5%	1/4W	
R164	1-249-405-11	CARBON	100	5%	1/4W	
R165	1-249-405-11	CARBON	100	5%	1/4W	
R166	1-249-429-11	CARBON	10K	5%	1/4W	
R167	1-249-405-11	CARBON	100	5%	1/4W	
R168	1-249-425-11	CARBON	4.7K	5%	1/4W	
R169	1-249-405-11	CARBON	100	5%	1/4W	
R170	1-249-405-11	CARBON	100	5%	1/4W	
R171	1-249-414-11	CARBON	560	5%	1/4W	
R172	1-249-414-11	CARBON	560	5%	1/4W	
R173	1-249-430-11	CARBON	12K	5%	1/4W	
R174	1-249-405-11	CARBON	100	5%	1/4W	
R175	1-249-429-11	CARBON	10K	5%	1/4W	
R176	1-249-429-11	CARBON	10K	5%	1/4W	
R177	1-247-889-00	CARBON	270K	5%	1/4W	
R178	1-249-423-11	CARBON	3.3K	5%	1/4W	
R179	1-215-421-00	METAL	1K	1%	1/6W	
R180	1-215-441-00	METAL	6.8K	1%	1/6W	
R181	1-215-469-00	METAL	100K	1%	1/6W	
R182	1-215-460-00	METAL	43K	1%	1/6W	
R183	1-215-465-00	METAL	68K	1%	1/6W	
R184	1-215-441-00	METAL	6.8K	1%	1/6W	
R185	1-249-416-11	CARBON	820	5%	1/4W	
R187	1-249-417-11	CARBON	1K	5%	1/4W	
R188	1-249-393-11	CARBON	10	5%	1/4W	
R189	1-249-405-11	CARBON	100	5%	1/4W	
R201	1-249-417-11	CARBON	1K	5%	1/4W	
R202	1-249-421-11	CARBON	2.2K	5%	1/4W	
R203	1-249-417-11	CARBON	1K	5%	1/4W	
R204	1-249-393-11	CARBON	10	5%	1/4W	
R205	1-249-417-11	CARBON	1K	5%	1/4W	
R206	1-249-405-11	CARBON	100	5%	1/4W	
R207	1-215-421-00	METAL	1K	1%	1/6W	
R208	1-215-421-00	METAL	1K	1%	1/6W	
R209	1-215-421-00	METAL	1K	1%	1/6W	
R210	1-215-437-00	METAL	4.7K	1%	1/6W	
R211	1-215-459-00	METAL	39K	1%	1/6W	
R212	1-249-429-11	CARBON	10K	5%	1/4W	
R213	1-249-425-11	CARBON	4.7K	5%	1/4W	
R214	1-249-429-11	CARBON	10K	5%	1/4W	
R221	1-249-414-11	CARBON	560	5%	1/4W	
R222	1-249-414-11	CARBON	560	5%	1/4W	
R301	1-249-421-11	CARBON	2.2K	5%	1/4W	
R302	1-249-421-11	CARBON	2.2K	5%	1/4W	
R303	1-249-405-11	CARBON	100	5%	1/4W	
R304	1-249-405-11	CARBON	100	5%	1/4W	
R305	1-249-429-11	CARBON	10K	5%	1/4W	
R306	1-249-405-11	CARBON	100	5%	1/4W	
R307	1-249-425-11	CARBON	4.7K	5%	1/4W	
R308	1-249-405-11	CARBON	100	5%	1/4W	
R309	1-249-405-11	CARBON	100	5%	1/4W	
R310	1-249-430-11	CARBON	12K	5%	1/4W	
R311	1-249-417-11	CARBON	1K	5%	1/4W	
R312	1-249-417-11	CARBON	1K	5%	1/4W	
R313	1-249-405-11	CARBON	100	5%	1/4W	
R314	1-249-429-11	CARBON	10K	5%	1/4W	
R315	1-249-429-11	CARBON	10K	5%	1/4W	
R316	1-247-889-00	CARBON	270K	5%	1/4W	
R317	1-249-423-11	CARBON	3.3K	5%	1/4W	
R318	1-249-405-11	CARBON	100	5%	1/4W	
R319	1-249-437-11	CARBON	47K	5%	1/4W	
R320	1-249-429-11	CARBON	10K	5%	1/4W	
R321	1-215-433-00	METAL	3.3K	1%	1/6W	
R322	1-215-433-00	METAL	3.3K	1%	1/6W	
R323	1-249-423-11	CARBON	3.3K	5%	1/4W	
R324	1-215-460-00	METAL	43K	1%	1/6W	
R325	1-215-449-00	METAL	15K	1%	1/6W	
R326	1-249-417-11	CARBON	1K	5%	1/4W	

VARIABLE RESISTOR

RV101	1-237-520-21	RES, ADJ, CERMET 50K
RV102	1-237-520-21	RES, ADJ, CERMET 50K
RV201	1-237-520-21	RES, ADJ, CERMET 50K
RV202	1-237-518-21	RES, ADJ, CERMET 10K
RV203	1-237-518-21	RES, ADJ, CERMET 10K
RV204	1-237-517-21	RES, ADJ, CERMET 5K
RV301	1-237-519-21	RES, ADJ, CERMET 20K

BG

Ref.No.	Part No.	Description			Remark
	*A-1296-453-A	BG BOARD, COMPLETE			
		**********			
	*4-353-708-00	HOOK, FINGER			
		CONNECTOR			
BG1	*1-562-729-11	CONNECTOR, MULTI 64P			
	4-378-915-01	NUT (M2.6), PLATE; BG1			
		CAPACITOR			
C1	1-124-477-11	ELECT	47MF	20%	25V
C2	1-101-004-00	CERAMIC	0.01MF		50V
C3	1-124-477-11	ELECT	47MF	20%	25V
C4	1-101-004-00	CERAMIC	0.01MF		50V
C5	1-124-120-11	ELECT	220MF	20%	25V
C6	1-124-477-11	ELECT	47MF	20%	25V
C7	1-101-004-00	CERAMIC	0.01MF		50V
C8	1-124-120-11	ELECT	220MF	20%	25V
C9	1-124-477-11	ELECT	47MF	20%	25V
C10	1-101-004-00	CERAMIC	0.01MF		50V
C11	1-124-477-11	ELECT	47MF	20%	25V
C12	1-101-004-00	CERAMIC	0.01MF		50V
C13	1-124-120-11	ELECT	220MF	20%	25V
C100	1-136-165-00	FILM	0.1MF	5%	50V
C101	1-124-478-11	ELECT	100MF	20%	25V
C102	1-101-004-00	CERAMIC	0.01MF		50V
C103	1-101-004-00	CERAMIC	0.01MF		50V
C104	1-101-004-00	CERAMIC	0.01MF		50V
C105	1-101-004-00	CERAMIC	0.01MF		50V
C106	1-101-004-00	CERAMIC	0.01MF		50V
C107	1-101-004-00	CERAMIC	0.01MF		50V
C108	1-101-004-00	CERAMIC	0.01MF		50V
C109	1-124-478-11	ELECT	100MF	20%	25V
C110	1-101-004-00	CERAMIC	0.01MF		50V
C111	1-101-004-00	CERAMIC	0.01MF		50V
C112	1-101-004-00	CERAMIC	0.01MF		50V
C113	1-101-004-00	CERAMIC	0.01MF		50V
C114	1-123-875-11	ELECT	10MF	20%	50V
C115	1-123-875-11	ELECT	10MF	20%	50V
C116	1-101-004-00	CERAMIC	0.01MF		50V
C119	1-124-477-11	ELECT	47MF	20%	25V
C120	1-101-004-00	CERAMIC	0.01MF		50V
C121	1-124-477-11	ELECT	47MF	20%	25V
C122	1-101-004-00	CERAMIC	0.01MF		50V
C123	1-101-004-00	CERAMIC	0.01MF		50V
C124	1-136-161-00	FILM	0.047MF	5%	50V
C125	1-123-875-11	ELECT	10MF	20%	50V
C126	1-136-161-00	FILM	0.047MF	5%	50V
C127	1-101-004-00	CERAMIC	0.01MF		50V
C128	1-101-004-00	CERAMIC	0.01MF		50V
C129	1-101-004-00	CERAMIC	0.01MF		50V
C130	1-101-004-00	CERAMIC	0.01MF		50V
C131	1-101-004-00	CERAMIC	0.01MF		50V
C132	1-101-004-00	CERAMIC	0.01MF		50V
C133	1-102-824-00	CERAMIC	470PF	5%	50V
C200	1-124-477-11	ELECT	47MF	20%	25V
C201	1-101-004-00	CERAMIC	0.01MF		50V
C202	1-102-959-00	CERAMIC	22PF	5%	50V
C203	1-102-498-91	CERAMIC	100PF	5%	50V
C204	1-102-973-00	CERAMIC	100PF	5%	50V
C205	1-102-074-00	CERAMIC	0.001MF	10%	50V
C206	1-101-004-00	CERAMIC	0.01MF		50V
C207	1-101-004-00	CERAMIC	0.01MF		50V
C208	1-101-004-00	CERAMIC	0.01MF		50V
C209	1-102-959-00	CERAMIC	22PF	5%	50V
C210	1-102-498-91	CERAMIC	100PF	5%	50V
C211	1-101-004-00	CERAMIC	0.01MF		50V
C212	1-102-959-00	CERAMIC	22PF	5%	50V
C213	1-102-959-00	CERAMIC	22PF	5%	50V
C214	1-101-004-00	CERAMIC	0.01MF		50V
C215	1-102-973-00	CERAMIC	100PF	5%	50V
C216	1-102-074-00	CERAMIC	0.001MF	10%	50V
C217	1-101-004-00	CERAMIC	0.01MF		50V
C218	1-101-004-00	CERAMIC	0.01MF		50V
C219	1-124-443-00	ELECT	100MF	20%	10V
C220	1-101-004-00	CERAMIC	0.01MF		50V
C221	1-124-478-11	ELECT	100MF	20%	25V
C222	1-101-004-00	CERAMIC	0.01MF		50V
C223	1-124-477-11	ELECT	47MF	20%	25V
C301	1-101-004-00	CERAMIC	0.01MF		50V
C302	1-102-824-00	CERAMIC	470PF	5%	50V
C303	1-102-959-00	CERAMIC	22PF	5%	50V
C305	1-101-004-00	CERAMIC	0.01MF		50V
C306	1-101-004-00	CERAMIC	0.01MF		50V
C307	1-101-004-00	CERAMIC	0.01MF		50V
C308	1-101-004-00	CERAMIC	0.01MF		50V
C309	1-102-973-00	CERAMIC	100PF	5%	50V
C310	1-102-074-00	CERAMIC	0.001MF	10%	50V
C311	1-101-004-00	CERAMIC	0.01MF		50V
C312	1-101-004-00	CERAMIC	0.01MF		50V
C313	1-102-973-00	CERAMIC	100PF	5%	50V
C314	1-102-074-00	CERAMIC	0.001MF	10%	50V
C315	1-101-004-00	CERAMIC	0.01MF		50V
C316	1-101-004-00	CERAMIC	0.01MF		50V
C317	1-101-004-00	CERAMIC	0.01MF		50V
C318	1-102-500-91	CERAMIC	150PF	5%	50V
C319	1-102-500-91	CERAMIC	150PF	5%	50V
C320	1-102-973-00	CERAMIC	100PF	5%	50V
C321	1-102-074-00	CERAMIC	0.001MF	10%	50V
C322	1-123-875-11	ELECT	10MF	20%	50V
C323	1-101-004-00	CERAMIC	0.01MF		50V
C324	1-101-004-00	CERAMIC	0.01MF		50V
C325	1-102-973-00	CERAMIC	100PF	5%	50V
C326	1-102-074-00	CERAMIC	0.001MF	10%	50V
C327	1-101-004-00	CERAMIC	0.01MF		50V
C328	1-101-004-00	CERAMIC	0.01MF		50V
C329	1-124-443-00	ELECT	100MF	20%	10V
C330	1-101-004-00	CERAMIC	0.01MF		50V
C331	1-124-478-11	ELECT	100MF	20%	25V
C332	1-101-004-00	CERAMIC	0.01MF		50V
C333	1-124-443-00	ELECT	100MF	20%	10V
C334	1-101-004-00	CERAMIC	0.01MF		50V
C335	1-124-477-11	ELECT	47MF	20%	25V
C336	1-101-004-00	CERAMIC	0.01MF		50V
C337	1-124-499-11	ELECT	1MF	20%	50V
C338	1-123-875-11	ELECT	10MF	20%	50V
		DIODE			
D1	8-719-911-19	DIODE 1SS119			
D101	8-719-911-19	DIODE 1SS119			
D201	8-719-110-08	DIODE RD8.2ES-B2			
D202	8-719-911-19	DIODE 1SS119			
D203	8-719-110-08	DIODE RD8.2ES-B2			
D204	8-719-911-19	DIODE 1SS119			
D301	8-719-110-08	DIODE RD8.2ES-B2			
D302	8-719-911-19	DIODE 1SS119			
D303	8-719-110-08	DIODE RD8.2ES-B2			

Ref.No.	Part No.	Description	Remark
D304	8-719-911-19	DIODE 1SS119	
D305	8-719-110-08	DIODE RD8.2ES-B2	
D306	8-719-911-19	DIODE 1SS119	
D307	8-719-110-08	DIODE RD8.2ES-B2	
D308	8-719-911-19	DIODE 1SS119	
D309	8-719-911-19	DIODE 1SS119	
		IC	
IC1	8-759-171-05	IC UPC7805H	
IC101	8-759-014-95	IC MC1495L	
IC102	8-759-007-40	IC TL082CP	
IC103	8-759-007-40	IC TL082CP	
IC104	8-759-240-53	IC TC4053BP	
IC105	8-759-007-21	IC MC74HC4053N	
IC201	8-759-203-83	IC TC74HC4538P	
IC202	8-759-203-83	IC TC74HC4538P	
IC203	8-759-203-83	IC TC74HC4538P	
IC204	8-759-202-85	IC TC74HC112P	
IC301	8-759-203-83	IC TC74HC4538P	
IC302	8-759-203-40	IC TC74HC393P	
IC303	8-759-202-11	IC TC74HC00P	
IC304	8-759-203-05	IC TC74HC193P	
IC305	8-759-203-05	IC TC74HC193P	
IC306	8-759-203-83	IC TC74HC4538P	
IC307	8-759-202-11	IC TC74HC00P	
IC308	8-759-202-85	IC TC74HC112P	
		COIL	
L1	1-408-429-00	INDUCTOR 470UH	
L2	1-408-429-00	INDUCTOR 470UH	
L3	1-408-429-00	INDUCTOR 470UH	
		TRANSISTOR	
Q101	8-729-201-05	TRANSISTOR 2SC2878-B	
Q102	8-729-201-05	TRANSISTOR 2SC2878-B	
Q103	8-729-119-76	TRANSISTOR 2SA1175-HFE	
Q104	8-729-201-05	TRANSISTOR 2SC2878-B	
Q105	8-729-119-78	TRANSISTOR 2SC2785-HFE	
Q106	8-729-119-76	TRANSISTOR 2SA1175-HFE	
Q107	8-729-119-76	TRANSISTOR 2SA1175-HFE	
Q110	8-729-119-78	TRANSISTOR 2SC2785-HFE	
Q111	8-729-119-78	TRANSISTOR 2SC2785-HFE	
Q112	8-729-119-78	TRANSISTOR 2SC2785-HFE	
Q113	8-729-119-78	TRANSISTOR 2SC2785-HFE	
Q114	8-729-119-76	TRANSISTOR 2SA1175-HFE	
Q115	8-729-119-76	TRANSISTOR 2SA1175-HFE	
Q116	8-729-119-76	TRANSISTOR 2SA1175-HFE	
Q117	8-729-802-45	TRANSISTOR 2SK125-5	
Q118	8-729-119-76	TRANSISTOR 2SA1175-HFE	
Q200	8-729-119-78	TRANSISTOR 2SC2785-HFE	
Q201	8-729-119-76	TRANSISTOR 2SA1175-HFE	
Q202	8-729-119-78	TRANSISTOR 2SC2785-HFE	
Q203	8-729-119-78	TRANSISTOR 2SC2785-HFE	
Q204	8-729-119-76	TRANSISTOR 2SA1175-HFE	
Q205	8-729-119-76	TRANSISTOR 2SA1175-HFE	
Q206	8-729-119-78	TRANSISTOR 2SC2785-HFE	
Q207	8-729-119-78	TRANSISTOR 2SC2785-HFE	
Q208	8-729-119-76	TRANSISTOR 2SA1175-HFE	
Q300	8-729-119-78	TRANSISTOR 2SC2785-HFE	
Q301	8-729-119-76	TRANSISTOR 2SA1175-HFE	
Q302	8-729-119-78	TRANSISTOR 2SC2785-HFE	
Q303	8-729-119-78	TRANSISTOR 2SC2785-HFE	
Q304	8-729-119-76	TRANSISTOR 2SA1175-HFE	
Q305	8-729-119-76	TRANSISTOR 2SA1175-HFE	
Q306	8-729-119-78	TRANSISTOR 2SC2785-HFE	
Q307	8-729-119-78	TRANSISTOR 2SC2785-HFE	
Q308	8-729-119-76	TRANSISTOR 2SA1175-HFE	
Q309	8-729-119-76	TRANSISTOR 2SA1175-HFE	
Q310	8-729-119-78	TRANSISTOR 2SC2785-HFE	
Q311	8-729-119-78	TRANSISTOR 2SC2785-HFE	
Q312	8-729-119-76	TRANSISTOR 2SA1175-HFE	
Q313	8-729-119-76	TRANSISTOR 2SA1175-HFE	
Q314	8-729-119-78	TRANSISTOR 2SC2785-HFE	
Q315	8-729-119-78	TRANSISTOR 2SC2785-HFE	
Q316	8-729-119-76	TRANSISTOR 2SA1175-HFE	
Q317	8-729-900-36	TRANSISTOR DTC124ES	
Q318	8-729-900-36	TRANSISTOR DTC124ES	
Q319	8-729-119-78	TRANSISTOR 2SC2785-HFE	
Q320	8-729-119-76	TRANSISTOR 2SA1175-HFE	
		RESISTOR	
R100	1-249-405-11	CARBON 100 5% 1/4W	
R102	1-249-405-11	CARBON 100 5% 1/4W	
R103	1-215-449-00	METAL 15K 1% 1/6W	
R104	1-215-429-00	METAL 2.2K 1% 1/6W	
R105	1-215-449-00	METAL 15K 1% 1/6W	
R106	1-215-429-00	METAL 2.2K 1% 1/6W	
R107	1-215-449-00	METAL 15K 1% 1/6W	
R108	1-215-444-00	METAL 9.1K 1% 1/6W	
R109	1-215-444-00	METAL 9.1K 1% 1/6W	
R110	1-215-413-00	METAL 470 1% 1/6W	
R111	1-249-435-11	CARBON 33K 5% 1/4W	
R112	1-215-433-00	METAL 3.3K 1% 1/6W	
R113	1-215-433-00	METAL 3.3K 1% 1/6W	
R114	1-215-445-00	METAL 10K 1% 1/6W	
R115	1-215-416-00	METAL 620 1% 1/6W	
R116	1-215-445-00	METAL 10K 1% 1/6W	
R117	1-215-447-00	METAL 12K 1% 1/6W	
R118	1-215-417-00	METAL 680 1% 1/6W	
R119	1-215-445-00	METAL 10K 1% 1/6W	
R120	1-215-435-00	METAL 3.9K 1% 1/6W	
R121	1-249-435-11	CARBON 33K 5% 1/4W	
R122	1-249-435-11	CARBON 33K 5% 1/4W	
R123	1-249-435-11	CARBON 33K 5% 1/4W	
R124	1-249-429-11	CARBON 10K 5% 1/4W	
R125	1-249-435-11	CARBON 33K 5% 1/4W	
R126	1-215-443-00	METAL 8.2K 1% 1/6W	
R127	1-215-445-00	METAL 10K 1% 1/6W	
R128	1-215-419-00	METAL 820 1% 1/6W	
R129	1-215-435-00	METAL 3.9K 1% 1/6W	
R130	1-215-437-00	METAL 4.7K 1% 1/6W	
R131	1-215-437-00	METAL 4.7K 1% 1/6W	
R132	1-249-422-11	CARBON 2.7K 5% 1/4W	
R133	1-215-401-11	METAL 150 1% 1/6W	
R134	1-215-401-11	METAL 150 1% 1/6W	
R135	1-215-445-00	METAL 10K 1% 1/6W	
R136	1-215-445-00	METAL 10K 1% 1/6W	
R137	1-215-425-00	METAL 1.5K 1% 1/6W	
R138	1-215-446-00	METAL 11K 1% 1/6W	
R139	1-215-425-00	METAL 1.5K 1% 1/6W	
R140	1-215-447-00	METAL 12K 1% 1/6W	
R144	1-215-417-00	METAL 680 1% 1/6W	
R145	1-215-427-00	METAL 1.8K 1% 1/6W	
R146	1-215-439-00	METAL 5.6K 1% 1/6W	
R147	1-215-439-00	METAL 5.6K 1% 1/6W	
R148	1-249-403-11	CARBON 68 5% 1/4W	

BG GA

Ref.No.	Part No.	Description				Remark
R150	1-215-427-00	METAL	1.8K	1%	1/6W	
R151	1-215-439-00	METAL	5.6K	1%	1/6W	
R152	1-215-439-00	METAL	5.6K	1%	1/6W	
R153	1-249-403-11	CARBON	68	5%	1/4W	
R154	1-215-419-00	METAL	820	1%	1/6W	
R155	1-215-416-00	METAL	620	1%	1/6W	
R156	1-249-417-11	CARBON	1K	5%	1/4W	
R157	1-249-399-11	CARBON	33	5%	1/4W	
R158	1-249-419-11	CARBON	1.5K	5%	1/4W	
R159	1-249-393-11	CARBON	10	5%	1/4W	
R160	1-249-405-11	CARBON	100	5%	1/4W	
R161	1-215-445-00	METAL	10K	1%	1/6W	
R162	1-215-416-00	METAL	620	1%	1/6W	
R163	1-249-429-11	CARBON	10K	5%	1/4W	
R164	1-249-417-11	CARBON	1K	5%	1/4W	
R165	1-249-405-11	CARBON	100	5%	1/4W	
R166	1-249-441-11	CARBON	100K	5%	1/4W	
R167	1-247-903-00	CARBON	1M	5%	1/4W	
R168	1-215-420-00	METAL	910	1%	1/6W	
R169	1-215-445-00	METAL	10K	1%	1/6W	
R170	1-215-436-00	METAL	4.3K	1%	1/6W	
R173	1-249-429-11	CARBON	10K	5%	1/4W	
R174	1-249-405-11	CARBON	100	5%	1/4W	
R175	1-249-405-11	CARBON	100	5%	1/4W	
R176	1-215-487-00	METAL	560K	1%	1/6W	
R201	1-249-427-11	CARBON	6.8K	5%	1/4W	
R202	1-249-423-11	CARBON	3.3K	5%	1/4W	
R203	1-249-430-11	CARBON	12K	5%	1/4W	
R204	1-215-426-00	METAL	1.6K	1%	1/6W	
R205	1-215-433-00	METAL	3.3K	1%	1/6W	
R206	1-249-421-11	CARBON	2.2K	5%	1/4W	
R207	1-249-425-11	CARBON	4.7K	5%	1/4W	
R208	1-249-425-11	CARBON	4.7K	5%	1/4W	
R209	1-249-417-11	CARBON	1K	5%	1/4W	
R210	1-249-429-11	CARBON	10K	5%	1/4W	
R211	1-249-405-11	CARBON	100	5%	1/4W	
R212	1-215-421-00	METAL	1K	1%	1/6W	
R213	1-215-433-00	METAL	3.3K	1%	1/6W	
R214	1-215-421-00	METAL	1K	1%	1/6W	
R215	1-215-421-00	METAL	1K	1%	1/6W	
R216	1-249-421-11	CARBON	2.2K	5%	1/4W	
R217	1-249-425-11	CARBON	4.7K	5%	1/4W	
R218	1-249-425-11	CARBON	4.7K	5%	1/4W	
R219	1-249-417-11	CARBON	1K	5%	1/4W	
R220	1-249-429-11	CARBON	10K	5%	1/4W	
R221	1-249-405-11	CARBON	100	5%	1/4W	
R222	1-249-426-11	CARBON	5.6K	5%	1/4W	
R223	1-249-425-11	CARBON	4.7K	5%	1/4W	
R301	1-249-427-11	CARBON	6.8K	5%	1/4W	
R302	1-249-423-11	CARBON	3.3K	5%	1/4W	
R303	1-249-430-11	CARBON	12K	5%	1/4W	
R304	1-215-468-00	METAL	91K	1%	1/6W	
R305	1-215-421-00	METAL	1K	1%	1/6W	
R309	1-249-421-11	CARBON	2.2K	5%	1/4W	
R310	1-249-425-11	CARBON	4.7K	5%	1/4W	
R311	1-249-425-11	CARBON	4.7K	5%	1/4W	
R312	1-249-417-11	CARBON	1K	5%	1/4W	
R313	1-249-429-11	CARBON	10K	5%	1/4W	
R314	1-249-405-11	CARBON	100	5%	1/4W	
R315	1-249-421-11	CARBON	2.2K	5%	1/4W	
R316	1-249-425-11	CARBON	4.7K	5%	1/4W	
R317	1-249-425-11	CARBON	4.7K	5%	1/4W	
R318	1-249-417-11	CARBON	1K	5%	1/4W	
R319	1-249-429-11	CARBON	10K	5%	1/4W	
R320	1-249-405-11	CARBON	100	5%	1/4W	
R321	1-215-461-00	METAL	47K	1%	1/6W	
R322	1-215-467-00	METAL	82K	1%	1/6W	
R323	1-249-421-11	CARBON	2.2K	5%	1/4W	
R324	1-249-425-11	CARBON	4.7K	5%	1/4W	
R325	1-249-425-11	CARBON	4.7K	5%	1/4W	
R326	1-249-417-11	CARBON	1K	5%	1/4W	
R327	1-249-429-11	CARBON	10K	5%	1/4W	
R328	1-249-405-11	CARBON	100	5%	1/4W	
R329	1-249-421-11	CARBON	2.2K	5%	1/4W	
R330	1-249-425-11	CARBON	4.7K	5%	1/4W	
R331	1-249-425-11	CARBON	4.7K	5%	1/4W	
R332	1-249-417-11	CARBON	1K	5%	1/4W	
R333	1-249-429-11	CARBON	10K	5%	1/4W	
R334	1-249-405-11	CARBON	100	5%	1/4W	
R335	1-249-426-11	CARBON	5.6K	5%	1/4W	
R336	1-249-421-11	CARBON	2.2K	5%	1/4W	
R337	1-249-405-11	CARBON	100	5%	1/4W	
R338	1-249-405-11	CARBON	100	5%	1/4W	
R339	1-249-405-11	CARBON	100	5%	1/4W	
R340	1-249-441-11	CARBON	100K	5%	1/4W	

VARIABLE RESISTOR

RV101	1-224-938-00	RES, ADJ, CERMET 2K			
RV102	1-224-941-00	RES, ADJ, CERMET 20K			
RV103	1-224-941-00	RES, ADJ, CERMET 20K			
RV201	1-224-939-00	RES, ADJ, CERMET 5K			
RV202	1-224-939-00	RES, ADJ, CERMET 5K			

****

*1-626-504-11 GA BOARD
****

2-832-007-00 BUSHING (K), INSULATING
3-701-809-41 SCREW, TERMINAL (M3X10)
*4-026-251-00 SPACER, INSULATING
*4-363-404-00 HOLDER, IC
4-363-414-00 SPACER, MICA

CAPACITOR

C1	1-123-933-91	ELECT	10MF	20%	160V
C2	1-124-037-91	ELECT	220MF	20%	25V
C3	1-124-037-91	ELECT	220MF	20%	25V
C4	1-124-037-91	ELECT	220MF	20%	25V
C5	1-124-037-91	ELECT	220MF	20%	25V
C6	1-123-933-91	ELECT	10MF	20%	160V
C7	1-124-037-91	ELECT	220MF	20%	25V
C8	1-124-037-91	ELECT	220MF	20%	25V
C9	1-124-037-91	ELECT	220MF	20%	25V
C10	1-124-037-91	ELECT	220MF	20%	25V
C11	1-124-127-91	ELECT	100MF	20%	25V
C12	1-123-874-91	ELECT	470MF	20%	16V
C13	1-124-037-91	ELECT	220MF	20%	25V
C14	1-124-037-91	ELECT	220MF	20%	25V
C16	1-130-483-00	MYLAR	0.01MF	5%	50V
C17	1-123-933-91	ELECT	10MF	20%	160V

DIODE

D1	8-719-971-20	DIODE ERC38-06
D2	8-719-971-20	DIODE ERC38-06
D3	8-719-911-19	DIODE 1SS119

Ref.No.	Part No.	Description	Remark
		CONNECTOR	
GA1	*1-560-127-00	PLUG, CONNECTOR (2.5MM) 7P	
GA3	*1-566-054-11	PIN, CONNECTOR 2P	
GA4	*1-566-055-11	PIN, CONNECTOR 3P	
GA5	*1-566-057-11	PIN, CONNECTOR 5P	
GA6	*1-566-059-11	PIN, CONNECTOR 7P	
GA7	*1-566-055-11	PIN, CONNECTOR 3P	
GA8	*1-566-056-11	PIN, CONNECTOR 4P	
GA9	*1-566-054-11	PIN, CONNECTOR 2P	
GA10	*1-566-054-11	PIN, CONNECTOR 2P	
GA11	*1-566-054-11	PIN, CONNECTOR 2P	
GA12	*1-566-058-11	PIN, CONNECTOR 6P	
GA13	*1-508-768-00	PIN, CONNECTOR (5MM PITCH) 6P	
GA14	*1-566-054-11	PIN, CONNECTOR 2P	
GA15	*1-566-058-11	PIN, CONNECTOR 6P	
GA16	*1-566-058-11	PIN, CONNECTOR 6P	
GA17	*1-566-055-11	PIN, CONNECTOR 3P	
GA18	*1-566-057-11	PIN, CONNECTOR 5P	
GA19	*1-566-060-11	PIN, CONNECTOR 8P	
		IC	
IC1	8-759-700-06	IC NJM7812B	
IC2	8-759-179-12	IC UPC7912H	
IC3	8-759-700-06	IC NJM7812B	
IC4	8-759-179-12	IC UPC7912H	
		TRANSISTOR	
Q1	8-729-900-36	TRANSISTOR DTC124ES	
Q2	8-729-900-63	TRANSISTOR DTA124ES	
Q3	8-729-304-26	TRANSISTOR 2SC3263-O	
Q4	8-729-103-08	TRANSISTOR 2SC3209	
		RESISTOR	
R1	1-249-425-11	CARBON 4.7K 5% 1/4W	
R2	1-249-405-11	CARBON 100 5% 1/4W	
R3	1-249-417-11	CARBON 1K 5% 1/4W	
R7	1-249-417-11	CARBON 1K 5% 1/4W	
R8	1-215-875-11	METAL OXIDE 10K 5% 1W	F
R9	1-215-879-91	METAL OXIDE 47K 5% 1W	F
R10	1-217-333-11	WIREWOUND 10 10% 7W	F
**********			
	*1-617-465-11	CB BOARD	
		********	
	1-526-767-00	SOCKET, PICTURE TUBE	
	1-556-880-51	LEAD ASSY, HIGH-VOLTAGE	
		CAPACITOR	
C1	1-102-316-00	CERAMIC 15PF 5%	500V
C2	1-102-316-00	CERAMIC 15PF 5%	500V
C3	1-102-316-00	CERAMIC 15PF 5%	500V
C4	1-102-223-11	CERAMIC 0.0047MF 10%	2KV
		CONNECTOR	
CB1	*1-508-786-00	PIN, CONNECTOR (5MM PITCH) 2P	
CB2	*1-508-784-00	PIN, CONNECTOR (5MM PITCH) 1P	
CB4	*1-566-056-11	PIN, CONNECTOR 4P	
CB5	*1-566-056-11	PIN, CONNECTOR 4P	
CB6	*1-566-056-11	PIN, CONNECTOR 4P	
CB7	*1-566-055-11	PIN, CONNECTOR 3P	
CB8	*1-566-054-11	PIN, CONNECTOR 2P	
		COIL	
L1	1-407-684-11	INDUCTOR 1.8UH	
L2	1-407-684-11	INDUCTOR 1.8UH	
L3	1-407-684-11	INDUCTOR 1.8UH	
		NEON LAMP	
NL1	1-519-013-13	DISCHARGE TUBE	
NL2	1-519-013-13	DISCHARGE TUBE	
NL3	1-519-013-13	DISCHARGE TUBE	
NL4	1-519-013-13	DISCHARGE TUBE	
NL5	1-519-013-13	DISCHARGE TUBE	
NL6	1-519-013-13	DISCHARGE TUBE	
		RESISTOR	
R1	1-202-371-37	SOLID 330 10%	1/4W
R2	1-202-371-37	SOLID 330 10%	1/4W
R3	1-202-371-37	SOLID 330 10%	1/4W
R4	1-202-387-17	SOLID 1.5K 5%	1/4W
R5	1-202-387-17	SOLID 1.5K 5%	1/4W
R6	1-202-387-17	SOLID 1.5K 5%	1/4W
R7	1-202-453-37	SOLID 820K 10%	1/4W
R9	1-202-621-35	SOLID 100K 10%	1/2W
R10	1-202-525-00	SOLID 10 10%	1/2W
R12	1-202-337-37	SOLID 33 10%	1/4W
R13	1-202-337-37	SOLID 33 10%	1/4W
R14	1-202-337-37	SOLID 33 10%	1/4W
		SPARK GAP	
SG1	1-519-063-99	DISCHARGING GAP	
**********			
	*A-1335-009-A	CA BOARD, COMPLETE	
		**********	
	3-701-809-41	SCREW, TERMINAL (M3X10)	
	4-373-933-01	SHEET (TRANSISTOR), BN	
		CAPACITOR	
C1	1-102-951-00	CERAMIC 15PF 5%	50V
C2	1-101-004-00	CERAMIC 0.01MF	50V
C3	1-124-126-00	ELECT 47MF 20%	16V
C4	1-124-126-00	ELECT 47MF 20%	16V
C5	1-102-816-00	CERAMIC 120PF 5%	50V
C6	1-101-004-00	CERAMIC 0.01MF	50V
C7	1-101-004-00	CERAMIC 0.01MF	50V
C8	1-124-126-00	ELECT 47MF 20%	25V
C9	1-102-973-00	CERAMIC 100PF 5%	50V
C12	1-124-126-00	ELECT 47MF 20%	16V
C13	1-101-004-00	CERAMIC 0.01MF	50V
C16	1-102-973-00	CERAMIC 100PF 5%	50V
C17	1-136-153-00	FILM 0.01MF 5%	50V
C18	1-101-006-00	CERAMIC 0.047MF	50V
C19	1-136-157-00	FILM 0.022MF 5%	50V
C20	1-101-004-00	CERAMIC 0.01MF	50V
C21	1-101-006-00	CERAMIC 0.047MF	50V
C22	1-108-680-11	MYLAR 0.001MF 10%	200V
C23	1-124-798-11	ELECT 1MF 20%	160V

CA

Ref.No.	Part No.	Description			Remark
C24	1-124-634-11	ELECT	1MF	20%	450V
C101	1-123-874-91	ELECT	470MF	20%	16V
C102	1-123-874-91	ELECT	470MF	20%	16V
C103	1-101-004-00	CERAMIC	0.01MF		50V
C104	1-101-004-00	CERAMIC	0.01MF		50V
C105	1-126-101-11	ELECT	100MF	20%	16V
C106	1-126-101-11	ELECT	100MF	20%	16V
C107	1-126-101-11	ELECT	100MF	20%	16V
C108	1-126-101-11	ELECT	100MF	20%	16V
C109	1-101-004-00	CERAMIC	0.01MF		50V
C110	1-101-004-00	CERAMIC	0.01MF		50V
C111	1-101-004-00	CERAMIC	0.01MF		50V
C113	1-126-101-11	ELECT	100MF	20%	16V
C114	1-101-004-00	CERAMIC	0.01MF		50V
C116	1-101-004-00	CERAMIC	0.01MF		50V
C118	1-126-101-11	ELECT	100MF	20%	16V
C120	1-101-004-00	CERAMIC	0.01MF		50V
C121	1-101-004-00	CERAMIC	0.01MF		50V
C122	1-126-101-11	ELECT	100MF	20%	16V
C123	1-126-101-11	ELECT	100MF	20%	16V
C124	1-101-004-00	CERAMIC	0.01MF		50V
C125	1-101-004-00	CERAMIC	0.01MF		50V
C126	1-101-004-00	CERAMIC	0.01MF		50V
C127	1-101-004-00	CERAMIC	0.01MF		50V
C128	1-126-101-11	ELECT	100MF	20%	16V
C129	1-126-101-11	ELECT	100MF	20%	16V
C130	1-101-004-00	CERAMIC	0.01MF		50V
C131	1-101-004-00	CERAMIC	0.01MF		50V
C134	1-124-046-00	ELECT	10MF	20%	160V
C136	1-108-692-11	MYLAR	0.01MF	10%	200V
C137	1-124-046-00	ELECT	10MF	20%	160V
C138	1-124-046-00	ELECT	10MF	20%	160V
C139	1-108-692-11	MYLAR	0.01MF	10%	200V
C140	1-124-046-00	ELECT	10MF	20%	160V
C141	1-108-692-11	MYLAR	0.01MF	10%	200V
C201	1-102-951-00	CERAMIC	15PF	5%	50V
C202	1-101-004-00	CERAMIC	0.01MF		50V
C203	1-124-126-00	ELECT	47MF	20%	16V
C204	1-124-126-00	ELECT	47MF	20%	16V
C205	1-102-816-00	CERAMIC	120PF	5%	50V
C206	1-101-004-00	CERAMIC	0.01MF		50V
C207	1-101-004-00	CERAMIC	0.01MF		50V
C208	1-124-126-00	ELECT	47MF	20%	25V
C209	1-102-973-00	CERAMIC	100PF	5%	50V
C212	1-124-126-00	ELECT	47MF	20%	16V
C213	1-101-004-00	CERAMIC	0.01MF		50V
C216	1-102-973-00	CERAMIC	100PF	5%	50V
C217	1-136-153-00	FILM	0.01MF	5%	50V
C218	1-101-006-00	CERAMIC	0.047MF		50V
C219	1-136-157-00	FILM	0.022MF	5%	50V
C220	1-101-004-00	CERAMIC	0.01MF		50V
C221	1-101-006-00	CERAMIC	0.047MF		50V
C222	1-108-680-11	MYLAR	0.001MF	10%	200V
C223	1-124-798-11	ELECT	1MF	20%	160V
C224	1-124-634-11	ELECT	1MF	20%	450V
C301	1-123-874-91	ELECT	470MF	20%	16V
C302	1-123-874-91	ELECT	470MF	20%	16V
C303	1-101-004-00	CERAMIC	0.01MF		50V
C304	1-101-004-00	CERAMIC	0.01MF		50V
C305	1-126-101-11	ELECT	100MF	20%	16V
C306	1-126-101-11	ELECT	100MF	20%	16V
C307	1-126-101-11	ELECT	100MF	20%	16V
C308	1-126-101-11	ELECT	100MF	20%	16V
C309	1-101-004-00	CERAMIC	0.01MF		50V
C310	1-101-004-00	CERAMIC	0.01MF		50V
C311	1-101-004-00	CERAMIC	0.01MF		50V
C313	1-126-101-11	ELECT	100MF	20%	16V
C314	1-101-004-00	CERAMIC	0.01MF		50V
C316	1-101-004-00	CERAMIC	0.01MF		50V
C318	1-126-101-11	ELECT	100MF	20%	16V
C320	1-101-004-00	CERAMIC	0.01MF		50V
C321	1-101-004-00	CERAMIC	0.01MF		50V
C322	1-126-101-11	ELECT	100MF	20%	16V
C323	1-126-101-11	ELECT	100MF	20%	16V
C324	1-101-004-00	CERAMIC	0.01MF		50V
C325	1-101-004-00	CERAMIC	0.01MF		50V
C326	1-101-004-00	CERAMIC	0.01MF		50V
C327	1-101-004-00	CERAMIC	0.01MF		50V
C328	1-126-101-11	ELECT	100MF	20%	16V
C329	1-126-101-11	ELECT	100MF	20%	16V
C330	1-101-004-00	CERAMIC	0.01MF		50V
C331	1-101-004-00	CERAMIC	0.01MF		50V
C334	1-124-046-00	ELECT	10MF	20%	160V
C336	1-108-692-11	MYLAR	0.01MF	10%	200V
C337	1-124-046-00	ELECT	10MF	20%	160V
C338	1-124-046-00	ELECT	10MF	20%	160V
C339	1-108-692-11	MYLAR	0.01MF	10%	200V
C340	1-124-046-00	ELECT	10MF	20%	160V
C341	1-108-692-11	MYLAR	0.01MF	10%	200V
C401	1-102-951-00	CERAMIC	15PF	5%	50V
C402	1-101-004-00	CERAMIC	0.01MF		50V
C403	1-124-126-00	ELECT	47MF	20%	16V
C404	1-124-126-00	ELECT	47MF	20%	16V
C405	1-102-816-00	CERAMIC	120PF	5%	50V
C406	1-101-004-00	CERAMIC	0.01MF		50V
C407	1-101-004-00	CERAMIC	0.01MF		50V
C408	1-124-126-00	ELECT	47MF	20%	25V
C409	1-102-973-00	CERAMIC	100PF	5%	50V
C412	1-124-126-00	ELECT	47MF	20%	16V
C413	1-101-004-00	CERAMIC	0.01MF		50V
C416	1-102-973-00	CERAMIC	100PF	5%	50V
C417	1-136-153-00	FILM	0.01MF	5%	50V
C418	1-101-006-00	CERAMIC	0.047MF		50V
C419	1-136-157-00	FILM	0.022MF	5%	50V
C420	1-101-004-00	CERAMIC	0.01MF		50V
C421	1-101-006-00	CERAMIC	0.047MF		50V
C422	1-108-680-11	MYLAR	0.001MF	10%	200V
C423	1-124-798-11	ELECT	1MF	20%	160V
C424	1-124-634-11	ELECT	1MF	20%	450V
C501	1-123-874-91	ELECT	470MF	20%	16V
C502	1-123-874-91	ELECT	470MF	20%	16V
C503	1-101-004-00	CERAMIC	0.01MF		50V
C504	1-101-004-00	CERAMIC	0.01MF		50V
C505	1-126-101-11	ELECT	100MF	20%	16V
C506	1-126-101-11	ELECT	100MF	20%	16V
C507	1-126-101-11	ELECT	100MF	20%	16V
C508	1-126-101-11	ELECT	100MF	20%	16V
C509	1-101-004-00	CERAMIC	0.01MF		50V
C510	1-101-004-00	CERAMIC	0.01MF		50V
C511	1-101-004-00	CERAMIC	0.01MF		50V
C513	1-126-101-11	ELECT	100MF	20%	16V
C514	1-101-004-00	CERAMIC	0.01MF		50V
C516	1-101-004-00	CERAMIC	0.01MF		50V
C518	1-126-101-11	ELECT	100MF	20%	16V
C520	1-101-004-00	CERAMIC	0.01MF		50V
C521	1-101-004-00	CERAMIC	0.01MF		50V
C522	1-126-101-11	ELECT	100MF	20%	16V
C523	1-126-101-11	ELECT	100MF	20%	16V
C524	1-101-004-00	CERAMIC	0.01MF		50V
C525	1-101-004-00	CERAMIC	0.01MF		50V

Ref.No.	Part No.	Description			Remark
C526	1-101-004-00	CERAMIC	0.01MF		50V
C527	1-101-004-00	CERAMIC	0.01MF		50V
C528	1-126-101-11	ELECT	100MF	20%	16V
C529	1-126-101-11	ELECT	100MF	20%	16V
C530	1-101-004-00	CERAMIC	0.01MF		50V
C531	1-101-004-00	CERAMIC	0.01MF		50V
C534	1-124-046-00	ELECT	10MF	20%	160V
C536	1-108-692-11	MYLAR	0.01MF	10%	200V
C537	1-124-046-00	ELECT	10MF	20%	160V
C538	1-124-046-00	ELECT	10MF	20%	160V
C539	1-108-692-11	MYLAR	0.01MF	10%	200V
C540	1-124-046-00	ELECT	10MF	20%	160V
C541	1-108-692-11	MYLAR	0.01MF	10%	200V
C601	1-102-944-00	CERAMIC	7PF	0.5PF	50V
C602	1-126-101-11	ELECT	100MF	20%	16V
C603	1-123-356-00	ELECT	10MF	20%	16V
C604	1-123-356-00	ELECT	10MF	20%	16V
C605	1-123-356-00	ELECT	10MF	20%	16V
C606	1-124-126-00	ELECT	47MF	20%	16V
C607	1-101-004-00	CERAMIC	0.01MF		50V
C701	1-123-874-91	ELECT	470MF	20%	16V
C703	1-101-004-00	CERAMIC	0.01MF		50V
C704	1-101-004-00	CERAMIC	0.01MF		50V
C705	1-126-101-11	ELECT	100MF	20%	16V
C706	1-126-101-11	ELECT	100MF	20%	16V
C738	1-124-046-00	ELECT	10MF	20%	160V
C739	1-108-692-11	MYLAR	0.01MF	10%	200V
C740	1-124-046-00	ELECT	10MF	20%	160V

CONNECTOR

CA1	*1-566-057-11	PIN, CONNECTOR 5P
CA2	*1-566-057-11	PIN, CONNECTOR 5P
CA3	*1-566-057-11	PIN, CONNECTOR 5P
CA4	*1-566-055-11	PIN, CONNECTOR 3P
CA5	*1-566-060-11	PIN, CONNECTOR 8P
CA6	*1-566-054-11	PIN, CONNECTOR 2P
CA7	*1-566-054-11	PIN, CONNECTOR 2P
CA8	*1-566-057-11	PIN, CONNECTOR 5P
CA9	*1-566-056-11	PIN, CONNECTOR 4P
CA10	*1-566-056-11	PIN, CONNECTOR 4P
CA11	*1-566-056-11	PIN, CONNECTOR 4P
CA12	*1-508-784-00	PIN, CONNECTOR (5MM PITCH) 1P
CA13	*1-508-784-00	PIN, CONNECTOR (5MM PITCH) 1P
CA14	*1-508-784-00	PIN, CONNECTOR (5MM PITCH) 1P

TRIMMER

CV1	1-141-181-11	CAP, TRIMMER
CV201	1-141-181-11	CAP, TRIMMER
CV401	1-141-181-11	CAP, TRIMMER

DIODE

D1	8-719-110-12	DIODE RD9.1ES-B1
D2	8-719-911-19	DIODE 1SS119
D3	8-719-911-19	DIODE 1SS119
D4	8-719-110-22	DIODE RD11ES-B2
D5	8-719-901-83	DIODE 1SS83
D6	8-719-901-83	DIODE 1SS83
D7	8-719-911-19	DIODE 1SS119
D8	8-719-911-19	DIODE 1SS119
D15	8-719-971-20	DIODE ERC38-06
D201	8-719-110-12	DIODE RD9.1ES-B1
D202	8-719-911-19	DIODE 1SS119
D203	8-719-911-19	DIODE 1SS119
D204	8-719-110-22	DIODE RD11ES-B2
D205	8-719-901-83	DIODE 1SS83
D206	8-719-901-83	DIODE 1SS83
D207	8-719-911-19	DIODE 1SS119
D208	8-719-911-19	DIODE 1SS119
D215	8-719-971-20	DIODE ERC38-06
D401	8-719-110-12	DIODE RD9.1ES-B1
D402	8-719-911-19	DIODE 1SS119
D403	8-719-911-19	DIODE 1SS119
D404	8-719-110-22	DIODE RD11ES-B2
D405	8-719-901-83	DIODE 1SS83
D406	8-719-901-83	DIODE 1SS83
D407	8-719-911-19	DIODE 1SS119
D408	8-719-911-19	DIODE 1SS119
D415	8-719-971-20	DIODE ERC38-06
D601	8-719-109-96	DIODE RD6.8ES-B1
D602	8-719-911-19	DIODE 1SS119

IC

IC2	8-759-007-40	IC TL082CP
IC3	8-759-007-40	IC TL082CP
IC4	8-759-240-53	IC TC4053BP
IC202	8-759-007-40	IC TL082CP
IC203	8-759-007-40	IC TL082CP
IC204	8-759-240-53	IC TC4053BP
IC402	8-759-007-40	IC TL082CP
IC403	8-759-007-40	IC TL082CP
IC404	8-759-240-53	IC TC4053BP

JACK

J1	*1-526-575-00	SOCKET, PLUG 1P
J201	*1-526-575-00	SOCKET, PLUG 1P
J401	*1-526-575-00	SOCKET, PLUG 1P

COIL

L1	1-408-415-00	INDUCTOR	33UH
L2	1-408-415-00	INDUCTOR	33UH
L101	1-408-231-00	INDUCTOR	1MMH
L102	1-408-231-00	INDUCTOR	1MMH
L103	1-408-096-00	INDUCTOR	470UH
L104	1-408-096-00	INDUCTOR	470UH
L201	1-408-415-00	INDUCTOR	33UH
L202	1-408-415-00	INDUCTOR	33UH
L301	1-408-231-00	INDUCTOR	1MMH
L302	1-408-231-00	INDUCTOR	1MMH
L303	1-408-096-00	INDUCTOR	470UH
L304	1-408-096-00	INDUCTOR	470UH
L401	1-408-415-00	INDUCTOR	33UH
L402	1-408-415-00	INDUCTOR	33UH
L501	1-408-231-00	INDUCTOR	1MMH
L502	1-408-231-00	INDUCTOR	1MMH
L503	1-408-096-00	INDUCTOR	470UH
L504	1-408-096-00	INDUCTOR	470UH
L601	1-408-415-00	INDUCTOR	33UH
L701	1-408-231-00	INDUCTOR	1MMH
L704	1-408-096-00	INDUCTOR	470UH

CA

Ref.No.	Part No.	Description	Remark
		TRANSISTOR	
Q1	8-729-105-88	TRANSISTOR 2SC2570A	
Q2	8-729-802-37	TRANSISTOR 2SC3595	
Q3	8-729-105-88	TRANSISTOR 2SC2570A	
Q4	8-729-103-19	TRANSISTOR 2SA1206-K1	
Q5	8-729-802-37	TRANSISTOR 2SC3595	
Q6	8-729-805-05	TRANSISTOR 2SC3601	
Q7	8-729-804-58	TRANSISTOR 2SC3600	
Q8	8-729-804-63	TRANSISTOR 2SA1406	
Q9	8-729-802-37	TRANSISTOR 2SC3595	
Q10	8-729-802-44	TRANSISTOR 2SK125-4	
Q11	8-729-802-44	TRANSISTOR 2SK125-4	
Q12	8-729-802-44	TRANSISTOR 2SK125-4	
Q13	8-729-255-12	TRANSISTOR 2SC2551	
Q14	8-729-805-05	TRANSISTOR 2SC3601	
Q15	8-729-802-71	TRANSISTOR 2SA1407	
Q17	8-729-802-44	TRANSISTOR 2SK125-4	
Q18	8-729-119-78	TRANSISTOR 2SC2785-HFE	
Q19	8-729-820-82	TRANSISTOR 2SA1208	
Q20	8-729-820-82	TRANSISTOR 2SA1208	
Q23	8-729-201-04	TRANSISTOR 2SC2878	
Q201	8-729-105-88	TRANSISTOR 2SC2570A	
Q202	8-729-802-37	TRANSISTOR 2SC3595	
Q203	8-729-105-88	TRANSISTOR 2SC2570A	
Q204	8-729-103-19	TRANSISTOR 2SA1206-K1	
Q205	8-729-802-37	TRANSISTOR 2SC3595	
Q206	8-729-805-05	TRANSISTOR 2SC3601	
Q207	8-729-804-58	TRANSISTOR 2SC3600	
Q208	8-729-804-63	TRANSISTOR 2SA1406	
Q209	8-729-802-37	TRANSISTOR 2SC3595	
Q210	8-729-802-44	TRANSISTOR 2SK125-4	
Q211	8-729-802-44	TRANSISTOR 2SK125-4	
Q212	8-729-802-44	TRANSISTOR 2SK125-4	
Q213	8-729-255-12	TRANSISTOR 2SC2551	
Q214	8-729-805-05	TRANSISTOR 2SC3601	
Q215	8-729-802-71	TRANSISTOR 2SA1407	
Q217	8-729-802-44	TRANSISTOR 2SK125-4	
Q218	8-729-119-78	TRANSISTOR 2SC2785-HFE	
Q219	8-729-820-82	TRANSISTOR 2SA1208	
Q220	8-729-820-82	TRANSISTOR 2SA1208	
Q223	8-729-201-04	TRANSISTOR 2SC2878	
Q401	8-729-105-88	TRANSISTOR 2SC2570A	
Q402	8-729-802-37	TRANSISTOR 2SC3595	
Q403	8-729-105-88	TRANSISTOR 2SC2570A	
Q404	8-729-103-19	TRANSISTOR 2SA1206-K1	
Q405	8-729-802-37	TRANSISTOR 2SC3595	
Q406	8-729-805-05	TRANSISTOR 2SC3601	
Q407	8-729-804-58	TRANSISTOR 2SC3600	
Q408	8-729-804-63	TRANSISTOR 2SA1406	
Q409	8-729-802-37	TRANSISTOR 2SC3595	
Q410	8-729-802-44	TRANSISTOR 2SK125-4	
Q411	8-729-802-44	TRANSISTOR 2SK125-4	
Q412	8-729-802-44	TRANSISTOR 2SK125-4	
Q413	8-729-255-12	TRANSISTOR 2SC2551	
Q414	8-729-805-05	TRANSISTOR 2SC3601	
Q415	8-729-802-71	TRANSISTOR 2SA1407	
Q417	8-729-802-44	TRANSISTOR 2SK125-4	
Q418	8-729-119-78	TRANSISTOR 2SC2785-HFE	
Q419	8-729-820-82	TRANSISTOR 2SA1208	
Q420	8-729-820-82	TRANSISTOR 2SA1208	
Q423	8-729-201-04	TRANSISTOR 2SC2878	
Q601	8-729-105-88	TRANSISTOR 2SC2570A	
Q602	8-729-201-04	TRANSISTOR 2SC2878	
Q603	8-729-105-88	TRANSISTOR 2SC2570A	
Q604	8-729-105-88	TRANSISTOR 2SC2570A	
Q605	8-729-105-88	TRANSISTOR 2SC2570A	
Q606	8-729-802-37	TRANSISTOR 2SC3595	
Q607	8-729-805-05	TRANSISTOR 2SC3601	
Q608	8-729-805-05	TRANSISTOR 2SC3601	
Q609	8-729-802-71	TRANSISTOR 2SA1407	
		RESISTOR	
R1	1-214-702-00	METAL 75 1% 1/4W	
R2	1-249-405-11	CARBON 100 5% 1/4W	
R3	1-249-420-11	CARBON 1.8K 5% 1/4W	
R4	1-215-415-00	METAL 560 1% 1/6W	
R5	1-215-397-00	METAL 100 1% 1/6W	
R6	1-215-426-00	METAL 1.6K 1% 1/6W	
R7	1-215-421-00	METAL 1K 1% 1/6W	
R8	1-215-413-00	METAL 470 1% 1/6W	
R9	1-215-445-00	METAL 10K 1% 1/6W	
R10	1-249-393-11	CARBON 10 5% 1/4W	
R11	1-249-405-11	CARBON 100 5% 1/4W	
R12	1-215-401-11	METAL 150 1% 1/6W	
R13	1-249-405-11	CARBON 100 5% 1/4W	
R14	1-249-397-11	CARBON 22 5% 1/4W	
R15	1-249-405-11	CARBON 100 5% 1/4W	
R16	1-214-697-00	METAL 47 1% 1/4W	
R17	1-215-373-31	METAL 10 1% 1/6W	
R18	1-218-353-11	METAL 1.5K 1% 10W	
R19	1-215-421-00	METAL 1K 1% 1/6W	
R20	1-249-421-11	CARBON 2.2K 5% 1/4W	
R21	1-249-421-11	CARBON 2.2K 5% 1/4W	
R22	1-249-397-11	CARBON 22 5% 1/4W	
R23	1-249-397-11	CARBON 22 5% 1/4W	
R26	1-215-410-00	METAL 360 1% 1/6W	
R27	1-215-401-11	METAL 150 1% 1/6W	
R28	1-249-435-11	CARBON 33K 5% 1/4W	
R29	1-249-441-11	CARBON 100K 5% 1/4W	
R30	1-249-431-11	CARBON 15K 5% 1/4W	
R31	1-249-429-11	CARBON 10K 5% 1/4W	
R32	1-249-435-11	CARBON 33K 5% 1/4W	
R33	1-249-395-11	CARBON 15 5% 1/4W	
R34	1-249-395-11	CARBON 15 5% 1/4W	
R35	1-215-449-00	METAL 15K 1% 1/6W	
R36	1-202-549-00	SOLID 100 5% 1/2W	
R37	1-215-403-00	METAL 180 1% 1/6W	
R38	1-215-401-11	METAL 150 1% 1/6W	
R41	1-215-421-00	METAL 1K 1% 1/6W	
R42	1-215-445-00	METAL 10K 1% 1/6W	
R44	1-249-429-11	CARBON 10K 5% 1/4W	
R45	1-249-441-11	CARBON 100K 5% 1/4W	
R46	1-249-417-11	CARBON 1K 5% 1/4W	
R47	1-249-429-11	CARBON 10K 5% 1/4W	
R48	1-215-457-00	METAL 33K 1% 1/6W	
R49	1-215-409-00	METAL 330 1% 1/6W	
R50	1-215-440-00	METAL 6.2K 1% 1/6W	
R51	1-249-433-11	CARBON 22K 5% 1/4W	
R52	1-249-421-11	CARBON 2.2K 5% 1/4W	
R53	1-249-421-11	CARBON 2.2K 5% 1/4W	
R54	1-215-433-00	METAL 3.3K 1% 1/6W	
R55	1-215-433-00	METAL 3.3K 1% 1/6W	
R56	1-215-441-00	METAL 6.8K 1% 1/6W	
R57	1-215-433-00	METAL 3.3K 1% 1/6W	
R58	1-249-429-11	CARBON 10K 5% 1/4W	
R59	1-249-426-11	CARBON 5.6K 5% 1/4W	
R60	1-249-429-11	CARBON 10K 5% 1/4W	

Ref.No.	Part No.	Description				Remark
R61	1-249-426-11	CARBON	5.6K	5%	1/4W	
R62	1-249-397-11	CARBON	22	5%	1/4W	
R63	1-215-438-00	METAL	5.1K	1%	1/6W	
R64	1-214-908-00	METAL	62K	1%	1/2W	
R65	1-249-405-11	CARBON	100	5%	1/4W	
R66	1-249-440-11	CARBON	82K	5%	1/4W	
R67	1-247-903-00	CARBON	1M	5%	1/4W	
R68	1-249-406-11	CARBON	120	5%	1/4W	
R73	1-249-400-11	CARBON	39	5%	1/4W	
R74	1-249-400-11	CARBON	39	5%	1/4W	
R76	1-202-549-00	SOLID	100	5%	1/2W	
R80	1-249-405-11	CARBON	100	5%	1/4W	
R201	1-214-702-00	METAL	75	1%	1/4W	
R202	1-249-405-11	CARBON	100	5%	1/4W	
R203	1-249-420-11	CARBON	1.8K	5%	1/4W	
R204	1-215-415-00	METAL	560	1%	1/6W	
R205	1-215-397-00	METAL	100	1%	1/6W	
R206	1-215-426-00	METAL	1.6K	1%	1/6W	
R207	1-215-421-00	METAL	1K	1%	1/6W	
R208	1-215-413-00	METAL	470	1%	1/6W	
R209	1-215-445-00	METAL	10K	1%	1/6W	
R210	1-249-393-11	CARBON	10	5%	1/4W	
R211	1-249-405-11	CARBON	100	5%	1/4W	
R212	1-215-401-11	METAL	150	1%	1/6W	
R213	1-249-405-11	CARBON	100	5%	1/4W	
R214	1-249-397-11	CARBON	22	5%	1/4W	
R215	1-249-405-11	CARBON	100	5%	1/4W	
R216	1-214-697-00	METAL	47	1%	1/4W	
R217	1-215-373-31	METAL	10	1%	1/6W	
R218	1-218-353-11	METAL	1.5K	1%	10W	
R219	1-215-421-00	METAL	1K	1%	1/6W	
R220	1-249-421-11	CARBON	2.2K	5%	1/4W	
R221	1-249-421-11	CARBON	2.2K	5%	1/4W	
R222	1-249-397-11	CARBON	22	5%	1/4W	
R223	1-249-397-11	CARBON	22	5%	1/4W	
R226	1-215-410-00	METAL	360	1%	1/6W	
R227	1-215-401-11	METAL	150	1%	1/6W	
R228	1-249-435-11	CARBON	33K	5%	1/4W	
R229	1-249-441-11	CARBON	100K	5%	1/4W	
R230	1-249-431-11	CARBON	15K	5%	1/4W	
R231	1-249-429-11	CARBON	10K	5%	1/4W	
R232	1-249-435-11	CARBON	33K	5%	1/4W	
R233	1-249-395-11	CARBON	15	5%	1/4W	
R234	1-249-395-11	CARBON	15	5%	1/4W	
R235	1-215-449-00	METAL	15K	1%	1/6W	
R236	1-202-549-00	SOLID	100	5%	1/2W	
R237	1-215-403-00	METAL	180	1%	1/6W	
R238	1-215-401-11	METAL	150	1%	1/6W	
R241	1-215-421-00	METAL	1K	1%	1/6W	
R242	1-215-445-00	METAL	10K	1%	1/6W	
R244	1-249-429-11	CARBON	10K	5%	1/4W	
R245	1-249-441-11	CARBON	100K	5%	1/4W	
R246	1-249-417-11	CARBON	1K	5%	1/4W	
R247	1-249-429-11	CARBON	10K	5%	1/4W	
R248	1-215-457-00	METAL	33K	1%	1/6W	
R249	1-215-409-00	METAL	330	1%	1/6W	
R250	1-215-440-00	METAL	6.2K	1%	1/6W	
R251	1-249-433-11	CARBON	22K	5%	1/4W	
R252	1-249-421-11	CARBON	2.2K	5%	1/4W	
R253	1-249-421-11	CARBON	2.2K	5%	1/4W	
R254	1-215-433-00	METAL	3.3K	1%	1/6W	
R255	1-215-433-00	METAL	3.3K	1%	1/6W	
R256	1-215-441-00	METAL	6.8K	1%	1/6W	
R257	1-215-433-00	METAL	3.3K	1%	1/6W	
R258	1-249-429-11	CARBON	10K	5%	1/4W	

Ref.No.	Part No.	Description				Remark
R259	1-249-426-11	CARBON	5.6K	5%	1/4W	
R260	1-249-429-11	CARBON	10K	5%	1/4W	
R261	1-249-426-11	CARBON	5.6K	5%	1/4W	
R262	1-249-397-11	CARBON	22	5%	1/4W	
R263	1-215-438-00	METAL	5.1K	1%	1/6W	
R264	1-214-908-00	METAL	62K	1%	1/2W	
R266	1-249-440-11	CARBON	82K	5%	1/4W	
R267	1-247-903-00	CARBON	1M	5%	1/4W	
R268	1-249-406-11	CARBON	120	5%	1/4W	
R273	1-249-400-11	CARBON	39	5%	1/4W	
R274	1-249-400-11	CARBON	39	5%	1/4W	
R276	1-202-549-00	SOLID	100	5%	1/2W	
R280	1-249-405-11	CARBON	100	5%	1/4W	
R401	1-214-702-00	METAL	75	1%	1/4W	
R402	1-249-405-11	CARBON	100	5%	1/4W	
R403	1-249-420-11	CARBON	1.8K	5%	1/4W	
R404	1-215-415-00	METAL	560	1%	1/6W	
R405	1-215-397-00	METAL	100	1%	1/6W	
R406	1-215-426-00	METAL	1.6K	1%	1/6W	
R407	1-215-421-00	METAL	1K	1%	1/6W	
R408	1-215-413-00	METAL	470	1%	1/6W	
R409	1-215-445-00	METAL	10K	1%	1/6W	
R410	1-249-393-11	CARBON	10	5%	1/4W	
R411	1-249-405-11	CARBON	100	5%	1/4W	
R412	1-215-401-11	METAL	150	1%	1/6W	
R413	1-249-405-11	CARBON	100	5%	1/4W	
R414	1-249-397-11	CARBON	22	5%	1/4W	
R415	1-215-405-00	METAL	220	1%	1/6W	
R416	1-214-697-00	METAL	47	1%	1/4W	
R417	1-215-373-31	METAL	10	1%	1/6W	
R418	1-218-353-11	METAL	1.5K	1%	10W	
R419	1-215-421-00	METAL	1K	1%	1/6W	
R420	1-249-421-11	CARBON	2.2K	5%	1/4W	
R421	1-249-421-11	CARBON	2.2K	5%	1/4W	
R422	1-249-397-11	CARBON	22	5%	1/4W	
R423	1-249-397-11	CARBON	22	5%	1/4W	
R426	1-215-410-00	METAL	360	1%	1/6W	
R427	1-215-401-11	METAL	150	1%	1/6W	
R428	1-249-435-11	CARBON	33K	5%	1/4W	
R429	1-249-441-11	CARBON	100K	5%	1/4W	
R430	1-249-431-11	CARBON	15K	5%	1/4W	
R431	1-249-429-11	CARBON	10K	5%	1/4W	
R432	1-249-435-11	CARBON	33K	5%	1/4W	
R433	1-249-395-11	CARBON	15	5%	1/4W	
R434	1-249-395-11	CARBON	15	5%	1/4W	
R435	1-215-449-00	METAL	15K	1%	1/6W	
R436	1-202-549-00	SOLID	100	5%	1/2W	
R437	1-215-403-00	METAL	180	1%	1/6W	
R438	1-215-401-11	METAL	150	1%	1/6W	
R441	1-215-421-00	METAL	1K	1%	1/6W	
R442	1-215-445-00	METAL	10K	1%	1/6W	
R444	1-249-429-11	CARBON	10K	5%	1/4W	
R445	1-249-441-11	CARBON	100K	5%	1/4W	
R446	1-249-417-11	CARBON	1K	5%	1/4W	
R447	1-249-429-11	CARBON	10K	5%	1/4W	
R448	1-215-457-00	METAL	33K	1%	1/6W	
R449	1-215-409-00	METAL	330	1%	1/6W	
R450	1-215-440-00	METAL	6.2K	1%	1/6W	
R451	1-249-433-11	CARBON	22K	5%	1/4W	
R452	1-249-421-11	CARBON	2.2K	5%	1/4W	
R453	1-249-421-11	CARBON	2.2K	5%	1/4W	
R454	1-215-433-00	METAL	3.3K	1%	1/6W	
R455	1-215-433-00	METAL	3.3K	1%	1/6W	
R456	1-215-441-00	METAL	6.8K	1%	1/6W	

CA DA

Ref.No.	Part No.	Description				Remark
R457	1-215-433-00	METAL	3.3K	1%	1/6W	
R458	1-249-429-11	CARBON	10K	5%	1/4W	
R459	1-249-426-11	CARBON	5.6K	5%	1/4W	
R460	1-249-429-11	CARBON	10K	5%	1/4W	
R461	1-249-426-11	CARBON	5.6K	5%	1/4W	
R462	1-249-397-11	CARBON	22	5%	1/4W	
R463	1-215-438-00	METAL	5.1K	1%	1/6W	
R464	1-214-908-00	METAL	62K	1%	1/2W	
R465	1-249-405-11	CARBON	100	5%	1/4W	
R466	1-249-440-11	CARBON	82K	5%	1/4W	
R467	1-247-903-00	CARBON	1M	5%	1/4W	
R468	1-249-406-11	CARBON	120	5%	1/4W	
R473	1-249-400-11	CARBON	39	5%	1/4W	
R474	1-249-400-11	CARBON	39	5%	1/4W	
R476	1-202-549-00	SOLID	100	5%	1/2W	
R480	1-249-405-11	CARBON	100	5%	1/4W	
R601	1-249-430-11	CARBON	12K	5%	1/4W	
R602	1-249-427-11	CARBON	6.8K	5%	1/4W	
R603	1-249-434-11	CARBON	27K	5%	1/4W	
R604	1-249-421-11	CARBON	2.2K	5%	1/4W	
R605	1-249-441-11	CARBON	100K	5%	1/4W	
R606	1-249-405-11	CARBON	100	5%	1/4W	
R607	1-249-405-11	CARBON	100	5%	1/4W	
R608	1-215-435-00	METAL	3.9K	1%	1/6W	
R609	1-215-413-00	METAL	470	1%	1/6W	
R610	1-249-405-11	CARBON	100	5%	1/4W	
R611	1-215-429-00	METAL	2.2K	1%	1/6W	
R612	1-215-421-00	METAL	1K	1%	1/6W	
R613	1-249-413-11	CARBON	470	5%	1/4W	
R614	1-249-405-11	CARBON	100	5%	1/4W	
R615	1-249-405-11	CARBON	100	5%	1/4W	
R616	1-249-405-11	CARBON	100	5%	1/4W	
R617	1-215-895-11	METAL OXIDE	3.3K	5%	2W	F
R618	1-249-427-11	CARBON	6.8K	5%	1/4W	
R619	1-215-879-51	METAL OXIDE	47K	5%	1W	F
R620	1-215-441-00	METAL	6.8K	1%	1/6W	

VARIABLE RESISTOR

RV1	1-237-518-21	RES, ADJ, CERMET 10K				
RV2	1-237-519-21	RES, ADJ, CERMET 20K				
RV201	1-237-518-21	RES, ADJ, CERMET 10K				
RV202	1-237-519-21	RES, ADJ, CERMET 20K				
RV401	1-237-518-21	RES, ADJ, CERMET 10K				
RV402	1-237-519-21	RES, ADJ, CERMET 20K				

****

*A-1345-650-A	DA BOARD, COMPLETE	
	**********	
3-618-225-00	NUT, PLATE	
*4-353-708-00	HOOK, FINGER	
4-378-915-01	NUT (M2.6), PLATE	

CAPACITOR

C1	1-101-004-00	CERAMIC	0.01MF		50V
C2	1-130-471-00	MYLAR	0.001MF	5%	50V
C3	1-102-978-00	CERAMIC	220PF	5%	50V
C4	1-136-169-00	FILM	0.22MF	5%	50V
C5	1-123-356-00	ELECT	10MF	20%	16V
C6	1-136-153-00	FILM	0.01MF	5%	50V
C7	1-123-356-00	ELECT	10MF	20%	16V
C8	1-123-380-00	ELECT	1MF	20%	50V
C9	1-136-165-00	FILM	0.1MF	5%	50V
C10	1-101-004-00	CERAMIC	0.01MF		50V
C11	1-101-004-00	CERAMIC	0.01MF		50V
C12	1-123-356-00	ELECT	10MF	20%	16V
C13	1-130-475-00	MYLAR	0.0022MF	5%	50V
C14	1-101-004-00	CERAMIC	0.01MF		50V
C15	1-123-381-00	ELECT	2.2MF	20%	50V
C16	1-123-381-00	ELECT	2.2MF	20%	50V
C17	1-124-274-00	ELECT	4.7MF	20%	50V
C18	1-123-369-00	ELECT	4.7MF	20%	50V
C19	1-123-356-00	ELECT	10MF	20%	16V
C20	1-101-004-00	CERAMIC	0.01MF		50V
C21	1-101-004-00	CERAMIC	0.01MF		50V
C24	1-123-321-00	ELECT	220MF	20%	16V
C25	1-123-321-00	ELECT	220MF	20%	16V
C26	1-123-321-00	ELECT	220MF	20%	16V
C27	1-123-321-00	ELECT	220MF	20%	16V
C28	1-136-165-00	FILM	0.1MF	5%	50V
C29	1-101-004-00	CERAMIC	0.01MF		50V
C30	1-101-004-00	CERAMIC	0.01MF		50V
C32	1-136-169-00	FILM	0.22MF	5%	50V
C34	1-123-333-00	ELECT	100MF	20%	16V
C35	1-124-274-00	ELECT	4.7MF	20%	50V
C36	1-101-004-00	CERAMIC	0.01MF		50V
C37	1-101-004-00	CERAMIC	0.01MF		50V
C38	1-123-356-00	ELECT	10MF	20%	16V
C39	1-124-270-11	ELECT	0.47MF	20%	50V
C40	1-136-165-00	FILM	0.1MF	5%	50V
C41	1-123-356-00	ELECT	10MF	20%	16V
C42	1-101-004-00	CERAMIC	0.01MF		50V
C43	1-101-004-00	CERAMIC	0.01MF		50V
C44	1-123-356-00	ELECT	10MF	20%	16V
C45	1-130-477-00	MYLAR	0.0033MF	5%	50V
C46	1-123-356-00	ELECT	10MF	20%	16V
C47	1-101-004-00	CERAMIC	0.01MF		50V
C48	1-101-004-00	CERAMIC	0.01MF		50V
C49	1-101-004-00	CERAMIC	0.01MF		50V
C50	1-123-321-00	ELECT	220MF	20%	16V
C51	1-123-356-00	ELECT	10MF	20%	16V
C52	1-130-471-00	MYLAR	0.001MF	5%	50V
C53	1-101-004-00	CERAMIC	0.01MF		50V
C54	1-101-004-00	CERAMIC	0.01MF		50V
C55	1-123-356-00	ELECT	10MF	20%	16V
C56	1-101-004-00	CERAMIC	0.01MF		50V
C57	1-130-471-00	MYLAR	0.001MF	5%	50V
C58	1-123-356-00	ELECT	10MF	20%	16V
C59	1-101-004-00	CERAMIC	0.01MF		50V
C61	1-123-356-00	ELECT	10MF	20%	16V
C62	1-101-004-00	CERAMIC	0.01MF		50V
C63	1-101-004-00	CERAMIC	0.01MF		50V
C64	1-123-380-00	ELECT	1MF	20%	50V
C65	1-130-471-00	MYLAR	0.001MF	5%	50V
C67	1-101-004-00	CERAMIC	0.01MF		50V
C68	1-130-471-00	MYLAR	0.001MF	5%	50V
C69	1-101-004-00	CERAMIC	0.01MF		50V
C70	1-101-004-00	CERAMIC	0.01MF		50V
C71	1-123-356-00	ELECT	10MF	20%	16V
C72	1-101-004-00	CERAMIC	0.01MF		50V
C74	1-130-471-00	MYLAR	0.001MF	5%	50V
C75	1-136-165-00	FILM	0.1MF	5%	50V
C76	1-101-004-00	CERAMIC	0.01MF		50V
C77	1-101-004-00	CERAMIC	0.01MF		50V
C78	1-123-356-00	ELECT	10MF	20%	16V
C79	1-136-169-00	FILM	0.22MF	5%	50V
C80	1-101-004-00	CERAMIC	0.01MF		50V
C81	1-101-004-00	CERAMIC	0.01MF		50V

Ref.No.	Part No.	Description			Remark
C82	1-101-004-00	CERAMIC	0.01MF		50V
C83	1-101-004-00	CERAMIC	0.01MF		50V
C84	1-124-274-00	ELECT	4.7MF	20%	50V
C85	1-124-274-00	ELECT	4.7MF	20%	50V
C86	1-123-356-00	ELECT	10MF	20%	16V
C87	1-124-274-00	ELECT	4.7MF	20%	50V
C88	1-136-165-00	FILM	0.1MF	5%	50V
C89	1-101-004-00	CERAMIC	0.01MF		50V
C100	1-130-479-00	MYLAR	0.0047MF	5%	50V
C101	1-130-479-00	MYLAR	0.0047MF	5%	50V
C102	1-130-479-00	MYLAR	0.0047MF	5%	50V
C103	1-130-479-00	MYLAR	0.0047MF	5%	50V
C104	1-101-004-00	CERAMIC	0.01MF		50V
C108	1-136-153-00	FILM	0.01MF	5%	50V
C109	1-136-165-00	FILM	0.1MF	5%	50V
C110	1-101-004-00	CERAMIC	0.01MF		50V
C112	1-101-004-00	CERAMIC	0.01MF		50V
C113	1-101-004-00	CERAMIC	0.01MF		50V
C114	1-101-004-00	CERAMIC	0.01MF		50V
C115	1-101-004-00	CERAMIC	0.01MF		50V

DIODE

D1	8-719-109-85	DIODE RD5.1ES-B2
D10	8-719-911-19	DIODE 1SS119
D11	8-719-911-19	DIODE 1SS119
D12	8-719-911-19	DIODE 1SS119
D13	8-719-911-19	DIODE 1SS119
D14	8-719-911-19	DIODE 1SS119
D15	8-719-911-19	DIODE 1SS119
D17	8-719-971-20	DIODE ERC38-06
D18	8-719-971-20	DIODE ERC38-06
D25	8-719-971-20	DIODE ERC38-06

CONNECTOR

DA1	*1-562-729-11	CONNECTOR, MULTI 64P

IC

IC1	8-759-981-64	IC LM2903DQ
IC2	8-759-700-81	IC NJM555D
IC3	8-759-981-91	IC RC4558DQ
IC4	8-759-131-11	IC UPC311C
IC5	8-759-981-91	IC RC4558DQ
IC7	8-759-981-91	IC RC4558DQ
IC8	8-759-990-82	IC TL082CP
IC9	8-759-133-90	IC UPC339C
IC10	8-759-981-64	IC LM2903DQ
IC11	8-759-109-88	IC UPC624C
IC12	8-759-981-91	IC RC4558DQ
IC13	8-759-109-88	IC UPC624C
IC14	8-759-981-91	IC RC4558DQ
IC15	8-759-981-91	IC RC4558DQ
IC16	8-759-109-88	IC UPC624C
IC17	8-759-981-91	IC RC4558DQ
IC18	8-759-109-88	IC UPC624C
IC19	8-759-981-91	IC RC4558DQ
IC20	8-759-981-91	IC RC4558DQ
IC21	8-759-990-82	IC TL082CP
IC22	8-759-170-08	IC UPC78M08H
IC23	8-759-700-22	IC NJM79M08A
IC24	8-769-401-89	TRANSISTOR TX-429M
IC25	8-769-401-89	TRANSISTOR TX-429M
IC27	8-759-700-81	IC NJM555D

Ref.No.	Part No.	Description	Remark

TRANSISTOR

Q1	8-729-600-27	TRANSISTOR 2SC634SP
Q2	8-729-600-27	TRANSISTOR 2SC634SP
Q3	8-729-204-83	TRANSISTOR 2SA1048-GR
Q4	8-729-600-27	TRANSISTOR 2SC634SP
Q5	8-729-204-83	TRANSISTOR 2SA1048-GR
Q6	8-729-600-27	TRANSISTOR 2SC634SP
Q7	8-729-105-73	TRANSISTOR 2SK523-L2
Q8	8-729-105-73	TRANSISTOR 2SK523-L2
Q10	8-729-600-27	TRANSISTOR 2SC634SP
Q11	8-729-105-73	TRANSISTOR 2SK523-L2
Q12	8-729-105-73	TRANSISTOR 2SK523-L2
Q13	8-729-600-27	TRANSISTOR 2SC634SP
Q14	8-729-600-27	TRANSISTOR 2SC634SP
Q15	8-729-105-73	TRANSISTOR 2SK523-L2
Q16	8-729-105-73	TRANSISTOR 2SK523-L2
Q21	8-729-105-73	TRANSISTOR 2SK523-L2
Q22	8-729-105-73	TRANSISTOR 2SK523-L2

RESISTOR

R1	1-249-428-11	CARBON	8.2K	5%	1/4W
R2	1-249-431-11	CARBON	15K	5%	1/4W
R3	1-249-428-11	CARBON	8.2K	5%	1/4W
R4	1-249-428-11	CARBON	8.2K	5%	1/4W
R5	1-249-418-11	CARBON	1.2K	5%	1/4W
R6	1-249-417-11	CARBON	1K	5%	1/4W
R7	1-249-437-11	CARBON	47K	5%	1/4W
R8	1-249-417-11	CARBON	1K	5%	1/4W
R9	1-215-427-00	METAL	1.8K	1%	1/6W
R10	1-249-428-11	CARBON	8.2K	5%	1/4W
R11	1-249-428-11	CARBON	8.2K	5%	1/4W
R12	1-249-428-11	CARBON	8.2K	5%	1/4W
R14	1-249-423-11	CARBON	3.3K	5%	1/4W
R15	1-249-425-11	CARBON	4.7K	5%	1/4W
R16	1-249-405-11	CARBON	100	5%	1/4W
R17	1-215-445-00	METAL	10K	1%	1/6W
R18	1-215-429-00	METAL	2.2K	1%	1/6W
R19	1-215-429-00	METAL	2.2K	1%	1/6W
R20	1-215-467-00	METAL	82K	1%	1/6W
R21	1-249-434-11	CARBON	27K	5%	1/4W
R22	1-249-437-11	CARBON	47K	5%	1/4W
R23	1-215-397-00	METAL	100	1%	1/6W
R24	1-249-427-11	CARBON	6.8K	5%	1/4W
R25	1-249-421-11	CARBON	2.2K	5%	1/4W
R26	1-215-439-00	METAL	5.6K	1%	1/6W
R27	1-215-409-00	METAL	330	1%	1/6W
R28	1-215-441-00	METAL	6.8K	1%	1/6W
R29	1-215-449-00	METAL	15K	1%	1/6W
R30	1-215-413-00	METAL	470	1%	1/6W
R31	1-249-431-11	CARBON	15K	5%	1/4W
R32	1-249-431-11	CARBON	15K	5%	1/4W
R33	1-215-427-00	METAL	1.8K	1%	1/6W
R34	1-215-439-00	METAL	5.6K	1%	1/6W
R35	1-215-453-00	METAL	22K	1%	1/6W
R36	1-215-447-00	METAL	12K	1%	1/6W
R37	1-215-373-31	METAL	10	1%	1/6W
R38	1-215-437-00	METAL	4.7K	1%	1/6W
R39	1-215-429-00	METAL	2.2K	1%	1/6W
R40	1-215-445-00	METAL	10K	1%	1/6W
R41	1-215-439-00	METAL	5.6K	1%	1/6W
R42	1-215-429-00	METAL	2.2K	1%	1/6W
R43	1-215-413-00	METAL	470	1%	1/6W

DA DB

Ref.No.	Part No.	Description				Remark
R44	1-215-421-00	METAL	1K	1%	1/6W	
R45	1-249-441-11	CARBON	100K	5%	1/4W	
R46	1-249-431-11	CARBON	15K	5%	1/4W	
R59	1-215-477-00	METAL	220K	1%	1/6W	
R60	1-249-425-11	CARBON	4.7K	5%	1/4W	
R61	1-249-405-11	CARBON	100	5%	1/4W	
R62	1-249-437-11	CARBON	47K	5%	1/4W	
R63	1-249-441-11	CARBON	100K	5%	1/4W	
R64	1-247-903-00	CARBON	1M	5%	1/4W	
R65	1-215-443-00	METAL	8.2K	1%	1/6W	
R66	1-215-397-00	METAL	100	1%	1/6W	
R67	1-215-441-00	METAL	6.8K	1%	1/6W	
R68	1-215-441-00	METAL	6.8K	1%	1/6W	
R69	1-215-427-00	METAL	1.8K	1%	1/6W	
R70	1-215-433-00	METAL	3.3K	1%	1/6W	
R71	1-215-441-00	METAL	6.8K	1%	1/6W	
R72	1-215-433-00	METAL	3.3K	1%	1/6W	
R73	1-215-427-00	METAL	1.8K	1%	1/6W	
R74	1-215-477-00	METAL	220K	1%	1/6W	
R75	1-215-389-00	METAL	47	1%	1/6W	
R76	1-215-413-00	METAL	470	1%	1/6W	
R77	1-215-397-00	METAL	100	1%	1/6W	
R78	1-249-441-11	CARBON	100K	5%	1/4W	
R79	1-249-424-11	CARBON	3.9K	5%	1/4W	
R80	1-249-427-11	CARBON	6.8K	5%	1/4W	
R81	1-249-428-11	CARBON	8.2K	5%	1/4W	
R82	1-249-423-11	CARBON	3.3K	5%	1/4W	
R83	1-249-427-11	CARBON	6.8K	5%	1/4W	
R84	1-249-427-11	CARBON	6.8K	5%	1/4W	
R85	1-249-429-11	CARBON	10K	5%	1/4W	
R86	1-249-429-11	CARBON	10K	5%	1/4W	
R87	1-249-429-11	CARBON	10K	5%	1/4W	
R88	1-249-422-11	CARBON	2.7K	5%	1/4W	
R89	1-249-417-11	CARBON	1K	5%	1/4W	
R94	1-249-429-11	CARBON	10K	5%	1/4W	
R95	1-249-429-11	CARBON	10K	5%	1/4W	
R96	1-247-713-11	CARBON	1K	5%	1/4W	
R97	1-215-437-00	METAL	4.7K	1%	1/6W	
R98	1-215-437-00	METAL	4.7K	1%	1/6W	
R99	1-215-437-00	METAL	4.7K	1%	1/6W	
R100	1-215-437-00	METAL	4.7K	1%	1/6W	
R101	1-215-437-00	METAL	4.7K	1%	1/6W	
R102	1-215-437-00	METAL	4.7K	1%	1/6W	
R103	1-215-437-00	METAL	4.7K	1%	1/6W	
R104	1-215-437-00	METAL	4.7K	1%	1/6W	
R105	1-215-445-00	METAL	10K	1%	1/6W	
R106	1-249-425-11	CARBON	4.7K	5%	1/4W	
R107	1-215-445-00	METAL	10K	1%	1/6W	
R108	1-215-445-00	METAL	10K	1%	1/6W	
R109	1-215-445-00	METAL	10K	1%	1/6W	
R110	1-215-445-00	METAL	10K	1%	1/6W	
R111	1-249-425-11	CARBON	4.7K	5%	1/4W	
R112	1-215-445-00	METAL	10K	1%	1/6W	
R113	1-215-463-00	METAL	56K	1%	1/6W	
R114	1-215-437-00	METAL	4.7K	1%	1/6W	
R115	1-215-445-00	METAL	10K	1%	1/6W	
R116	1-215-445-00	METAL	10K	1%	1/6W	
R117	1-249-425-11	CARBON	4.7K	5%	1/4W	
R118	1-215-445-00	METAL	10K	1%	1/6W	
R119	1-215-433-00	METAL	3.3K	1%	1/6W	
R120	1-215-445-00	METAL	10K	1%	1/6W	
R121	1-249-425-11	CARBON	4.7K	5%	1/4W	
R122	1-215-445-00	METAL	10K	1%	1/6W	
R123	1-215-461-00	METAL	47K	1%	1/6W	
R124	1-249-421-11	CARBON	2.2K	5%	1/4W	
R125	1-249-427-11	CARBON	6.8K	5%	1/4W	
R126	1-249-427-11	CARBON	6.8K	5%	1/4W	
R127	1-249-427-11	CARBON	6.8K	5%	1/4W	
R128	1-249-441-11	CARBON	100K	5%	1/4W	
R129	1-215-437-00	METAL	4.7K	1%	1/6W	
R130	1-215-437-00	METAL	4.7K	1%	1/6W	
R131	1-215-437-00	METAL	4.7K	1%	1/6W	
R132	1-215-437-00	METAL	4.7K	1%	1/6W	
R133	1-215-437-00	METAL	4.7K	1%	1/6W	
R134	1-215-437-00	METAL	4.7K	1%	1/6W	
R135	1-215-437-00	METAL	4.7K	1%	1/6W	
R136	1-215-437-00	METAL	4.7K	1%	1/6W	
R137	1-249-425-11	CARBON	4.7K	5%	1/4W	
R138	1-215-455-00	METAL	27K	1%	1/6W	
R139	1-249-405-11	CARBON	100	5%	1/4W	
R140	1-249-437-11	CARBON	47K	5%	1/4W	
R141	1-249-441-11	CARBON	100K	5%	1/4W	
R142	1-247-903-00	CARBON	1M	5%	1/4W	
R143	1-215-409-00	METAL	330	1%	1/6W	
R144	1-215-427-00	METAL	1.8K	1%	1/6W	
R145	1-215-425-00	METAL	1.5K	1%	1/6W	
R149	1-249-420-11	CARBON	1.8K	5%	1/4W	
R150	1-215-427-00	METAL	1.8K	1%	1/6W	
R151	1-249-441-11	CARBON	100K	5%	1/4W	
R152	1-215-459-00	METAL	39K	1%	1/6W	
R153	1-215-433-00	METAL	3.3K	1%	1/6W	
R154	1-215-413-00	METAL	470	1%	1/6W	
R155	1-249-428-11	CARBON	8.2K	5%	1/4W	
R156	1-249-441-11	CARBON	100K	5%	1/4W	
R160	1-215-433-00	METAL	3.3K	1%	1/6W	
R161	1-249-429-11	CARBON	10K	5%	1/4W	
R167	1-215-437-00	METAL	4.7K	1%	1/6W	
R168	1-249-441-11	CARBON	100K	5%	1/4W	
R169	1-215-397-00	METAL	100	1%	1/6W	
R170	1-215-421-00	METAL	1K	1%	1/6W	
R171	1-215-429-00	METAL	2.2K	1%	1/6W	
R172	1-215-421-00	METAL	1K	1%	1/6W	
R173	1-249-441-11	CARBON	100K	5%	1/4W	
R177	1-215-429-00	METAL	2.2K	1%	1/6W	

VARIABLE RESISTOR

RV1	1-237-506-21	RES, ADJ, CERMET 100K			
RV2	1-237-503-21	RES, ADJ, CERMET 10K			

****

	*A-1345-651-A	DB BOARD, COMPLETE			
		**********			
	*1-526-656-00	SOCKET, IC (DP) 20P			
	3-618-225-00	NUT, PLATE			
	*4-353-708-00	HOOK, FINGER			
	4-378-915-01	NUT (M2.6), PLATE			

CAPACITOR

C1	1-123-321-00	ELECT	220MF	20%	16V
C2	1-123-321-00	ELECT	220MF	20%	16V
C3	1-123-321-00	ELECT	220MF	20%	16V
C4	1-123-321-00	ELECT	220MF	20%	16V
C5	1-123-321-00	ELECT	220MF	20%	16V
C6	1-123-356-00	ELECT	10MF	20%	16V
C18	1-101-888-00	CERAMIC	68PF	5%	50V
C19	1-101-004-00	CERAMIC	0.01MF		50V
C20	1-101-004-00	CERAMIC	0.01MF		50V
C21	1-101-888-00	CERAMIC	68PF	5%	50V

Ref.No.	Part No.	Description			Remark
C22	1-101-888-00	CERAMIC	68PF	5%	50V
C23	1-101-004-00	CERAMIC	0.01MF		50V
C24	1-101-004-00	CERAMIC	0.01MF		50V
C25	1-101-888-00	CERAMIC	68PF	5%	50V
C26	1-101-888-00	CERAMIC	68PF	5%	50V
C27	1-101-004-00	CERAMIC	0.01MF		50V
C28	1-101-004-00	CERAMIC	0.01MF		50V
C29	1-101-888-00	CERAMIC	68PF	5%	50V
C30	1-101-888-00	CERAMIC	68PF	5%	50V
C31	1-101-004-00	CERAMIC	0.01MF		50V
C32	1-101-004-00	CERAMIC	0.01MF		50V
C33	1-101-888-00	CERAMIC	68PF	5%	50V
C34	1-101-888-00	CERAMIC	68PF	5%	50V
C35	1-101-004-00	CERAMIC	0.01MF		50V
C36	1-101-004-00	CERAMIC	0.01MF		50V
C37	1-101-888-00	CERAMIC	68PF	5%	50V
C44	1-101-004-00	CERAMIC	0.01MF		50V
C45	1-101-004-00	CERAMIC	0.01MF		50V
C46	1-123-356-00	ELECT	10MF	20%	16V
C47	1-123-333-00	ELECT	100MF	20%	16V
C49	1-102-965-00	CERAMIC	39PF	5%	50V
C50	1-136-165-00	FILM	0.1MF	5%	50V
C51	1-101-004-00	CERAMIC	0.01MF		50V
C52	1-101-004-00	CERAMIC	0.01MF		50V
C53	1-101-004-00	CERAMIC	0.01MF		50V
C55	1-102-961-00	CERAMIC	27PF	5%	50V
C56	1-101-004-00	CERAMIC	0.01MF		50V
C57	1-101-004-00	CERAMIC	0.01MF		50V
C62	1-101-004-00	CERAMIC	0.01MF		50V
C63	1-101-004-00	CERAMIC	0.01MF		50V
C64	1-101-004-00	CERAMIC	0.01MF		50V
C65	1-101-004-00	CERAMIC	0.01MF		50V
C66	1-101-004-00	CERAMIC	0.01MF		50V
C67	1-101-004-00	CERAMIC	0.01MF		50V

DIODE

D1	8-719-971-20	DIODE ERC38-06
D2	8-719-971-20	DIODE ERC38-06
D5	8-719-971-20	DIODE ERC38-06

CONNECTOR

DB1	*1-562-729-11	CONNECTOR, MULTI 64P
DB2	*1-561-724-00	SOCKET, CONNECTOR 2P
DB2	*1-564-431-11	POST, CONNECTOR 3P
DB3	*1-561-724-00	SOCKET, CONNECTOR 2P
DB3	*1-564-431-11	POST, CONNECTOR 3P

IC

IC1	8-759-170-08	IC UPC78M08H
IC2	8-759-700-22	IC NJM79M08A
IC3	8-759-107-33	IC UPC1060C
IC7	8-759-990-82	IC TL082CP
IC8	8-759-990-82	IC TL082CP
IC9	8-759-990-82	IC TL082CP
IC10	8-759-990-82	IC TL082CP
IC11	8-759-990-82	IC TL082CP
IC14	8-759-773-16	IC TBP28L42N-H.PARA
IC16	8-749-900-14	IC CP2005S
IC17	8-749-900-14	IC CP2005S
IC18	8-749-900-14	IC CP2005S
IC19	8-759-773-16	IC TBP28L42N-H.PARA
IC20	8-749-900-14	IC CP2005S
IC21	8-749-900-14	IC CP2005S

Ref.No.	Part No.	Description	Remark
IC22	8-759-040-44	IC MC4044P	
IC23	8-759-040-24	IC MC4024P	
IC24	8-759-911-63	IC SN74S163N	
IC25	8-759-911-63	IC SN74S163N	
IC28	8-759-902-83	IC SN74LS283N	
IC29	8-759-902-83	IC SN74LS283N	
IC30	8-759-773-15	IC TBP28L42N-H.SIN	
IC31	8-759-900-08	IC SN74LS08N	
IC32	8-759-900-04	IC SN74LS04N	
IC33	8-759-982-44	IC RC79L05A	
IC34	8-759-903-92	IC SN74LS682N	

TRANSISTOR

Q7	8-729-600-27	TRANSISTOR 2SC634SP	

RESISTOR

R7	1-215-431-00	METAL	2.7K	1%	1/6W
R8	1-215-431-00	METAL	2.7K	1%	1/6W
R9	1-215-431-00	METAL	2.7K	1%	1/6W
R10	1-215-431-00	METAL	2.7K	1%	1/6W
R11	1-215-437-00	METAL	4.7K	1%	1/6W
R12	1-215-437-00	METAL	4.7K	1%	1/6W
R13	1-215-437-00	METAL	4.7K	1%	1/6W
R14	1-215-437-00	METAL	4.7K	1%	1/6W
R15	1-215-437-00	METAL	4.7K	1%	1/6W
R16	1-215-437-00	METAL	4.7K	1%	1/6W
R17	1-215-437-00	METAL	4.7K	1%	1/6W
R18	1-215-437-00	METAL	4.7K	1%	1/6W
R19	1-215-437-00	METAL	4.7K	1%	1/6W
R20	1-215-437-00	METAL	4.7K	1%	1/6W
R21	1-215-437-00	METAL	4.7K	1%	1/6W
R22	1-215-437-00	METAL	4.7K	1%	1/6W
R23	1-215-437-00	METAL	4.7K	1%	1/6W
R24	1-215-437-00	METAL	4.7K	1%	1/6W
R25	1-215-437-00	METAL	4.7K	1%	1/6W
R26	1-215-437-00	METAL	4.7K	1%	1/6W
R47	1-215-429-00	METAL	2.2K	1%	1/6W
R48	1-215-429-00	METAL	2.2K	1%	1/6W
R49	1-215-429-00	METAL	2.2K	1%	1/6W
R50	1-215-429-00	METAL	2.2K	1%	1/6W
R51	1-215-429-00	METAL	2.2K	1%	1/6W
R52	1-215-429-00	METAL	2.2K	1%	1/6W
R53	1-215-429-00	METAL	2.2K	1%	1/6W
R54	1-215-429-00	METAL	2.2K	1%	1/6W
R55	1-215-429-00	METAL	2.2K	1%	1/6W
R56	1-215-429-00	METAL	2.2K	1%	1/6W
R57	1-249-426-11	CARBON	5.6K	5%	1/4W
R58	1-249-424-11	CARBON	3.9K	5%	1/4W
R59	1-249-417-11	CARBON	1K	5%	1/4W
R60	1-249-417-11	CARBON	1K	5%	1/4W
R61	1-249-420-11	CARBON	1.8K	5%	1/4W
R62	1-249-396-11	CARBON	18	5%	1/4W
R63	1-249-396-11	CARBON	18	5%	1/4W
R66	1-249-417-11	CARBON	1K	5%	1/4W

SWITCH

SW1	1-554-027-00	SWITCH, ROTARY
SW4	1-516-923-21	SWITCH, DIP

DC

Ref.No.	Part No.	Description				Remark
	*A-1345-652-A	DC BOARD, COMPLETE				
		**********				
	3-618-225-00	NUT, PLATE				
	*4-353-708-00	HOOK, FINGER				
	4-378-915-01	NUT (M2.6), PLATE				
		CAPACITOR				
C1	1-101-361-00	CERAMIC	150PF	5%	50V	
C2	1-102-971-00	CERAMIC	82PF	5%	50V	
C3	1-101-004-00	CERAMIC	0.01MF		50V	
C4	1-101-004-00	CERAMIC	0.01MF		50V	
C5	1-101-361-00	CERAMIC	150PF	5%	50V	
C6	1-102-971-00	CERAMIC	82PF	5%	50V	
C7	1-101-004-00	CERAMIC	0.01MF		50V	
C8	1-101-004-00	CERAMIC	0.01MF		50V	
C14	1-102-973-00	CERAMIC	100PF	5%	50V	
C16	1-102-973-00	CERAMIC	100PF	5%	50V	
C17	1-102-973-00	CERAMIC	100PF	5%	50V	
C18	1-102-973-00	CERAMIC	100PF	5%	50V	
C19	1-101-004-00	CERAMIC	0.01MF		50V	
C20	1-101-004-00	CERAMIC	0.01MF		50V	
C21	1-101-004-00	CERAMIC	0.01MF		50V	
C22	1-101-004-00	CERAMIC	0.01MF		50V	
C23	1-101-004-00	CERAMIC	0.01MF		50V	
C24	1-101-004-00	CERAMIC	0.01MF		50V	
C25	1-101-004-00	CERAMIC	0.01MF		50V	
C29	1-123-356-00	ELECT	10MF	20%	16V	
C30	1-123-356-00	ELECT	10MF	20%	16V	
C33	1-123-321-00	ELECT	220MF	20%	16V	
C34	1-123-321-00	ELECT	220MF	20%	16V	
C35	1-123-321-00	ELECT	220MF	20%	16V	
C36	1-123-321-00	ELECT	220MF	20%	16V	
C37	1-101-004-00	CERAMIC	0.01MF		50V	
C38	1-101-004-00	CERAMIC	0.01MF		50V	
C39	1-101-004-00	CERAMIC	0.01MF		50V	
C40	1-101-004-00	CERAMIC	0.01MF		50V	
		DIODE				
D1	8-719-971-20	DIODE ERC38-06				
D2	8-719-971-20	DIODE ERC38-06				
D3	8-719-971-20	DIODE ERC38-06				
		CONNECTOR				
DC1	*1-562-729-11	CONNECTOR, MULTI 64P				
		IC				
IC1	8-759-103-92	IC UPC318C				
IC2	8-759-103-92	IC UPC318C				
IC3	8-759-981-91	IC RC4558DQ				
IC4	8-759-981-91	IC RC4558DQ				
IC10	8-759-107-33	IC UPC1060C				
IC11	8-759-170-08	IC UPC78M08H				
IC12	8-759-700-22	IC NJM79M08A				
IC13	8-759-202-26	IC TC74HC138P				
IC14	8-759-202-26	IC TC74HC138P				
IC15	8-759-202-26	IC TC74HC138P				
IC16	8-759-202-26	IC TC74HC138P				
IC17	8-759-202-26	IC TC74HC138P				
IC18	8-759-202-26	IC TC74HC138P				
IC19	8-759-202-89	IC TC74HC139P				
IC22	8-749-900-14	IC CP2005S				
IC23	8-749-900-14	IC CP2005S				
IC24	8-749-900-14	IC CP2005S				
IC25	8-749-900-14	IC CP2005S				
IC27	8-749-900-14	IC CP2005S				
IC28	8-749-900-14	IC CP2005S				
IC29	8-749-900-14	IC CP2005S				
IC30	8-749-900-14	IC CP2005S				
IC32	8-749-900-14	IC CP2005S				
IC34	8-749-900-14	IC CP2005S				
IC35	8-749-900-14	IC CP2005S				
IC41	8-749-900-14	IC CP2005S				
IC42	8-749-900-14	IC CP2005S				
		RESISTOR				
R7	1-215-431-00	METAL	2.7K	1%	1/6W	
R8	1-215-431-00	METAL	2.7K	1%	1/6W	
R9	1-215-431-00	METAL	2.7K	1%	1/6W	
R10	1-215-431-00	METAL	2.7K	1%	1/6W	
R11	1-215-427-00	METAL	1.8K	1%	1/6W	
R12	1-215-427-00	METAL	1.8K	1%	1/6W	
R13	1-215-431-00	METAL	2.7K	1%	1/6W	
R15	1-215-431-00	METAL	2.7K	1%	1/6W	
R17	1-215-401-11	METAL	150	1%	1/6W	
R18	1-215-419-00	METAL	820	1%	1/6W	
R20	1-215-425-00	METAL	1.5K	1%	1/6W	
R21	1-215-413-00	METAL	470	1%	1/6W	
R22	1-215-431-00	METAL	2.7K	1%	1/6W	
R29	1-215-431-00	METAL	2.7K	1%	1/6W	
R30	1-215-431-00	METAL	2.7K	1%	1/6W	
R31	1-215-431-00	METAL	2.7K	1%	1/6W	
R32	1-215-431-00	METAL	2.7K	1%	1/6W	
R33	1-215-431-00	METAL	2.7K	1%	1/6W	
R35	1-215-431-00	METAL	2.7K	1%	1/6W	
R37	1-215-431-00	METAL	2.7K	1%	1/6W	
R38	1-215-431-00	METAL	2.7K	1%	1/6W	
R39	1-215-401-11	METAL	150	1%	1/6W	
R40	1-215-419-00	METAL	820	1%	1/6W	
R41	1-215-431-00	METAL	2.7K	1%	1/6W	
R42	1-215-425-00	METAL	1.5K	1%	1/6W	
R43	1-215-413-00	METAL	470	1%	1/6W	
R63	1-215-435-00	METAL	3.9K	1%	1/6W	
R64	1-215-435-00	METAL	3.9K	1%	1/6W	
R65	1-215-439-00	METAL	5.6K	1%	1/6W	
R66	1-215-439-00	METAL	5.6K	1%	1/6W	
R67	1-215-395-00	METAL	82	1%	1/6W	
R68	1-215-433-00	METAL	3.3K	1%	1/6W	
R69	1-215-421-00	METAL	1K	1%	1/6W	
R71	1-215-437-00	METAL	4.7K	1%	1/6W	
R90	1-215-435-00	METAL	3.9K	1%	1/6W	
R91	1-215-435-00	METAL	3.9K	1%	1/6W	
R94	1-215-435-00	METAL	3.9K	1%	1/6W	
R95	1-215-435-00	METAL	3.9K	1%	1/6W	
R96	1-215-433-00	METAL	3.3K	1%	1/6W	
R97	1-215-433-00	METAL	3.3K	1%	1/6W	
R98	1-215-441-00	METAL	6.8K	1%	1/6W	
R99	1-215-441-00	METAL	6.8K	1%	1/6W	
R100	1-215-447-00	METAL	12K	1%	1/6W	
R101	1-215-441-00	METAL	6.8K	1%	1/6W	
R102	1-215-441-00	METAL	6.8K	1%	1/6W	
R104	1-215-447-00	METAL	12K	1%	1/6W	
R105	1-215-395-00	METAL	82	1%	1/6W	
R106	1-215-433-00	METAL	3.3K	1%	1/6W	
R107	1-215-437-00	METAL	4.7K	1%	1/6W	
R108	1-215-421-00	METAL	1K	1%	1/6W	

Ref.No.	Part No.	Description				Remark
R110	1-215-445-00	METAL	10K	1%	1/6W	
R111	1-215-445-00	METAL	10K	1%	1/6W	

****

*A-1345-835-A	E BOARD, COMPLETE	
	**********	
3-701-609-00	BUSHING (B), TR	
*4-028-047-01	HEAT SINK, CLIP TYPE	
4-303-844-00	SPACER, MICA (4) MD-17	
*4-304-469-00	HOLDER	
*4-363-147-00	HEAT SINK, H.PIN	
*4-363-404-00	HOLDER, IC	
4-363-414-00	SPACER, MICA	
*4-373-965-01	INSULATOR (SMALL)	
*4-373-966-01	INSULATOR (LARGE)	

CAPACITOR

Ref.No.	Part No.	Description				Remark
C1	1-123-874-91	ELECT	470MF	20%	16V	
C2	1-123-024-51	ELECT	33MF		160V	
C3	1-124-126-00	ELECT	47MF	20%	25V	
C4	1-102-125-00	CERAMIC	0.0047MF	10%	50V	
C5	1-102-824-00	CERAMIC	470PF	5%	50V	
C6	1-108-690-11	MYLAR	0.0068MF	10%	200V	
C7	1-124-046-00	ELECT	10MF		160V	
C8	1-102-030-00	CERAMIC	330PF	10%	500V	
C9	1-136-165-00	FILM	0.1MF	5%	50V	
C10	1-136-090-00	FILM	0.0062MF	3%	2KV	
C11	1-136-318-11	FILM	0.0091MF	3%	2KV	
C12	1-124-046-00	ELECT	10MF		160V	
C13	1-126-101-11	ELECT	100MF	20%	16V	
C14	1-126-101-11	ELECT	100MF	20%	16V	
C15	1-108-626-11	MYLAR	0.01MF	10%	100V	
C16	1-136-117-11	FILM	2MF	5%	200V	
C17	1-136-155-00	FILM	0.015MF	5%	50V	
C18	1-136-153-00	FILM	0.01MF	5%	50V	
C19	1-102-030-00	CERAMIC	330PF	10%	500V	
C20	1-136-111-00	FILM	1MF	5%	200V	
C21	1-136-161-00	FILM	0.047MF	5%	50V	
C22	1-124-448-51	ELECT	1000MF	20%	35V	
C23	1-124-799-11	ELECT	2.2MF	20%	160V	
C24	1-108-690-11	MYLAR	0.0068MF	10%	200V	
C25	1-136-108-00	FILM	0.43MF	5%	200V	
C26	1-124-448-51	ELECT	1000MF	20%	35V	
C27	1-123-947-00	ELECT	10MF	20%	250V	
C28	1-126-174-51	ELECT	10MF	20%	350V	
C29	1-108-688-11	MYLAR	0.0047MF	10%	200V	
C30	1-162-115-00	CERAMIC	330PF	10%	2KV	
C31	1-124-046-00	ELECT	10MF		160V	
C32	1-124-126-00	ELECT	47MF	20%	25V	
C33	1-123-875-11	ELECT	10MF	20%	50V	
C34	1-123-875-11	ELECT	10MF	20%	50V	
C35	1-124-801-11	ELECT	4.7MF	20%	160V	
C36	1-102-973-00	CERAMIC	100PF	5%	50V	
C37	1-136-161-00	FILM	0.047MF	5%	50V	
C38	1-102-947-00	CERAMIC	10PF	0.5PF	50V	
C39	1-124-516-81	ELECT	330MF	20%	50V	
C40	1-124-516-81	ELECT	330MF	20%	50V	
C41	1-101-004-00	CERAMIC	0.01MF		50V	
C42	1-130-471-00	MYLAR	0.001MF	5%	50V	
C43	1-136-161-00	FILM	0.047MF	5%	50V	
C44	1-123-874-91	ELECT	470MF	20%	16V	
C45	1-102-228-00	CERAMIC	470PF	10%	500V	
C46	1-102-038-00	CERAMIC	0.001MF		500V	
C47	1-136-080-00	FILM	0.011MF	3%	2KV	
C48	1-136-111-00	FILM	1MF	5%	200V	
C49	1-136-161-00	FILM	0.047MF	5%	50V	
C50	1-136-111-00	FILM	1MF	5%	200V	
C51	1-123-024-51	ELECT	33MF		160V	
C52	1-123-874-91	ELECT	470MF	20%	16V	
C53	1-124-634-11	ELECT	1MF	20%	450V	
C54	1-124-798-11	ELECT	1MF	20%	160V	
C55	1-124-798-11	ELECT	1MF	20%	160V	
C56	1-130-473-00	MYLAR	0.0015MF	5%	50V	
C57	1-136-153-00	FILM	0.01MF	5%	50V	
C58	1-124-126-00	ELECT	47MF	20%	25V	
C59	1-130-479-00	MYLAR	0.0047MF	5%	50V	
C60	1-136-165-00	FILM	0.1MF	5%	50V	
C61	1-101-004-00	CERAMIC	0.01MF		50V	
C62	1-130-471-00	MYLAR	0.001MF	5%	50V	
C63	1-102-973-00	CERAMIC	100PF	5%	50V	
C64	1-102-824-00	CERAMIC	470PF	5%	50V	
C65	1-123-875-11	ELECT	10MF	20%	50V	
C66	1-123-357-00	ELECT	22MF	20%	50V	
C67	1-123-357-00	ELECT	22MF	20%	50V	
C68	1-136-165-00	FILM	0.1MF	5%	50V	
C69	1-136-165-00	FILM	0.1MF	5%	50V	
C70	1-123-875-11	ELECT	10MF	20%	50V	
C71	1-124-043-91	ELECT	2.2MF	20%	50V	
C72	1-102-824-00	CERAMIC	470PF	5%	50V	
C73	1-136-171-00	FILM	0.33MF	5%	50V	
C74	1-124-124-91	ELECT	220MF	20%	10V	
C75	1-101-004-00	CERAMIC	0.01MF		50V	
C76	1-126-101-11	ELECT	100MF	20%	16V	
C77	1-124-036-91	ELECT	330MF	20%	16V	
C78	1-124-045-00	ELECT	4.7MF	20%	50V	
C79	1-108-638-11	MYLAR	0.1MF	10%	100V	
C80	1-124-791-11	ELECT	1MF	20%	50V	
C81	1-124-126-00	ELECT	47MF	20%	16V	
C82	1-102-110-00	CERAMIC	220PF	10%	50V	
C83	1-136-165-00	FILM	0.1MF	5%	50V	
C84	1-124-041-91	ELECT	220MF	20%	16V	
C85	1-136-165-00	FILM	0.1MF	5%	50V	
C86	1-123-875-11	ELECT	10MF	20%	50V	
C87	1-136-165-00	FILM	0.1MF	5%	50V	
C88	1-136-165-00	FILM	0.1MF	5%	50V	
C90	1-108-694-81	MYLAR	0.015MF	10%	200V	
C95	1-106-371-00	MYLAR	0.015MF	10%	100V	
C97	1-124-646-91	ELECT	22MF	20%	16V	
C98	1-136-282-11	FILM	0.0027MF	3%	2KV	
C99	1-129-716-00	FILM	0.015MF	10%	630V	
C100	1-129-715-00	FILM	0.012MF	10%	630V	
C101	1-136-179-11	FILM	1.5MF	5%	200V	
C103	1-130-479-00	MYLAR	0.0047MF	5%	50V	
C104	1-130-479-00	MYLAR	0.0047MF	5%	50V	
C105	1-124-801-11	ELECT	4.7MF	20%	160V	
C106	1-124-046-00	ELECT	10MF		160V	
C107	1-136-117-11	FILM	2MF	5%	200V	
C108	1-124-126-00	ELECT	47MF	20%	16V	
C110	1-124-126-00	ELECT	47MF	20%	16V	
C112	1-162-318-11	CERAMIC	0.001MF	10%	500V	
C113	1-162-318-11	CERAMIC	0.001MF	10%	500V	
C114	1-136-153-00	FILM	0.01MF	5%	50V	
C115	1-101-004-00	CERAMIC	0.01MF		50V	
C116	1-126-101-11	ELECT	100MF	20%	16V	
C117	1-126-101-11	ELECT	100MF	20%	16V	
C118	1-102-971-00	CERAMIC	82PF	5%	50V	
C119	1-101-004-00	CERAMIC	0.01MF		50V	

E

- The components identified by ⊠ in this manual have been carefully factory-selected for each set in order to satisfy regulations regarding X-ray radiation. Should replacement be required, replace only with the value originally used.

The components identified by shading and mark ⚠ are critical for safety.
Replace only with part number specified.

Ref.No.	Part No.	Description				Remark
C120	1-124-513-11	ELECT	47MF	20%	50V	
C121	1-136-153-00	FILM	0.01MF	5%	50V	
C122	1-136-157-00	FILM	0.022MF	5%	50V	
C123	1-124-513-11	ELECT	47MF	20%	50V	
C124	1-101-004-00	CERAMIC	0.01MF		50V	
C125	1-123-875-11	ELECT	10MF	20%	50V	
C126	1-124-443-00	ELECT	100MF	20%	6.3V	
C128	1-101-004-00	CERAMIC	0.01MF		50V	
C129	1-123-875-11	ELECT	10MF	20%	50V	
C130	1-124-443-00	ELECT	100MF	20%	6.3V	
C133	1-124-126-00	ELECT	47MF	20%	16V	
C134	1-124-126-00	ELECT	47MF	20%	16V	
C135	1-162-318-11	CERAMIC	0.001FM	10%	500V	
C136	1-102-228-00	CERAMIC	470PF	10%	500V	
C137	1-102-228-00	CERAMIC	470PF	10%	500V	

DIODE

D1	8-719-911-19	DIODE 1SS119	
D2	8-719-300-76	DIODE RH-1A	
D3	8-719-300-76	DIODE RH-1A	
D4	8-719-973-95	DIODE ERD09-15	
D5	8-719-928-08	DIODE ERD28-08S	
D6	8-719-971-20	DIODE ERC38-06	
D7	8-719-971-20	DIODE ERC38-06	
D8	8-719-911-19	DIODE 1SS119	
D9	8-719-911-19	DIODE 1SS119	
D10	8-719-911-19	DIODE 1SS119	
D11	8-719-911-19	DIODE 1SS119	
D12	8-719-911-19	DIODE 1SS119	
D13	8-719-300-76	DIODE RH-1A	
D14	8-719-300-76	DIODE RH-1A	
D15	8-719-000-28	THYRISTOR CR02AM-8	
D16	8-719-931-04	DIODE ERD31-04	
D17	8-719-931-04	DIODE ERD31-04	
D18	8-719-971-20	DIODE ERC38-06	
D19	8-719-971-20	DIODE ERC38-06	
D20	8-719-971-20	DIODE ERC38-06	
D21	8-719-911-19	DIODE 1SS119	
D22	8-719-911-19	DIODE 1SS119	
D23	8-719-911-19	DIODE 1SS119	
D24	8-719-911-19	DIODE 1SS119	
D25	8-719-911-19	DIODE 1SS119	
D26	8-719-931-04	DIODE ERD31-04	
D27	8-719-931-04	DIODE ERD31-04	
D28	8-719-300-76	DIODE RH-1A	
D29	8-719-928-08	DIODE ERD28-08S	
D30	8-719-928-08	DIODE ERD28-08S	
D31	8-719-931-04	DIODE ERD31-04	
D32	8-719-901-19	DIODE V11N	
D33	8-759-157-40	IC UPC574J	
D34	8-759-157-40	IC UPC574J	
D35	8-759-157-40	IC UPC574J	
D36	8-759-157-40	IC UPC574J	
D37	8-719-911-19	DIODE 1SS119	
D38	8-719-911-19	DIODE 1SS119	
D39	8-759-157-40	IC UPC574J	
⊠D40	⚠	IC	
D41	8-719-911-19	DIODE 1SS119	
D42	8-719-911-19	DIODE 1SS119	
D43	8-719-911-19	DIODE 1SS119	
D44	8-719-911-19	DIODE 1SS119	
D45	8-719-000-28	THYRISTOR CR02AM-8	
D46	8-719-971-20	DIODE ERC38-06	
D47	8-719-911-19	DIODE 1SS119	
D48	8-719-101-61	DIODE RD6.2E-L2	
D49	8-719-911-19	DIODE 1SS119	
D50	8-719-300-76	DIODE RH-1A	
D51	8-719-101-76	DIODE RD10E-L2	
D52	8-719-101-76	DIODE RD10E-L2	
D53	8-719-911-19	DIODE 1SS119	
D54	8-719-911-19	DIODE 1SS119	
D57	8-769-330-03	THYRISTOR SG-264A	
D58	8-719-971-20	DIODE ERC38-06	
D60	8-719-928-08	DIODE ERD28-08S	
D61	8-719-928-08	DIODE ERD28-08S	
D62	8-719-911-19	DIODE 1SS119	
D63	8-719-945-80	DIODE ERC06-15S	
D65	8-719-911-19	DIODE 1SS119	
D66	8-719-911-19	DIODE 1SS119	
D67	8-719-911-19	DIODE 1SS119	
D68	8-719-911-19	DIODE 1SS119	
D69	8-719-110-39	DIODE RD15ES-B1	
D70	8-719-110-39	DIODE RD15ES-B1	
D71	8-719-911-19	DIODE 1SS119	
D72	8-719-911-19	DIODE 1SS119	
D73	8-719-000-28	THYRISTOR CR02AM-8	
D74	8-719-911-19	DIODE 1SS119	
D76	8-719-000-28	THYRISTOR CR02AM-8	
D77	8-719-911-19	DIODE 1SS119	
D80	8-719-928-08	DIODE ERD28-08S	

CONNECTOR

E1	*1-566-059-11	PIN, CONNECTOR 7P	
E2	*1-566-056-11	PIN, CONNECTOR 4P	
E3	*1-566-056-11	PIN, CONNECTOR 4P	
E4	*1-508-767-00	PIN, CONNECTOR (5MM PITCH) 5P	
E5	*1-508-767-00	PIN, CONNECTOR (5MM PITCH) 5P	
E6	*1-508-784-00	PIN, CONNECTOR (5MM PITCH) 1P	
E7	*1-508-766-00	PIN, CONNECTOR (5MM PITCH) 4P	
E8	*1-566-054-11	PIN, CONNECTOR 2P	
E9	*1-566-054-11	PIN, CONNECTOR 2P	
E10	*1-566-055-11	PIN, CONNECTOR 3P	
E11	*1-566-058-11	PIN, CONNECTOR 6P	
E12	*1-566-054-11	PIN, CONNECTOR 2P	
E13	*1-566-054-11	PIN, CONNECTOR 2P	
E14	*1-508-766-00	PIN, CONNECTOR (5MM PITCH) 4P	
E15	*1-566-055-11	PIN, CONNECTOR 3P	
E16	*1-566-054-11	PIN, CONNECTOR 2P	
E17	*1-566-059-11	PIN, CONNECTOR 7P	
E19	*1-566-054-11	PIN, CONNECTOR 2P	
E20	*1-566-056-11	PIN, CONNECTOR 4P	
E21	*1-566-055-11	PIN, CONNECTOR 3P	
E23	*1-566-055-11	PIN, CONNECTOR 3P	

IC

IC1	8-759-145-58	IC UPC4558C
IC2	8-759-729-03	IC NJM2903D
IC3	8-759-145-58	IC UPC4558C
IC4	8-759-729-03	IC NJM2903D
IC5	8-759-729-03	IC NJM2903D
IC6	8-759-729-03	IC NJM2903D
IC7	8-759-145-58	IC UPC4558C
IC8	8-759-103-92	IC UPC318C

COIL

L1	1-459-148-00	COIL
L2	1-459-975-11	COIL, HORIZONTAL LINEARITY
L3	1-459-075-00	COIL, DYNAMIC CONVERSION CHOKE
L5	1-421-603-11	COIL, FERRITE CHOKE

Ref.No.	Part No.	Description	Remark
L6	1-407-365-00	COIL, CHOKE	
L7	1-459-110-00	COIL, DUST CORE	
L8	1-408-697-00	COIL, CHOKE	
		TRANSISTOR	
Q1	8-729-103-08	TRANSISTOR 2SC3209	
Q2	8-729-304-26	TRANSISTOR 2SC3263-O	
Q3	8-729-103-08	TRANSISTOR 2SC3209	
Q4	8-729-313-82	TRANSISTOR 2SD1138	
Q5	8-729-820-34	TRANSISTOR 2SC3995	
Q6	8-729-300-70	TRANSISTOR 2SD1137	
Q7	8-729-300-80	TRANSISTOR 2SB860	
Q8	8-729-119-76	TRANSISTOR 2SA1175-HFE	
Q9	8-729-697-92	TRANSISTOR 2SA979	
Q10	8-729-309-08	TRANSISTOR 2SC1890A	
Q11	8-729-300-70	TRANSISTOR 2SD1137	
Q12	8-729-309-08	TRANSISTOR 2SC1890A	
Q13	8-729-309-36	TRANSISTOR 2SA893A	
Q14	8-729-300-80	TRANSISTOR 2SB860	
Q15	8-729-201-04	TRANSISTOR 2SC2878	
Q16	8-729-800-32	TRANSISTOR 2SC2362K	
Q17	8-729-800-32	TRANSISTOR 2SC2362K	
Q18	8-729-309-08	TRANSISTOR 2SC1890A	
Q19	8-729-306-92	TRANSISTOR 2SD669A	
Q20	8-729-309-36	TRANSISTOR 2SA893A	
Q21	8-729-306-92	TRANSISTOR 2SD669A	
Q22	8-729-119-76	TRANSISTOR 2SA1175-HFE	
Q23	8-729-697-92	TRANSISTOR 2SA979	
Q24	8-729-901-72	TRANSISTOR 2SC3317	
Q25	8-729-306-92	TRANSISTOR 2SD669A	
Q26	8-729-309-08	TRANSISTOR 2SC1890A	
Q27	8-729-309-36	TRANSISTOR 2SA893A	
Q28	8-729-306-92	TRANSISTOR 2SD669A	
Q29	8-729-119-76	TRANSISTOR 2SA1175-HFE	
Q30	8-729-378-92	TRANSISTOR 2SD789-4	
Q31	8-729-301-56	TRANSISTOR 2SC3387-01AB	
Q32	8-729-374-02	TRANSISTOR 2SB740	
Q33	8-729-105-97	TRANSISTOR 2SA1156-2K	
Q34	8-729-103-08	TRANSISTOR 2SC3209	
Q35	8-729-119-78	TRANSISTOR 2SC2785-HFE	
Q36	8-729-119-76	TRANSISTOR 2SA1175-HFE	
Q37	8-729-201-04	TRANSISTOR 2SC2878	
Q38	8-729-119-78	TRANSISTOR 2SC2785-HFE	
Q39	8-729-119-76	TRANSISTOR 2SA1175-HFE	
Q40	8-729-119-78	TRANSISTOR 2SC2785-HFE	
Q41	8-729-133-53	TRANSISTOR 2SC2335	
Q42	8-729-119-78	TRANSISTOR 2SC2785-HFE	
Q43	8-729-119-78	TRANSISTOR 2SC2785-HFE	
Q44	8-729-304-92	TRANSISTOR 2SB649A	
Q45	8-729-306-92	TRANSISTOR 2SD669A	
Q46	8-729-300-70	TRANSISTOR 2SD1137	
Q47	8-729-300-80	TRANSISTOR 2SB860	
Q48	8-729-122-12	TRANSISTOR 2SA1221	
Q49	8-729-122-12	TRANSISTOR 2SA1221	

RESISTOR

Ref.No.	Part No.	Description				Remark
R1	1-215-461-00	METAL	47K	1%	1/6W	
R2	1-215-461-00	METAL	47K	1%	1/6W	
R3	1-249-441-11	CARBON	100K	5%	1/4W	
R4	1-249-413-11	CARBON	470	5%	1/4W	
R5	1-249-417-11	CARBON	1K	5%	1/4W	
R6	1-249-417-11	CARBON	1K	5%	1/4W	
R7	1-215-875-11	METAL OXIDE	10K	5%	1W	F
R8	1-215-876-00	METAL OXIDE	15K	5%	1W	F
R9	1-214-892-00	METAL	15K	1%	1/2W	
R10	1-214-892-00	METAL	15K	1%	1/2W	
R11	1-215-437-00	METAL	4.7K	1%	1/6W	
R12	1-249-401-11	CARBON	47	5%	1/4W	
R14	1-249-415-11	CARBON	680	5%	1/4W	
R15	1-215-915-11	METAL OXIDE	470	5%	3W	F
R16	1-215-871-11	METAL OXIDE	2.2K	5%	1W	F
R17	1-207-451-00	WIREWOUND	0.1	10%	1/2W	
R18	1-249-389-11	CARBON	4.7	5%	1/4W	F
R19	1-249-382-11	CARBON	1.2	5%	1/4W	F
R20	1-249-382-11	CARBON	1.2	5%	1/4W	F
R21	1-249-417-11	CARBON	1K	5%	1/4W	
R22	1-249-417-11	CARBON	1K	5%	1/4W	
R23	1-216-357-00	METAL OXIDE	4.7	5%	1W	F
R24	1-216-357-00	METAL OXIDE	4.7	5%	1W	F
R25	1-215-865-11	METAL OXIDE	220	5%	1W	F
R26	1-216-478-11	METAL OXIDE	390	5%	3W	F
R27	1-249-423-11	CARBON	3.3K	5%	1/4W	
R28	1-249-425-11	CARBON	4.7K	5%	1/4W	
R29	1-249-419-11	CARBON	1.5K	5%	1/4W	
R30	1-215-437-00	METAL	4.7K	1%	1/6W	
R31	1-215-445-00	METAL	10K	1%	1/6W	
R32	1-249-417-11	CARBON	1K	5%	1/4W	
R33	1-249-417-11	CARBON	1K	5%	1/4W	
R34	1-215-437-00	METAL	4.7K	1%	1/6W	
R35	1-249-406-11	CARBON	120	5%	1/4W	
R36	1-215-900-11	METAL OXIDE	22K	5%	2W	F
R37	1-249-405-11	CARBON	100	5%	1/4W	
R38	1-249-377-11	CARBON	0.47	5%	1/4W	F
R39	1-249-377-11	CARBON	0.47	5%	1/4W	F
R40	1-249-417-11	CARBON	1K	5%	1/4W	
R41	1-249-413-11	CARBON	470	5%	1/4W	
R42	1-216-349-00	METAL OXIDE	1	5%	1W	F
R43	1-215-859-00	METAL OXIDE	22	5%	1W	F
R44	1-215-870-11	METAL OXIDE	1.5K	5%	1W	F
R45	1-215-869-11	METAL OXIDE	1K	5%	1W	F
R46	1-216-454-11	METAL OXIDE	390	5%	2W	F
R47	1-215-869-11	METAL OXIDE	1K	5%	1W	F
R48	1-215-425-00	METAL	1.5K	1%	1/6W	
R49	1-216-349-00	METAL OXIDE	1	5%	1W	F
R50	1-215-437-00	METAL	4.7K	1%	1/6W	
R51	1-216-349-00	METAL OXIDE	1	5%	1W	F
R52	1-249-429-11	CARBON	10K	5%	1/4W	
R53	1-247-902-11	CARBON	910K	5%	1/4W	
R54	1-247-883-00	CARBON	150K	5%	1/4W	
R55	1-249-433-11	CARBON	22K	5%	1/4W	
R56	1-249-420-11	CARBON	1.8K	5%	1/4W	
R57	1-249-421-11	CARBON	2.2K	5%	1/4W	F
R58	1-249-429-11	CARBON	10K	5%	1/4W	
R59	1-249-425-11	CARBON	4.7K	5%	1/4W	
R60	1-249-417-11	CARBON	1K	5%	1/4W	
R61	1-249-418-11	CARBON	1.2K	5%	1/4W	
R62	1-215-863-11	METAL OXIDE	100	5%	1W	F
R63	1-215-421-00	METAL	1K	1%	1/6W	
R64	1-215-445-00	METAL	10K	1%	1/6W	
R65	1-249-420-11	CARBON	1.8K	5%	1/4W	
R66	1-215-878-00	METAL OXIDE	33K	5%	1W	F
R67	1-249-401-11	CARBON	47	5%	1/4W	
R68	1-249-425-11	CARBON	4.7K	5%	1/4W	
R69	1-215-461-00	METAL	47K	1%	1/6W	
R70	1-215-453-00	METAL	22K	1%	1/6W	
R71	1-215-429-00	METAL	2.2K	1%	1/6W	
R72	1-247-688-11	CARBON	10	5%	1/4W	F
R73	1-247-688-11	CARBON	10	5%	1/4W	F

E

- The components identified by ⊠ in this manual have been carefully factory-selected for each set in order to satisfy regulations regarding X-ray radiation. Should replacement be required, replace only with the value originally used.

The components identified by shading and mark ⚠ are critical for safety.
Replace only with part number specified.

Ref.No.	Part No.	Description				Remark
R74	1-247-688-11	CARBON	10	5%	1/4W	F
R75	1-249-423-11	CARBON	3.3K	5%	1/4W	
R76	1-249-425-11	CARBON	4.7K	5%	1/4W	
R77	1-249-417-11	CARBON	1K	5%	1/4W	
R78	1-215-437-00	METAL	4.7K	1%	1/6W	
R79	1-215-437-00	METAL	4.7K	1%	1/6W	
R80	1-249-417-11	CARBON	1K	5%	1/4W	
R81	1-249-417-11	CARBON	1K	5%	1/4W	
R82	1-249-405-11	CARBON	100	5%	1/4W	
R83	1-249-421-11	CARBON	2.2K	5%	1/4W	
R84	1-249-426-11	CARBON	5.6K	5%	1/4W	
R85	1-249-452-11	CARBON	2.7	5%	1/4W	F
R86	1-249-452-11	CARBON	2.7	5%	1/4W	F
R87	1-215-863-11	METAL OXIDE	100	5%	1W	F
R88	1-216-349-00	METAL OXIDE	1	5%	1W	F
R89	1-216-353-00	METAL OXIDE	2.2	5%	1W	F
R90	1-216-353-00	METAL OXIDE	2.2	5%	1W	F
R91	1-247-881-00	CARBON	120K	5%	1/4W	
R92	1-249-425-11	CARBON	4.7K	5%	1/4W	
R93	1-249-417-11	CARBON	1K	5%	1/4W	
R94	1-249-421-11	CARBON	2.2K	5%	1/4W	
R95	1-249-429-11	CARBON	10K	5%	1/4W	
R96	1-249-417-11	CARBON	1K	5%	1/4W	
R97	1-249-421-11	CARBON	2.2K	5%	1/4W	
R98	1-249-421-11	CARBON	2.2K	5%	1/4W	
R99	1-249-421-11	CARBON	2.2K	5%	1/4W	
R100	1-249-400-11	CARBON	39	5%	1/4W	
R101	1-249-417-11	CARBON	1K	5%	1/4W	
R102	1-215-857-11	METAL OXIDE	10	5%	1W	F
R103	1-249-421-11	CARBON	2.2K	5%	1/4W	
R104	1-216-350-11	METAL OXIDE	1.2	5%	1W	F
R105	1-215-860-11	METAL OXIDE	33	5%	1W	F
R106	1-215-863-11	METAL OXIDE	100	5%	1W	F
R107	1-215-863-11	METAL OXIDE	100	5%	1W	F
R108	1-216-345-11	METAL OXIDE	0.47	5%	1W	F
R109	1-215-869-11	METAL OXIDE	1K	5%	1W	F
R110	1-215-879-91	METAL OXIDE	47K	5%	1W	F
R111	1-216-461-00	METAL OXIDE	5.6K	5%	2W	F
R112	1-249-405-11	CARBON	100	5%	1/4W	
R113	1-249-429-11	CARBON	10K	5%	1/4W	
⊠R114 ⚠		METAL			1/6W	
⊠R115 ⚠		METAL			1/6W	
R116	1-215-445-00	METAL	10K	1%	1/6W	
R117	1-249-421-11	CARBON	2.2K	5%	1/4W	
R118	1-249-429-11	CARBON	10K	5%	1/4W	
R119	1-247-883-00	CARBON	150K	5%	1/4W	
R120	1-249-417-11	CARBON	1K	5%	1/4W	
R121	1-249-425-11	CARBON	4.7K	5%	1/4W	
R122	1-249-421-11	CARBON	2.2K	5%	1/4W	
R123	1-249-433-11	CARBON	22K	5%	1/4W	
R124	1-249-421-11	CARBON	2.2K	5%	1/4W	
R125	1-249-441-11	CARBON	100K	5%	1/4W	
R126	1-249-425-11	CARBON	4.7K	5%	1/4W	
R127	1-249-425-11	CARBON	4.7K	5%	1/4W	
R128	1-249-429-11	CARBON	10K	5%	1/4W	
R129	1-215-875-11	METAL OXIDE	10K	5%	1W	F
R130	1-215-875-11	METAL OXIDE	10K	5%	1W	F
R131	1-215-875-11	METAL OXIDE	10K	5%	1W	F
R132	1-215-875-11	METAL OXIDE	10K	5%	1W	F
R133	1-249-417-11	CARBON	1K	5%	1/4W	
R134 ⚠	1-215-433-91	METAL	3.3K	1%	1/6W	
R135 ⚠	1-215-433-91	METAL	3.3K	1%	1/6W	
R136 ⚠	1-215-433-91	METAL	3.3K	1%	1/6W	
R137	1-215-461-00	METAL	47K	1%	1/6W	
R138	1-249-417-11	CARBON	1K	5%	1/4W	
R139	1-249-417-11	CARBON	1K	5%	1/4W	
⊠R140 ⚠		METAL			1/6W	
⊠R141 ⚠		METAL			1/6W	
R142	1-247-887-00	CARBON	220K	5%	1/4W	
R143	1-247-887-00	CARBON	220K	5%	1/4W	
R144	1-215-445-00	METAL	10K	1%	1/6W	
R145	1-249-441-11	CARBON	100K	5%	1/4W	
R146	1-249-417-11	CARBON	1K	5%	1/4W	
R147	1-249-439-11	CARBON	68K	5%	1/4W	
R148	1-249-437-11	CARBON	47K	5%	1/4W	
R149	1-249-426-11	CARBON	5.6K	5%	1/4W	
R150	1-249-421-11	CARBON	2.2K	5%	1/4W	
R151	1-249-435-11	CARBON	33K	5%	1/4W	
R152	1-249-417-11	CARBON	1K	5%	1/4W	
R153	1-247-895-00	CARBON	470K	5%	1/4W	
R154	1-249-429-11	CARBON	10K	5%	1/4W	
R155	1-215-477-00	METAL	220K	1%	1/6W	
R156	1-215-485-00	METAL	470K	1%	1/6W	
R157	1-249-437-11	CARBON	47K	5%	1/4W	
R158	1-249-425-11	CARBON	4.7K	5%	1/4W	
R159	1-216-354-11	METAL OXIDE	2.7	5%	1W	F
R160	1-249-397-11	CARBON	22	5%	1/4W	
R161	1-249-425-11	CARBON	4.7K	5%	1/4W	
R162	1-249-429-11	CARBON	10K	5%	1/4W	
R163	1-249-429-11	CARBON	10K	5%	1/4W	
R164	1-249-429-11	CARBON	10K	5%	1/4W	
R165	1-249-405-11	CARBON	100	5%	1/4W	
R166	1-249-429-11	CARBON	10K	5%	1/4W	
R167	1-249-417-11	CARBON	1K	5%	1/4W	
R168	1-249-425-11	CARBON	4.7K	5%	1/4W	
R170	1-249-417-11	CARBON	1K	5%	1/4W	
R171	1-249-429-11	CARBON	10K	5%	1/4W	
R172	1-249-405-11	CARBON	100	5%	1/4W	
R173	1-249-429-11	CARBON	10K	5%	1/4W	
R174	1-215-859-00	METAL OXIDE	22	5%	1W	F
R175	1-215-421-00	METAL	1K	1%	1/6W	
R176	1-215-421-00	METAL	1K	1%	1/6W	
R180	1-249-417-11	CARBON	1K	5%	1/4W	
R182 ⚠	1-215-433-91	METAL	3.3K	1%	1/6W	
⊠R183 ⚠		METAL			1/6W	
R184	1-215-453-00	METAL	22K	1%	1/6W	
R185	1-249-405-11	CARBON	100	5%	1/4W	
R190	1-215-445-00	METAL	10K	1%	1/6W	
R191	1-215-421-00	METAL	1K	1%	1/6W	
R192	1-215-445-00	METAL	10K	1%	1/6W	
R193	1-215-445-00	METAL	10K	1%	1/6W	
R194	1-215-459-00	METAL	39K	1%	1/6W	
R195	1-215-445-00	METAL	10K	1%	1/6W	
R196	1-249-417-11	CARBON	1K	5%	1/4W	
R197	1-215-445-00	METAL	10K	1%	1/6W	
R198	1-215-457-00	METAL	33K	1%	1/6W	
R199	1-249-425-11	CARBON	4.7K	5%	1/4W	
R200	1-249-405-11	CARBON	100	5%	1/4W	
R201	1-249-429-11	CARBON	10K	5%	1/4W	
R202	1-216-369-00	METAL OXIDE	1	5%	2W	F
R203	1-216-393-00	METAL OXIDE	2.2	5%	3W	F
R204	1-249-429-11	CARBON	10K	5%	1/4W	
R205	1-249-401-11	CARBON	47	5%	1/4W	
R206	1-249-401-11	CARBON	47	5%	1/4W	
R207	1-215-429-00	METAL	2.2K	1%	1/6W	
R208	1-215-421-00	METAL	1K	1%	1/6W	
R209	1-215-421-00	METAL	1K	1%	1/6W	
R210	1-249-432-11	CARBON	18K	5%	1/4W	
R211	1-215-443-00	METAL	8.2K	1%	1/6W	
R212	1-249-414-11	CARBON	560	5%	1/4W	F

Ref.No.	Part No.	Description				Remark
R213	1-249-428-11	CARBON	8.2K	5%	1/4W	
R214	1-249-410-11	CARBON	270	5%	1/4W	
R215	1-249-415-11	CARBON	680	5%	1/4W	F
R216	1-249-400-11	CARBON	39	5%	1/4W	F
R217	1-249-403-11	CARBON	68	5%	1/4W	F
R218	1-216-349-00	METAL OXIDE	1	5%	1W	F
R219	1-216-349-00	METAL OXIDE	1	5%	1W	F
R220	1-216-451-11	METAL OXIDE	120	5%	2W	F
R221	1-216-349-00	METAL OXIDE	1	5%	1W	F
R222	1-249-417-11	CARBON	1K	5%	1/4W	
R223	1-215-421-00	METAL	1K	1%	1/6W	
R224	1-215-461-00	METAL	47K	1%	1/6W	
R225	1-215-461-00	METAL	47K	1%	1/6W	
R226	1-249-441-11	CARBON	100K	5%	1/4W	
R227	1-249-429-11	CARBON	10K	5%	1/4W	
R228	1-249-429-11	CARBON	10K	5%	1/4W	
R229	1-249-437-11	CARBON	47K	5%	1/4W	
R230	1-249-437-11	CARBON	47K	5%	1/4W	
R231	1-216-389-11	METAL OXIDE	1	5%	3W	F
R233	1-249-417-11	CARBON	1K	5%	1/4W	
R234	1-216-389-11	METAL OXIDE	1	5%	3W	F
R235	1-249-437-11	CARBON	47K	5%	1/4W	
R236	1-249-437-11	CARBON	47K	5%	1/4W	
R237	1-249-429-11	CARBON	10K	5%	1/4W	
R238	1-249-441-11	CARBON	100K	5%	1/4W	
R239	1-249-429-11	CARBON	10K	5%	1/4W	
R240	1-215-421-00	METAL	1K	1%	1/6W	
R241	1-215-461-00	METAL	47K	1%	1/6W	
R242	1-215-461-00	METAL	47K	1%	1/6W	
R245	1-215-915-11	METAL OXIDE	470	5%	3W	F
R250	1-249-429-11	CARBON	10K	5%	1/4W	
R251	1-249-429-11	CARBON	10K	5%	1/4W	

VARIABLE RESISTOR

RV2	1-237-516-21	RES, ADJ, CERMET 2K
RV3	1-237-518-21	RES, ADJ, CERMET 10K

RELAY

RY1	1-515-627-11	RELAY

SPARK GAP

SG1	1-519-063-99	DISCHARGING GAP
SG2	1-519-063-99	DISCHARGING GAP

TRANSFORMER

T1	1-437-144-11	TRANSFORMER, FERRITE (HDT)
T2	1-424-123-11	TRANSFORMER, HORIZONTAL OUTPUT
T3	1-421-602-11	TRANSFORMER, FERRITE (VPCT)
T4	1-407-849-00	TRANSFORMER, D.F
T5	1-437-133-11	TRANSFORMER, FERRITE (HDT)
T6	1-439-380-11	LOT
T7	1-424-124-11	TRANSFORMER, PIN MODULATION

****

*A-1345-836-A D BOARD, COMPLETE
****

CAPACITOR

C1	1-102-978-00	CERAMIC	220PF	5%	50V
C2	1-102-973-00	CERAMIC	100PF	5%	50V
C3	1-130-871-11	FILM	0.01MF	5%	50V
C4	1-136-161-00	FILM	0.047MF	5%	50V
C5	1-124-589-11	ELECT	47MF	20%	16V
C6	1-130-471-00	FILM	0.001MF	5%	50V
C7	1-124-589-11	ELECT	47MF	20%	16V
C8	1-124-589-11	ELECT	47MF	20%	16V
C9	1-126-094-11	ELECT	4.7MF	20%	25V
C10	1-136-153-00	FILM	0.01MF	5%	50V
C11	1-136-153-00	FILM	0.01MF	5%	50V
C12	1-126-157-11	ELECT	10MF	20%	16V
C13	1-136-157-00	FILM	0.022MF	5%	50V
C14	1-124-257-00	ELECT	2.2MF	20%	50V
C15	1-130-020-91	FILM	0.0015MF	5%	50V
C16	1-136-173-00	FILM	0.47MF	5%	50V
C17	1-126-157-11	ELECT	10MF	20%	16V
C18	1-136-157-00	FILM	0.022MF	5%	50V
C19	1-124-589-11	ELECT	47MF	20%	16V
C20	1-124-589-11	ELECT	47MF	20%	16V
C21	1-124-589-11	ELECT	47MF	20%	16V
C22	1-124-589-11	ELECT	47MF	20%	16V
C23	1-101-004-00	CERAMIC	0.01MF		50V
C24	1-130-871-11	FILM	0.01MF	5%	50V
C25	1-124-589-11	ELECT	47MF	20%	16V
C29	1-136-474-11	FILM	0.1MF	5%	100V
C30	1-130-871-11	FILM	0.01MF	5%	50V
C31	1-130-871-11	FILM	0.01MF	5%	50V
C33	1-124-589-11	ELECT	47MF	20%	16V
C34	1-124-589-11	ELECT	47MF	20%	16V
C35	1-101-004-00	CERAMIC	0.01MF		50V
C41	1-136-153-00	FILM	0.01MF	5%	50V
C43	1-136-161-00	FILM	0.047MF	5%	50V
C44	1-101-004-00	CERAMIC	0.01MF		50V
C45	1-102-973-00	CERAMIC	100PF	5%	50V
C46	1-102-973-00	CERAMIC	100PF	5%	50V
C47	1-101-004-00	CERAMIC	0.01MF		50V
C48	1-130-471-00	MYLAR	0.001MF	5%	50V
C49	1-124-438-00	ELECT	1MF	20%	50V
C50	1-102-973-00	CERAMIC	100PF	5%	50V
C51	1-130-471-00	MYLAR	0.001MF	5%	50V
C52	1-124-589-11	ELECT	47MF	20%	16V
C53	1-102-824-00	CERAMIC	470PF	5%	50V
C54	1-102-114-00	CERAMIC	470PF	10%	50V
C55	1-124-438-00	ELECT	1MF	20%	50V
C56	1-124-438-00	ELECT	1MF	20%	50V
C57	1-102-973-00	CERAMIC	100PF	5%	50V
C58	1-102-973-00	CERAMIC	100PF	5%	50V
C60	1-124-589-11	ELECT	47MF	20%	16V
C62	1-126-157-11	ELECT	10MF	20%	16V
C63	1-130-871-11	FILM	0.01MF	5%	50V
C64	1-101-361-00	CERAMIC	150PF	5%	50V
C65	1-101-004-00	CERAMIC	0.01MF		50V
C67	1-136-153-00	FILM	0.01MF	5%	50V
C68	1-102-973-00	CERAMIC	100PF	5%	50V
C69	1-102-973-00	CERAMIC	100PF	5%	50V
C70	1-130-471-00	MYLAR	0.001MF	5%	50V
C71	1-136-153-00	FILM	0.01MF	5%	50V
C72	1-102-973-00	CERAMIC	100PF	5%	50V
C73	1-130-475-00	MYLAR	0.0022MF	5%	50V
C74	1-136-153-00	FILM	0.01MF	5%	50V
C75	1-102-978-00	CERAMIC	220PF	5%	50V
C76	1-101-361-00	CERAMIC	150PF	5%	50V
C77	1-124-589-11	ELECT	47MF	20%	16V
C78	1-136-161-00	FILM	0.047MF	5%	50V
C79	1-136-165-00	FILM	0.1MF	5%	50V

D

Ref.No.	Part No.	Description			Remark
C80	1-124-589-11	ELECT	47MF	20%	16V
C81	1-136-153-00	FILM	0.01MF	5%	50V
C82	1-136-157-00	FILM	0.022MF	5%	50V
C83	1-136-165-00	FILM	0.1MF	5%	50V
C84	1-136-153-00	FILM	0.01MF	5%	50V
C85	1-136-161-00	FILM	0.047MF	5%	50V
C86	1-136-157-00	FILM	0.022MF	5%	50V
C87	1-136-165-00	FILM	0.1MF	5%	50V
C88	1-124-589-11	ELECT	47MF	20%	16V
C89	1-136-153-00	FILM	0.01MF	5%	50V
C90	1-136-161-00	FILM	0.047MF	5%	50V
C91	1-124-589-11	ELECT	47MF	20%	16V
C92	1-124-589-11	ELECT	47MF	20%	16V
C100	1-126-157-11	ELECT	10MF	20%	16V
C101	1-130-473-00	MYLAR	0.0015MF	5%	50V
C103	1-124-589-11	ELECT	47MF	20%	16V
C104	1-102-074-00	CERAMIC	0.001MF	10%	50V
C105	1-136-161-00	FILM	0.047MF	5%	50V
C106	1-102-978-00	CERAMIC	220PF	5%	50V
C107	1-136-161-00	FILM	0.047MF	5%	50V
C108	1-136-161-00	FILM	0.047MF	5%	50V
C109	1-102-820-00	CERAMIC	330PF	5%	50V
C110	1-136-161-00	FILM	0.047MF	5%	50V
C111	1-130-473-00	MYLAR	0.0015MF	5%	50V
C112	1-101-880-00	CERAMIC	47PF	5%	50V
C113	1-102-074-00	CERAMIC	0.001MF	10%	50V
C114	1-136-161-00	FILM	0.047MF	5%	50V
C115	1-102-978-00	CERAMIC	220PF	5%	50V
C116	1-136-161-00	FILM	0.047MF	5%	50V
C117	1-136-161-00	FILM	0.047MF	5%	50V
C118	1-102-820-00	CERAMIC	330PF	5%	50V
C119	1-136-161-00	FILM	0.047MF	5%	50V
C120	1-130-473-00	MYLAR	0.0015MF	5%	50V
C121	1-101-880-00	CERAMIC	47PF	5%	50V
C122	1-124-589-11	ELECT	47MF	20%	16V
C123	1-124-589-11	ELECT	47MF	20%	16V
C124	1-101-004-00	CERAMIC	0.01MF		50V
C125	1-101-004-00	CERAMIC	0.01MF		50V
C134	1-102-074-00	CERAMIC	0.001MF	10%	50V
C135	1-136-161-00	FILM	0.047MF	5%	50V
C136	1-102-978-00	CERAMIC	220PF	5%	50V
C138	1-136-161-00	FILM	0.047MF	5%	50V
C139	1-136-161-00	FILM	0.047MF	5%	50V
C140	1-102-824-00	CERAMIC	470PF	5%	50V
C141	1-136-161-00	FILM	0.047MF	5%	50V
C142	1-102-973-00	CERAMIC	100PF	5%	50V
C143	1-130-473-00	MYLAR	0.0015MF	5%	50V
C145	1-101-880-00	CERAMIC	47PF	5%	50V
C146	1-102-074-00	CERAMIC	0.001MF	10%	50V
C147	1-124-589-11	ELECT	47MF	20%	16V
C148	1-102-978-00	CERAMIC	220PF	5%	50V
C149	1-102-074-00	CERAMIC	0.001MF	10%	50V
C150	1-124-589-11	ELECT	47MF	20%	16V
C151	1-124-589-11	ELECT	47MF	20%	16V
C152	1-124-589-11	ELECT	47MF	20%	16V
C153	1-136-161-00	FILM	0.047MF	5%	50V
C154	1-136-161-00	FILM	0.047MF	5%	50V
C155	1-102-824-00	CERAMIC	470PF	5%	50V
C156	1-136-161-00	FILM	0.047MF	5%	50V
C157	1-130-473-00	MYLAR	0.0015MF	5%	50V
C158	1-101-880-00	CERAMIC	47PF	5%	50V
C159	1-126-157-11	ELECT	10MF	20%	16V
C160	1-126-157-11	ELECT	10MF	20%	16V
C161	1-136-161-00	FILM	0.047MF	5%	50V
C165	1-136-165-00	FILM	0.1MF	5%	50V
C167	1-124-589-11	ELECT	47MF	20%	16V
C180	1-124-589-11	ELECT	47MF	20%	16V
C181	1-124-589-11	ELECT	47MF	20%	16V
C201	1-102-824-00	CERAMIC	470PF	5%	50V
C202	1-101-001-00	CERAMIC	0.001MF		50V
C203	1-101-001-00	CERAMIC	0.001MF		50V
C204	1-101-001-00	CERAMIC	0.001MF		50V
C205	1-101-001-00	CERAMIC	0.001MF		50V
C206	1-101-001-00	CERAMIC	0.001MF		50V
C207	1-102-978-00	CERAMIC	220PF	5%	50V
C210	1-101-001-00	CERAMIC	0.001MF		50V
C211	1-101-001-00	CERAMIC	0.001MF		50V
C212	1-130-471-00	FILM	0.001MF	5%	50V
C213	1-162-318-11	CERAMIC	0.001MF	10%	500V
C214	1-162-318-11	CERAMIC	0.001MF	10%	500V
C215	1-136-157-00	FILM	0.022MF	5%	50V
C216	1-136-153-00	FILM	0.01MF	5%	50V
C217	1-102-973-00	CERAMIC	100PF	5%	50V
C218	1-130-871-11	FILM	0.01MF	5%	50V
C219	1-136-161-00	FILM	0.047MF	5%	50V
C220	1-124-589-11	ELECT	47MF	20%	16V
C221	1-130-471-00	MYLAR	0.001MF	5%	50V
C222	1-102-973-00	CERAMIC	100PF	5%	50V
C223	1-136-153-00	FILM	0.01MF	5%	50V
C224	1-136-153-00	FILM	0.01MF	5%	50V
C225	1-101-004-00	CERAMIC	0.01MF		50V
C226	1-102-973-00	CERAMIC	100PF	5%	50V
C227	1-101-004-00	CERAMIC	0.01MF		50V
C230	1-101-004-00	CERAMIC	0.01MF		50V
C231	1-101-004-00	CERAMIC	0.01MF		50V
C232	1-101-004-00	CERAMIC	0.01MF		50V
C233	1-102-978-00	CERAMIC	220PF	5%	50V
C235	1-101-004-00	CERAMIC	0.01MF		50V
C236	1-101-004-00	CERAMIC	0.01MF		50V
C237	1-101-004-00	CERAMIC	0.01MF		50V

CONNECTOR

D2	*1-566-054-11	PIN, CONNECTOR 2P
D3	*1-566-056-11	PIN, CONNECTOR 4P
D4	*1-566-062-11	PIN, CONNECTOR 10P
D5	*1-566-056-11	PIN, CONNECTOR 4P
D6	*1-566-055-11	PIN, CONNECTOR 3P
D7	*1-566-054-11	PIN, CONNECTOR 2P
D9	*1-566-055-11	PIN, CONNECTOR 3P
D11	*1-566-058-11	PIN, CONNECTOR 6P
D12	*1-566-054-11	PIN, CONNECTOR 2P
D13	*1-566-058-11	PIN, CONNECTOR 6P
D15	*1-566-056-11	PIN, CONNECTOR 4P
D16	*1-566-055-11	PIN, CONNECTOR 3P
D17	*1-566-056-11	PIN, CONNECTOR 4P
D18	*1-566-056-11	PIN, CONNECTOR 4P

DIODE

D1	8-719-110-41	DIODE RD15ES-B2
D2	8-719-110-41	DIODE RD15ES-B2
D3	8-719-110-03	DIODE RD7.5ES-B2
D4	8-719-110-03	DIODE RD7.5ES-B2
D5	8-719-110-03	DIODE RD7.5ES-B2
D6	8-719-911-19	DIODE 1SS119
D7	8-719-911-19	DIODE 1SS119
D8	8-719-110-03	DIODE RD7.5ES-B2
D9	8-719-110-03	DIODE RD7.5ES-B2
D13	8-719-911-19	DIODE 1SS119

Ref.No.	Part No.	Description	Remark
D14	8-719-911-19	DIODE 1SS119	
D15	8-719-911-19	DIODE 1SS119	
D16	8-719-110-03	DIODE RD7.5ES-B2	
D17	8-719-911-19	DIODE 1SS119	
D18	8-719-911-19	DIODE 1SS119	
D19	8-719-109-81	DIODE RD4.7ES-B2	
D20	8-719-110-03	DIODE RD7.5ES-B2	
D21	8-719-110-03	DIODE RD7.5ES-B2	
D22	8-719-911-19	DIODE 1SS119	
D23	8-719-911-19	DIODE 1SS119	
D24	8-719-911-19	DIODE 1SS119	
D25	8-719-911-19	DIODE 1SS119	
D26	8-719-911-19	DIODE 1SS119	
D27	8-719-911-19	DIODE 1SS119	
D28	8-719-911-19	DIODE 1SS119	
D29	8-719-911-19	DIODE 1SS119	
D30	8-719-911-19	DIODE 1SS119	
D31	8-719-911-19	DIODE 1SS119	
D32	8-719-911-19	DIODE 1SS119	
D33	8-719-911-19	DIODE 1SS119	
D34	8-719-911-19	DIODE 1SS119	
D35	8-719-110-36	DIODE RD13ES-B2	
D36	8-719-911-19	DIODE 1SS119	
D37	8-719-911-19	DIODE 1SS119	
D38	8-719-911-19	DIODE 1SS119	

IC

IC1	8-759-131-11	IC UPC311C	
IC2	8-759-100-60	IC UPC1377C	
IC3	8-759-202-26	IC TC74HC138P	
IC4	8-759-645-19	IC M54519P	
IC5	8-759-208-14	IC TC4066BPHB	
IC6	8-759-240-53	IC TC4053BP	
IC7	8-759-145-58	IC UPC4558C	
IC8	8-759-145-58	IC UPC4558C	
IC9	8-759-145-58	IC UPC4558C	
IC10	8-759-145-58	IC UPC4558C	
IC11	8-759-145-58	IC UPC4558C	
IC12	8-759-131-11	IC UPC311C	
IC13	8-759-131-11	IC UPC311C	
IC14	8-759-007-40	IC TL082CP	
IC15	8-759-145-58	IC UPC4558C	
IC16	8-759-014-96	IC MC1496P	
IC17	8-759-202-74	IC TC74HC04P	
IC18	8-759-729-03	IC NJM2903D	
IC19	8-759-145-58	IC UPC4558C	
IC20	8-759-145-58	IC UPC4558C	
IC21	8-759-145-58	IC UPC4558C	
IC22	8-759-145-58	IC UPC4558C	
IC23	8-759-240-53	IC TC4053BP	
IC24	8-759-240-53	IC TC4053BP	
IC25	8-759-145-58	IC UPC4558C	
IC26	8-759-145-58	IC UPC4558C	
IC27	8-759-145-58	IC UPC4558C	
IC28	8-759-208-06	IC TC4051BPHB	
IC29	8-759-208-06	IC TC4051BPHB	
IC30	8-759-131-11	IC UPC311C	
IC31	8-759-131-11	IC UPC311C	
IC32	8-759-007-40	IC TL082CP	

COIL

L1	1-408-239-00	INDUCTOR 4.7MMH	
L3	1-408-237-00	INDUCTOR 3.3MMH	
L4	1-408-237-00	INDUCTOR 3.3MMH	
L5	1-408-237-00	INDUCTOR 3.3MMH	
L6	1-408-237-00	INDUCTOR 3.3MMH	
L7	1-408-240-00	INDUCTOR 6.8MMH	

TRANSISTOR

Q1	8-729-178-55	TRANSISTOR 2SC2785-E	
Q2	8-729-178-55	TRANSISTOR 2SC2785-E	
Q3	8-729-178-55	TRANSISTOR 2SC2785-E	
Q4	8-729-178-55	TRANSISTOR 2SC2785-E	
Q5	8-729-900-36	TRANSISTOR DTC124ES	
Q6	8-729-178-55	TRANSISTOR 2SC2785-E	
Q7	8-729-119-76	TRANSISTOR 2SA1175-HFE	
Q8	8-729-900-36	TRANSISTOR DTC124ES	
Q9	8-729-900-36	TRANSISTOR DTC124ES	
Q10	8-729-201-04	TRANSISTOR 2SC2878	
Q11	8-729-201-04	TRANSISTOR 2SC2878	
Q12	8-729-201-04	TRANSISTOR 2SC2878	
Q13	8-729-201-04	TRANSISTOR 2SC2878	
Q14	8-729-201-04	TRANSISTOR 2SC2878	
Q16	8-729-900-36	TRANSISTOR DTC124ES	
Q18	8-729-201-04	TRANSISTOR 2SC2878	
Q19	8-729-178-55	TRANSISTOR 2SC2785-E	
Q20	8-729-178-55	TRANSISTOR 2SC2785-E	
Q21	8-729-178-55	TRANSISTOR 2SC2785-E	
Q22	8-729-201-04	TRANSISTOR 2SC2878	
Q23	8-729-201-04	TRANSISTOR 2SC2878	
Q24	8-729-201-04	TRANSISTOR 2SC2878	
Q25	8-729-178-55	TRANSISTOR 2SC2785-E	
Q26	8-729-178-55	TRANSISTOR 2SC2785-E	
Q27	8-729-178-55	TRANSISTOR 2SC2785-E	
Q28	8-729-178-55	TRANSISTOR 2SC2785-E	
Q29	8-729-178-55	TRANSISTOR 2SC2785-E	
Q30	8-729-178-55	TRANSISTOR 2SC2785-E	
Q31	8-729-178-55	TRANSISTOR 2SC2785-E	
Q32	8-729-178-55	TRANSISTOR 2SC2785-E	
Q33	8-729-178-55	TRANSISTOR 2SC2785-E	
Q34	8-729-178-55	TRANSISTOR 2SC2785-E	
Q35	8-729-900-36	TRANSISTOR DTC124ES	
Q36	8-729-178-55	TRANSISTOR 2SC2785-E	
Q37	8-729-178-55	TRANSISTOR 2SC2785-E	
Q38	8-729-105-73	TRANSISTOR 2SK523-L2	
Q39	8-729-900-36	TRANSISTOR DTC124ES	
Q40	8-729-178-55	TRANSISTOR 2SC2785-E	
Q41	8-729-105-73	TRANSISTOR 2SK523-L2	
Q42	8-729-900-36	TRANSISTOR DTC124ES	
Q43	8-729-178-55	TRANSISTOR 2SC2785-E	
Q44	8-729-201-04	TRANSISTOR 2SC2878	
Q45	8-729-201-04	TRANSISTOR 2SC2878	
Q49	8-729-201-04	TRANSISTOR 2SC2878	
Q50	8-729-201-04	TRANSISTOR 2SC2878	
Q51	8-729-201-04	TRANSISTOR 2SC2878	
Q52	8-729-178-55	TRANSISTOR 2SC2785-E	
Q53	8-729-178-55	TRANSISTOR 2SC2785-E	
Q54	8-729-105-73	TRANSISTOR 2SK523-L2	
Q55	8-729-201-04	TRANSISTOR 2SC2878	
Q56	8-729-178-55	TRANSISTOR 2SC2785-E	
Q57	8-729-178-55	TRANSISTOR 2SC2785-E	
Q58	8-729-105-73	TRANSISTOR 2SK523-L2	
Q59	8-729-178-55	TRANSISTOR 2SC2785-E	
Q60	8-729-119-76	TRANSISTOR 2SA1175-HFE	
Q61	8-729-201-04	TRANSISTOR 2SC2878	
Q62	8-729-201-04	TRANSISTOR 2SC2878	
Q63	8-729-178-55	TRANSISTOR 2SC2785-E	

D

Ref.No.	Part No.	Description	Remark
Q64	8-729-119-76	TRANSISTOR 2SA1175-HFE	
Q65	8-729-178-55	TRANSISTOR 2SC2785-E	
Q66	8-729-178-55	TRANSISTOR 2SC2785-E	
Q68	8-729-178-55	TRANSISTOR 2SC2785-E	
Q69	8-729-201-04	TRANSISTOR 2SC2878	
Q70	8-729-178-55	TRANSISTOR 2SC2785-E	
Q71	8-729-178-55	TRANSISTOR 2SC2785-E	
Q72	8-729-105-73	TRANSISTOR 2SK523-L2	
Q73	8-729-201-04	TRANSISTOR 2SC2878	
Q74	8-729-178-55	TRANSISTOR 2SC2785-E	
Q75	8-729-178-55	TRANSISTOR 2SC2785-E	
Q76	8-729-105-73	TRANSISTOR 2SK523-L2	
Q77	8-729-900-36	TRANSISTOR DTC124ES	
Q78	8-729-900-36	TRANSISTOR DTC124ES	
Q79	8-729-201-04	TRANSISTOR 2SC2878	
Q80	8-729-201-04	TRANSISTOR 2SC2878	
Q81	8-729-178-55	TRANSISTOR 2SC2785-E	
Q82	8-729-178-55	TRANSISTOR 2SC2785-E	
Q102	8-729-900-36	TRANSISTOR DTC124ES	
Q103	8-729-900-36	TRANSISTOR DTC124ES	
Q105	8-729-900-36	TRANSISTOR DTC124ES	
Q106	8-729-900-63	TRANSISTOR DTA124ES	
Q107	8-729-900-63	TRANSISTOR DTA124ES	
Q108	8-729-900-63	TRANSISTOR DTA124ES	
Q109	8-729-178-55	TRANSISTOR 2SC2785-E	
Q110	8-729-119-76	TRANSISTOR 2SA1175-HFE	
Q111	8-729-900-36	TRANSISTOR DTC124ES	
Q112	8-729-900-36	TRANSISTOR DTC124ES	
Q113	8-729-900-36	TRANSISTOR DTC124ES	
Q114	8-729-178-55	TRANSISTOR 2SC2785-E	
Q115	8-729-178-55	TRANSISTOR 2SC2785-E	
Q116	8-729-900-36	TRANSISTOR DTC124ES	
Q117	8-729-178-55	TRANSISTOR 2SC2785-E	
Q118	8-729-119-76	TRANSISTOR 2SA1175-HFE	
Q119	8-729-178-55	TRANSISTOR 2SC2785-E	
Q120	8-729-119-76	TRANSISTOR 2SA1175-HFE	
Q121	8-729-178-55	TRANSISTOR 2SC2785-E	
Q122	8-729-119-76	TRANSISTOR 2SA1175-HFE	

RESISTOR

R1	1-249-425-11	CARBON	4.7K	5%	1/4W
R2	1-249-431-11	CARBON	15K	5%	1/4W
R3	1-249-417-11	CARBON	1K	5%	1/4W
R4	1-249-425-11	CARBON	4.7K	5%	1/4W
R5	1-249-431-11	CARBON	15K	5%	1/4W
R6	1-215-421-00	METAL	1K	1%	1/6W
R7	1-215-437-00	METAL	4.7K	1%	1/6W
R8	1-215-437-00	METAL	4.7K	1%	1/6W
R10	1-249-417-11	CARBON	1K	5%	1/4W
R12	1-247-895-00	CARBON	470K	5%	1/4W
R13	1-249-417-11	CARBON	1K	5%	1/4W
R14	1-215-449-00	METAL	15K	1%	1/6W
R15	1-249-429-11	CARBON	10K	5%	1/4W
R16	1-249-417-11	CARBON	1K	5%	1/4W
R17	1-249-426-11	CARBON	5.6K	5%	1/4W
R18	1-249-417-11	CARBON	1K	5%	1/4W
R19	1-249-429-11	CARBON	10K	5%	1/4W
R20	1-249-430-11	CARBON	12K	5%	1/4W
R21	1-249-430-11	CARBON	12K	5%	1/4W
R22	1-249-440-11	CARBON	82K	5%	1/4W
R23	1-249-433-11	CARBON	22K	5%	1/4W
R24	1-249-440-11	CARBON	82K	5%	1/4W
R25	1-249-423-11	CARBON	3.3K	5%	1/4W
R26	1-249-429-11	CARBON	10K	5%	1/4W
R27	1-247-868-11	CARBON	36K	5%	1/4W
R28	1-249-429-11	CARBON	10K	5%	1/4W
R29	1-249-437-11	CARBON	47K	5%	1/4W
R30	1-249-429-11	CARBON	10K	5%	1/4W
R31	1-249-429-11	CARBON	10K	5%	1/4W
R32	1-249-417-11	CARBON	1K	5%	1/4W
R33	1-249-429-11	CARBON	10K	5%	1/4W
R34	1-249-433-11	CARBON	22K	5%	1/4W
R35	1-249-429-11	CARBON	10K	5%	1/4W
R36	1-249-429-11	CARBON	10K	5%	1/4W
R37	1-249-425-11	CARBON	4.7K	5%	1/4W
R38	1-249-417-11	CARBON	1K	5%	1/4W
R39	1-249-417-11	CARBON	1K	5%	1/4W
R40	1-249-417-11	CARBON	1K	5%	1/4W
R43	1-249-417-11	CARBON	1K	5%	1/4W
R44	1-249-429-11	CARBON	10K	5%	1/4W
R45	1-249-417-11	CARBON	1K	5%	1/4W
R46	1-249-429-11	CARBON	10K	5%	1/4W
R48	1-215-481-00	METAL	330K	1%	1/6W
R49	1-215-481-00	METAL	330K	1%	1/6W
R50	1-249-417-11	CARBON	1K	5%	1/4W
R51	1-249-429-11	CARBON	10K	5%	1/4W
R52	1-249-413-11	CARBON	470	5%	1/4W
R53	1-249-417-11	CARBON	1K	5%	1/4W
R54	1-215-421-00	METAL	1K	1%	1/6W
R59	1-249-417-11	CARBON	1K	5%	1/4W
R60	1-215-447-00	METAL	12K	1%	1/6W
R61	1-215-445-00	METAL	10K	1%	1/6W
R62	1-215-445-00	METAL	10K	1%	1/6W
R63	1-215-461-00	METAL	47K	1%	1/6W
R64	1-249-435-11	CARBON	33K	5%	1/4W
R65	1-249-433-11	CARBON	22K	5%	1/4W
R66	1-249-405-11	CARBON	100	5%	1/4W
R67	1-215-445-00	METAL	10K	1%	1/6W
R68	1-249-429-11	CARBON	10K	5%	1/4W
R69	1-215-445-00	METAL	10K	1%	1/6W
R70	1-215-459-00	METAL	39K	1%	1/6W
R71	1-215-459-00	METAL	39K	1%	1/6W
R72	1-249-429-11	CARBON	10K	5%	1/4W
R73	1-215-483-00	METAL	390K	1%	1/6W
R74	1-249-437-11	CARBON	47K	5%	1/4W
R75	1-249-441-11	CARBON	100K	5%	1/4W
R77	1-249-433-11	CARBON	22K	5%	1/4W
R79	1-215-459-00	METAL	39K	1%	1/6W
R80	1-215-459-00	METAL	39K	1%	1/6W
R81	1-215-481-00	METAL	330K	1%	1/6W
R82	1-249-437-11	CARBON	47K	5%	1/4W
R83	1-247-893-11	CARBON	390K	5%	1/4W
R84	1-249-429-11	CARBON	10K	5%	1/4W
R85	1-249-441-11	CARBON	100K	5%	1/4W
R86	1-249-433-11	CARBON	22K	5%	1/4W
R88	1-215-445-00	METAL	10K	1%	1/6W
R89	1-215-469-00	METAL	100K	1%	1/6W
R90	1-215-445-00	METAL	10K	1%	1/6W
R92	1-215-445-00	METAL	10K	1%	1/6W
R93	1-215-459-00	METAL	39K	1%	1/6W
R94	1-215-431-00	METAL	2.7K	1%	1/6W
R96	1-249-429-11	CARBON	10K	5%	1/4W
R97	1-249-433-11	CARBON	22K	5%	1/4W
R98	1-215-445-00	METAL	10K	1%	1/6W
R99	1-215-449-00	METAL	15K	1%	1/6W
R047	1-215-453-00	METAL	22K	1%	1/6W
R100	1-215-445-00	METAL	10K	1%	1/6W
R101	1-215-449-00	METAL	15K	1%	1/6W
R102	1-215-445-00	METAL	10K	1%	1/6W

Ref.No.	Part No.	Description				Remark
R103	1-249-437-11	CARBON	47K	5%	1/4W	
R104	1-215-445-00	METAL	10K	1%	1/6W	
R105	1-249-429-11	CARBON	10K	5%	1/4W	
R106	1-215-445-00	METAL	10K	1%	1/6W	
R107	1-215-461-00	METAL	47K	1%	1/6W	
R108	1-215-461-00	METAL	47K	1%	1/6W	
R109	1-215-485-00	METAL	470K	1%	1/6W	
R110	1-249-437-11	CARBON	47K	5%	1/4W	
R111	1-249-429-11	CARBON	10K	5%	1/4W	
R112	1-249-441-11	CARBON	100K	5%	1/4W	
R113	1-215-465-00	METAL	68K	1%	1/6W	
R114	1-215-421-00	METAL	1K	1%	1/6W	
R115	1-249-429-11	CARBON	10K	5%	1/4W	
R116	1-215-421-00	METAL	1K	1%	1/6W	
R117	1-215-413-00	METAL	470	1%	1/6W	
R118	1-249-437-11	CARBON	47K	5%	1/4W	
R119	1-249-441-11	CARBON	100K	5%	1/4W	
R120	1-215-449-00	METAL	15K	1%	1/6W	
R121	1-215-449-00	METAL	15K	1%	1/6W	
R122	1-215-449-00	METAL	15K	1%	1/6W	
R123	1-215-449-00	METAL	15K	1%	1/6W	
R127	1-249-405-11	CARBON	100	5%	1/4W	
R130	1-249-420-11	CARBON	1.8K	5%	1/4W	
R131	1-249-425-11	CARBON	4.7K	5%	1/4W	
R132	1-249-425-11	CARBON	4.7K	5%	1/4W	
R133	1-249-417-11	CARBON	1K	5%	1/4W	
R134	1-249-437-11	CARBON	47K	5%	1/4W	
R135	1-249-425-11	CARBON	4.7K	5%	1/4W	
R136	1-249-417-11	CARBON	1K	5%	1/4W	
R137	1-215-421-00	METAL	1K	1%	1/6W	
R138	1-215-452-00	METAL	20K	1%	1/6W	
R139	1-249-417-11	CARBON	1K	5%	1/4W	
R141	1-247-895-00	CARBON	470K	5%	1/4W	
R142	1-249-421-11	CARBON	2.2K	5%	1/4W	
R143	1-249-435-11	CARBON	33K	5%	1/4W	
R144	1-249-429-11	CARBON	10K	5%	1/4W	
R145	1-249-423-11	CARBON	3.3K	5%	1/4W	
R146	1-215-461-00	METAL	47K	1%	1/6W	
R147	1-249-429-11	CARBON	10K	5%	1/4W	
R148	1-249-433-11	CARBON	22K	5%	1/4W	
R149	1-249-429-11	CARBON	10K	5%	1/4W	
R150	1-249-429-11	CARBON	10K	5%	1/4W	
R151	1-215-441-00	METAL	6.8K	1%	1/6W	
R152	1-249-433-11	CARBON	22K	5%	1/4W	
R153	1-215-457-00	METAL	33K	1%	1/6W	
R154	1-215-453-00	METAL	22K	1%	1/6W	
R155	1-215-453-00	METAL	22K	1%	1/6W	
R156	1-215-469-00	METAL	100K	1%	1/6W	
R157	1-249-429-11	CARBON	10K	5%	1/4W	
R158	1-249-417-11	CARBON	1K	5%	1/4W	
R159	1-249-433-11	CARBON	22K	5%	1/4W	
R160	1-249-437-11	CARBON	47K	5%	1/4W	
R161	1-249-425-11	CARBON	4.7K	5%	1/4W	
R162	1-215-445-00	METAL	10K	1%	1/6W	
R163	1-249-407-11	CARBON	150	5%	1/4W	
R164	1-249-417-11	CARBON	1K	5%	1/4W	
R165	1-249-401-11	CARBON	47	5%	1/4W	
R166	1-249-430-11	CARBON	12K	5%	1/4W	
R167	1-249-401-11	CARBON	47	5%	1/4W	
R168	1-249-417-11	CARBON	1K	5%	1/4W	
R169	1-249-425-11	CARBON	4.7K	5%	1/4W	
R170	1-249-425-11	CARBON	4.7K	5%	1/4W	
R171	1-249-417-11	CARBON	1K	5%	1/4W	
R172	1-249-417-11	CARBON	1K	5%	1/4W	
R173	1-249-429-11	CARBON	10K	5%	1/4W	

Ref.No.	Part No.	Description				Remark
R174	1-249-425-11	CARBON	4.7K	5%	1/4W	
R175	1-249-420-11	CARBON	1.8K	5%	1/4W	
R176	1-249-420-11	CARBON	1.8K	5%	1/4W	
R178	1-249-425-11	CARBON	4.7K	5%	1/4W	
R179	1-249-429-11	CARBON	10K	5%	1/4W	
R180	1-249-429-11	CARBON	10K	5%	1/4W	
R181	1-249-417-11	CARBON	1K	5%	1/4W	
R186	1-249-417-11	CARBON	1K	5%	1/4W	
R187	1-249-425-11	CARBON	4.7K	5%	1/4W	
R190	1-249-423-11	CARBON	3.3K	5%	1/4W	
R191	1-249-429-11	CARBON	10K	5%	1/4W	
R192	1-249-429-11	CARBON	10K	5%	1/4W	
R194	1-249-425-11	CARBON	4.7K	5%	1/4W	
R195	1-249-425-11	CARBON	4.7K	5%	1/4W	
R196	1-249-421-11	CARBON	2.2K	5%	1/4W	
R197	1-249-429-11	CARBON	10K	5%	1/4W	
R198	1-249-420-11	CARBON	1.8K	5%	1/4W	
R199	1-249-420-11	CARBON	1.8K	5%	1/4W	
R200	1-249-429-11	CARBON	10K	5%	1/4W	
R201	1-249-429-11	CARBON	10K	5%	1/4W	
R202	1-249-425-11	CARBON	4.7K	5%	1/4W	
R203	1-249-435-11	CARBON	33K	5%	1/4W	
R204	1-249-441-11	CARBON	100K	5%	1/4W	
R205	1-249-417-11	CARBON	1K	5%	1/4W	
R206	1-249-417-11	CARBON	1K	5%	1/4W	
R207	1-249-437-11	CARBON	47K	5%	1/4W	
R208	1-249-421-11	CARBON	2.2K	5%	1/4W	
R209	1-247-895-00	CARBON	470K	5%	1/4W	
R210	1-249-417-11	CARBON	1K	5%	1/4W	
R211	1-249-429-11	CARBON	10K	5%	1/4W	
R212	1-249-417-11	CARBON	1K	5%	1/4W	
R213	1-249-429-11	CARBON	10K	5%	1/4W	
R214	1-249-421-11	CARBON	2.2K	5%	1/4W	
R215	1-249-433-11	CARBON	22K	5%	1/4W	
R216	1-249-417-11	CARBON	1K	5%	1/4W	
R217	1-249-417-11	CARBON	1K	5%	1/4W	
R218	1-249-441-11	CARBON	100K	5%	1/4W	
R219	1-247-895-00	CARBON	470K	5%	1/4W	
R220	1-249-429-11	CARBON	10K	5%	1/4W	
R221	1-249-429-11	CARBON	10K	5%	1/4W	
R222	1-249-433-11	CARBON	22K	5%	1/4W	
R223	1-249-437-11	CARBON	47K	5%	1/4W	
R224	1-249-425-11	CARBON	4.7K	5%	1/4W	
R225	1-249-429-11	CARBON	10K	5%	1/4W	
R226	1-215-453-00	METAL	22K	1%	1/6W	
R227	1-215-453-00	METAL	22K	1%	1/6W	
R228	1-215-477-00	METAL	220K	1%	1/6W	
R229	1-249-429-11	CARBON	10K	5%	1/4W	
R230	1-249-441-11	CARBON	100K	5%	1/4W	
R231	1-249-433-11	CARBON	22K	5%	1/4W	
R232	1-249-433-11	CARBON	22K	5%	1/4W	
R233	1-249-429-11	CARBON	10K	5%	1/4W	
R234	1-215-445-00	METAL	10K	1%	1/6W	
R235	1-215-445-00	METAL	10K	1%	1/6W	
R236	1-215-469-00	METAL	100K	1%	1/6W	
R237	1-249-441-11	CARBON	100K	5%	1/4W	
R238	1-249-429-11	CARBON	10K	5%	1/4W	
R239	1-249-433-11	CARBON	22K	5%	1/4W	
R240	1-249-433-11	CARBON	22K	5%	1/4W	
R241	1-215-451-00	METAL	18K	1%	1/6W	
R242	1-247-903-00	CARBON	1M	5%	1/4W	
R243	1-215-451-00	METAL	18K	1%	1/6W	
R244	1-249-429-11	CARBON	10K	5%	1/4W	
R245	1-215-451-00	METAL	18K	1%	1/6W	
R246	1-247-903-00	CARBON	1M	5%	1/4W	

D

Ref.No.	Part No.	Description				Remark
R247	1-215-451-00	METAL	18K	1%	1/6W	
R248	1-249-429-11	CARBON	10K	5%	1/4W	
R249	1-249-433-11	CARBON	22K	5%	1/4W	
R250	1-249-441-11	CARBON	100K	5%	1/4W	
R251	1-249-405-11	CARBON	100	5%	1/4W	
R252	1-249-405-11	CARBON	100	5%	1/4W	
R253	1-249-421-11	CARBON	2.2K	5%	1/4W	
R254	1-215-445-00	METAL	10K	1%	1/6W	
R255	1-249-429-11	CARBON	10K	5%	1/4W	
R256	1-215-445-00	METAL	10K	1%	1/6W	
R257	1-249-429-11	CARBON	10K	5%	1/4W	
R262	1-215-445-00	METAL	10K	1%	1/6W	
R263	1-249-429-11	CARBON	10K	5%	1/4W	
R264	1-215-445-00	METAL	10K	1%	1/6W	
R265	1-249-433-11	CARBON	22K	5%	1/4W	
R266	1-249-441-11	CARBON	100K	5%	1/4W	
R267	1-249-405-11	CARBON	100	5%	1/4W	
R268	1-249-417-11	CARBON	1K	5%	1/4W	
R269	1-215-445-00	METAL	10K	1%	1/6W	
R270	1-249-429-11	CARBON	10K	5%	1/4W	
R271	1-215-445-00	METAL	10K	1%	1/6W	
R272	1-215-469-00	METAL	100K	1%	1/6W	
R273	1-249-429-11	CARBON	10K	5%	1/4W	
R274	1-249-417-11	CARBON	1K	5%	1/4W	
R275	1-249-405-11	CARBON	100	5%	1/4W	
R276	1-249-433-11	CARBON	22K	5%	1/4W	
R277	1-249-435-11	CARBON	33K	5%	1/4W	
R278	1-249-425-11	CARBON	4.7K	5%	1/4W	
R279	1-249-425-11	CARBON	4.7K	5%	1/4W	
R280	1-249-413-11	CARBON	470	5%	1/4W	
R281	1-249-433-11	CARBON	22K	5%	1/4W	
R282	1-249-421-11	CARBON	2.2K	5%	1/4W	
R283	1-249-417-11	CARBON	1K	5%	1/4W	
R284	1-247-895-00	CARBON	470K	5%	1/4W	
R285	1-247-895-00	CARBON	470K	5%	1/4W	
R286	1-215-469-00	METAL	100K	1%	1/6W	
R287	1-249-429-11	CARBON	10K	5%	1/4W	
R288	1-249-417-11	CARBON	1K	5%	1/4W	
R289	1-249-405-11	CARBON	100	5%	1/4W	
R290	1-249-433-11	CARBON	22K	5%	1/4W	
R291	1-249-435-11	CARBON	33K	5%	1/4W	
R292	1-249-425-11	CARBON	4.7K	5%	1/4W	
R293	1-249-413-11	CARBON	470	5%	1/4W	
R294	1-249-425-11	CARBON	4.7K	5%	1/4W	
R295	1-249-421-11	CARBON	2.2K	5%	1/4W	
R296	1-249-433-11	CARBON	22K	5%	1/4W	
R297	1-247-895-00	CARBON	470K	5%	1/4W	
R298	1-249-417-11	CARBON	1K	5%	1/4W	
R299	1-247-895-00	CARBON	470K	5%	1/4W	
R300	1-215-437-00	METAL	4.7K	1%	1/6W	
R301	1-215-437-00	METAL	4.7K	1%	1/6W	
R302	1-249-421-11	CARBON	2.2K	5%	1/4W	
R303	1-249-423-11	CARBON	3.3K	5%	1/4W	
R309	1-215-453-00	METAL	22K	1%	1/6W	
R310	1-215-453-00	METAL	22K	1%	1/6W	
R311	1-215-461-00	METAL	47K	1%	1/6W	
R312	1-215-453-00	METAL	22K	1%	1/6W	
R313	1-215-453-00	METAL	22K	1%	1/6W	
R314	1-215-453-00	METAL	22K	1%	1/6W	
R315	1-215-453-00	METAL	22K	1%	1/6W	
R316	1-215-453-00	METAL	22K	1%	1/6W	
R317	1-215-453-00	METAL	22K	1%	1/6W	
R318	1-215-453-00	METAL	22K	1%	1/6W	
R319	1-215-453-00	METAL	22K	1%	1/6W	
R320	1-215-461-00	METAL	47K	1%	1/6W	
R321	1-215-453-00	METAL	22K	1%	1/6W	
R322	1-215-453-00	METAL	22K	1%	1/6W	
R323	1-215-457-00	METAL	33K	1%	1/6W	
R324	1-215-461-00	METAL	47K	1%	1/6W	
R325	1-215-461-00	METAL	47K	1%	1/6W	
R326	1-215-461-00	METAL	47K	1%	1/6W	
R327	1-215-457-00	METAL	33K	1%	1/6W	
R328	1-215-457-00	METAL	33K	1%	1/6W	
R329	1-215-477-00	METAL	220K	1%	1/6W	
R330	1-215-469-00	METAL	100K	1%	1/6W	
R331	1-215-477-00	METAL	220K	1%	1/6W	
R332	1-215-457-00	METAL	33K	1%	1/6W	
R333	1-215-421-00	METAL	1K	1%	1/6W	
R334	1-249-433-11	CARBON	22K	5%	1/4W	
R335	1-249-437-11	CARBON	47K	5%	1/4W	
R336	1-215-457-00	METAL	33K	1%	1/6W	
R337	1-215-461-00	METAL	47K	1%	1/6W	
R338	1-215-461-00	METAL	47K	1%	1/6W	
R339	1-215-461-00	METAL	47K	1%	1/6W	
R340	1-215-457-00	METAL	33K	1%	1/6W	
R341	1-215-461-00	METAL	47K	1%	1/6W	
R342	1-215-453-00	METAL	22K	1%	1/6W	
R343	1-249-433-11	CARBON	22K	5%	1/4W	
R344	1-215-445-00	METAL	10K	1%	1/6W	
R345	1-215-469-00	METAL	100K	1%	1/6W	
R346	1-249-429-11	CARBON	10K	5%	1/4W	
R347	1-215-445-00	METAL	10K	1%	1/6W	
R350	1-215-437-00	METAL	4.7K	1%	1/6W	
R351	1-249-429-11	CARBON	10K	5%	1/4W	
R352	1-249-405-11	CARBON	100	5%	1/4W	
R353	1-249-433-11	CARBON	22K	5%	1/4W	
R354	1-249-417-11	CARBON	1K	5%	1/4W	
R355	1-249-421-11	CARBON	2.2K	5%	1/4W	
R356	1-249-393-11	CARBON	10	5%	1/4W	F
R357	1-249-393-11	CARBON	10	5%	1/4W	F
R358	1-249-435-11	CARBON	33K	5%	1/4W	
R359	1-249-429-11	CARBON	10K	5%	1/4W	
R360	1-215-397-00	METAL	100	1%	1/6W	
R361	1-249-421-11	CARBON	2.2K	5%	1/4W	
R362	1-249-425-11	CARBON	4.7K	5%	1/4W	
R363	1-249-425-11	CARBON	4.7K	5%	1/4W	
R364	1-249-413-11	CARBON	470	5%	1/4W	
R366	1-249-421-11	CARBON	2.2K	5%	1/4W	
R367	1-249-433-11	CARBON	22K	5%	1/4W	
R369	1-215-479-00	METAL	270K	1%	1/6W	
R370	1-249-417-11	CARBON	1K	5%	1/4W	
R371	1-247-895-00	CARBON	470K	5%	1/4W	
R372	1-215-469-00	METAL	100K	1%	1/6W	
R373	1-202-735-00	SOLID	22M	10%	1/2W	
R374	1-215-477-00	METAL	220K	1%	1/6W	
R375	1-247-895-00	CARBON	470K	5%	1/4W	
R376	1-249-435-11	CARBON	33K	5%	1/4W	
R377	1-215-437-00	METAL	4.7K	1%	1/6W	
R378	1-215-469-00	METAL	100K	1%	1/6W	
R379	1-249-429-11	CARBON	10K	5%	1/4W	
R380	1-215-437-00	METAL	4.7K	1%	1/6W	
R381	1-215-461-00	METAL	47K	1%	1/6W	
R382	1-249-405-11	CARBON	100	5%	1/4W	
R383	1-249-433-11	CARBON	22K	5%	1/4W	
R384	1-249-425-11	CARBON	4.7K	5%	1/4W	
R385	1-249-417-11	CARBON	1K	5%	1/4W	
R386	1-249-433-11	CARBON	22K	5%	1/4W	
R387	1-215-421-00	METAL	1K	1%	1/6W	
R389	1-249-405-11	CARBON	100	5%	1/4W	
R390	1-249-435-11	CARBON	33K	5%	1/4W	

Ref.No.	Part No.	Description				Remark
R391	1-249-425-11	CARBON	4.7K	5%	1/4W	
R392	1-249-425-11	CARBON	4.7K	5%	1/4W	
R393	1-249-413-11	CARBON	470	5%	1/4W	
R394	1-249-405-11	CARBON	100	5%	1/4W	
R395	1-249-421-11	CARBON	2.2K	5%	1/4W	
R396	1-249-433-11	CARBON	22K	5%	1/4W	
R397	1-249-417-11	CARBON	1K	5%	1/4W	
R398	1-247-895-00	CARBON	470K	5%	1/4W	
R399	1-249-421-11	CARBON	2.2K	5%	1/4W	
R400	1-247-895-00	CARBON	470K	5%	1/4W	
R401	1-249-437-11	CARBON	47K	5%	1/4W	
R406	1-215-431-00	METAL	2.7K	1%	1/6W	
R407	1-215-453-00	METAL	22K	1%	1/6W	
R410	1-247-903-00	CARBON	1M	5%	1/4W	
R411	1-247-903-00	CARBON	1M	5%	1/4W	
R412	1-215-421-00	METAL	1K	1%	1/6W	
R413	1-215-445-00	METAL	10K	1%	1/6W	
R414	1-215-445-00	METAL	10K	1%	1/6W	
R415	1-249-405-11	CARBON	100	5%	1/4W	
R450	1-249-429-11	CARBON	10K	5%	1/4W	
R452	1-249-423-11	CARBON	3.3K	5%	1/4W	
R453	1-249-401-11	CARBON	47	5%	1/4W	F
R454	1-249-393-11	CARBON	10	5%	1/4W	
R455	1-249-413-11	CARBON	470	5%	1/4W	
R456	1-249-405-11	CARBON	100	5%	1/4W	
R457	1-249-405-11	CARBON	100	5%	1/4W	
R458	1-249-427-11	CARBON	6.8K	5%	1/4W	
R501	1-249-417-11	CARBON	1K	5%	1/4W	
R503	1-249-437-11	CARBON	47K	5%	1/4W	
R504	1-249-441-11	CARBON	100K	5%	1/4W	
R505	1-215-421-00	METAL	1K	1%	1/6W	
R506	1-249-430-11	CARBON	12K	5%	1/4W	
R507	1-249-417-11	CARBON	1K	5%	1/4W	
R508	1-249-429-11	CARBON	10K	5%	1/4W	
R509	1-249-417-11	CARBON	1K	5%	1/4W	
R510	1-249-417-11	CARBON	1K	5%	1/4W	
R511	1-249-429-11	CARBON	10K	5%	1/4W	
R512	1-249-429-11	CARBON	10K	5%	1/4W	
R513	1-249-429-11	CARBON	10K	5%	1/4W	
R514	1-249-433-11	CARBON	22K	5%	1/4W	
R515	1-249-421-11	CARBON	2.2K	5%	1/4W	
R516	1-249-421-11	CARBON	2.2K	5%	1/4W	
R517	1-249-421-11	CARBON	2.2K	5%	1/4W	
R518	1-249-433-11	CARBON	22K	5%	1/4W	
R519	1-249-433-11	CARBON	22K	5%	1/4W	
R520	1-249-429-11	CARBON	10K	5%	1/4W	
R521	1-215-421-00	METAL	1K	1%	1/6W	
R522	1-215-421-00	METAL	1K	1%	1/6W	
R523	1-215-421-00	METAL	1K	1%	1/6W	
R524	1-215-421-00	METAL	1K	1%	1/6W	
R525	1-215-449-00	METAL	15K	1%	1/6W	
R526	1-215-449-00	METAL	15K	1%	1/6W	
R527	1-215-449-00	METAL	15K	1%	1/6W	
R528	1-215-449-00	METAL	15K	1%	1/6W	
R529	1-215-443-00	METAL	8.2K	1%	1/6W	
R530	1-215-449-00	METAL	15K	1%	1/6W	
R531	1-215-449-00	METAL	15K	1%	1/6W	
R532	1-215-443-00	METAL	8.2K	1%	1/6W	
R533	1-215-421-00	METAL	1K	1%	1/6W	
R534	1-215-413-00	METAL	470	1%	1/6W	
R535	1-249-429-11	CARBON	10K	5%	1/4W	
R536	1-249-429-11	CARBON	10K	5%	1/4W	
R537	1-249-429-11	CARBON	10K	5%	1/4W	
R538	1-249-427-11	CARBON	6.8K	5%	1/4W	
R539	1-249-427-11	CARBON	6.8K	5%	1/4W	
R540	1-249-405-11	CARBON	100	5%	1/4W	
R541	1-249-429-11	CARBON	10K	5%	1/4W	
R542	1-215-437-00	METAL	4.7K	1%	1/6W	
R543	1-215-437-00	METAL	4.7K	1%	1/6W	
R544	1-249-425-11	CARBON	4.7K	5%	1/4W	
R545	1-249-429-11	CARBON	10K	5%	1/4W	
R546	1-249-417-11	CARBON	1K	5%	1/4W	
R548	1-249-417-11	CARBON	1K	5%	1/4W	
R549	1-249-417-11	CARBON	1K	5%	1/4W	
R550	1-247-895-00	CARBON	470K	5%	1/4W	
R551	1-215-405-00	METAL	220	1%	1/6W	
R552	1-215-421-00	METAL	1K	1%	1/6W	
R554	1-249-425-11	CARBON	4.7K	5%	1/4W	
R555	1-215-429-00	METAL	2.2K	1%	1/6W	
R556	1-249-429-11	CARBON	10K	5%	1/4W	
R560	1-249-433-11	CARBON	22K	5%	1/4W	
R561	1-249-433-11	CARBON	22K	5%	1/4W	
R562	1-249-429-11	CARBON	10K	5%	1/4W	
R563	1-249-420-11	CARBON	1.8K	5%	1/4W	
R564	1-249-433-11	CARBON	22K	5%	1/4W	
R565	1-249-429-11	CARBON	10K	5%	1/4W	
R566	1-249-437-11	CARBON	47K	5%	1/4W	
R567	1-215-451-00	METAL	18K	1%	1/6W	
R568	1-215-453-00	METAL	22K	1%	1/6W	
R569	1-247-895-00	CARBON	470K	5%	1/4W	
R570	1-249-421-11	CARBON	2.2K	5%	1/4W	
R571	1-249-425-11	CARBON	4.7K	5%	1/4W	
R572	1-249-431-11	CARBON	15K	5%	1/4W	
R573	1-249-441-11	CARBON	100K	5%	1/4W	
R574	1-249-417-11	CARBON	1K	5%	1/4W	
R575	1-249-425-11	CARBON	4.7K	5%	1/4W	
R576	1-215-453-00	METAL	22K	1%	1/6W	
R577	1-215-445-00	METAL	10K	1%	1/6W	
R578	1-249-429-11	CARBON	10K	5%	1/4W	
R579	1-249-393-11	CARBON	10	5%	1/4W	F
R580	1-249-393-11	CARBON	10	5%	1/4W	F
R581	1-249-389-11	CARBON	4.7	5%	1/4W	F
R582	1-249-425-11	CARBON	4.7K	5%	1/4W	
R583	1-249-429-11	CARBON	10K	5%	1/4W	
R585	1-215-431-00	METAL	2.7K	1%	1/6W	
R586	1-249-427-11	CARBON	6.8K	5%	1/4W	
R587	1-249-433-11	CARBON	22K	5%	1/4W	

VARIABLE RESISTOR

RV1	1-237-517-21	RES, ADJ, CERMET 5K
RV2	1-237-517-21	RES, ADJ, CERMET 5K
RV3	1-237-518-21	RES, ADJ, CERMET 10K
RV4	1-237-517-21	RES, ADJ, CERMET 5K
RV5	1-237-517-21	RES, ADJ, CERMET 5K
RV6	1-237-517-21	RES, ADJ, CERMET 5K
RV7	1-237-519-21	RES, ADJ, CERMET 20K
RV8	1-237-519-21	RES, ADJ, CERMET 20K
RV9	1-237-517-21	RES, ADJ, CERMET 5K
RV10	1-237-518-21	RES, ADJ, CERMET 10K
RV11	1-237-518-21	RES, ADJ, CERMET 10K
RV12	1-237-519-21	RES, ADJ, CERMET 20K
RV13	1-237-518-21	RES, ADJ, CERMET 10K
RV14	1-237-518-21	RES, ADJ, CERMET 10K
RV15	1-237-519-21	RES, ADJ, CERMET 20K
RV16	1-237-519-21	RES, ADJ, CERMET 20K
RV17	1-237-519-21	RES, ADJ, CERMET 20K
RV18	1-237-519-21	RES, ADJ, CERMET 20K
RV19	1-237-519-21	RES, ADJ, CERMET 20K
RV22	1-237-518-21	RES, ADJ, CERMET 10K

D W YA JA

Ref.No.	Part No.	Description	Remark
RV23	1-237-518-21	RES, ADJ, CERMET 10K	
RV24	1-237-518-21	RES, ADJ, CERMET 10K	
RV25	1-237-518-21	RES, ADJ, CERMET 10K	
RV26	1-237-518-21	RES, ADJ, CERMET 10K	
RV27	1-237-518-21	RES, ADJ, CERMET 10K	
RV28	1-237-518-21	RES, ADJ, CERMET 10K	
RV29	1-237-518-21	RES, ADJ, CERMET 10K	
RV30	1-237-518-21	RES, ADJ, CERMET 10K	
RV31	1-237-518-21	RES, ADJ, CERMET 10K	
RV32	1-237-518-21	RES, ADJ, CERMET 10K	
RV33	1-237-518-21	RES, ADJ, CERMET 10K	
RV34	1-237-518-21	RES, ADJ, CERMET 10K	
RV35	1-237-518-21	RES, ADJ, CERMET 10K	
RV36	1-237-518-21	RES, ADJ, CERMET 10K	
RV37	1-237-518-21	RES, ADJ, CERMET 10K	
RV38	1-237-518-21	RES, ADJ, CERMET 10K	
RV39	1-237-518-21	RES, ADJ, CERMET 10K	
RV40	1-237-518-21	RES, ADJ, CERMET 10K	
RV41	1-237-518-21	RES, ADJ, CERMET 10K	
RV42	1-237-518-21	RES, ADJ, CERMET 10K	
RV43	1-237-518-21	RES, ADJ, CERMET 10K	
RV44	1-237-518-21	RES, ADJ, CERMET 10K	
RV45	1-237-518-21	RES, ADJ, CERMET 10K	
RV46	1-237-518-21	RES, ADJ, CERMET 10K	
RV47	1-237-518-21	RES, ADJ, CERMET 10K	
RV48	1-237-518-21	RES, ADJ, CERMET 10K	
RV49	1-237-518-21	RES, ADJ, CERMET 10K	
RV50	1-237-518-21	RES, ADJ, CERMET 10K	
RV51	1-237-518-21	RES, ADJ, CERMET 10K	
RV52	1-237-521-21	RES, ADJ, CERMET 100K	
RV53	1-237-518-21	RES, ADJ, CERMET 10K	
RV54	1-237-520-21	RES, ADJ, CERMET 50K	
RV55	1-237-520-21	RES, ADJ, CERMET 50K	
RV56	1-237-518-21	RES, ADJ, CERMET 10K	
RV57	1-237-518-21	RES, ADJ, CERMET 10K	
RV58	1-237-519-21	RES, ADJ, CERMET 20K	
RV59	1-237-520-21	RES, ADJ, CERMET 50K	
RV60	1-237-519-21	RES, ADJ, CERMET 20K	
RV61	1-237-519-21	RES, ADJ, CERMET 20K	
RV62	1-237-518-21	RES, ADJ, CERMET 10K	
RV63	1-237-518-21	RES, ADJ, CERMET 10K	
RV64	1-237-518-21	RES, ADJ, CERMET 10K	
RV65	1-237-518-21	RES, ADJ, CERMET 10K	
RV66	1-237-519-21	RES, ADJ, CERMET 20K	
RV67	1-237-519-21	RES, ADJ, CERMET 20K	
RV68	1-237-519-21	RES, ADJ, CERMET 20K	
RV69	1-237-519-21	RES, ADJ, CERMET 20K	
RV70	1-224-250-99	RES, ADJ, METAL GLAZE 2.2K	
RV71	1-237-518-21	RES, ADJ, CERMET 10K	
RV72	1-237-517-21	RES, ADJ, CERMET 5K	
RV73	1-237-517-21	RES, ADJ, CERMET 5K	
RV74	1-237-517-21	RES, ADJ, CERMET 5K	
RV75	1-237-516-21	RES, ADJ, CERMET 2K	
RV76	1-237-512-21	RES, ADJ, CERMET 100	
RV77	1-237-517-21	RES, ADJ, CERMET 5K	
RV78	1-237-518-21	RES, ADJ, CERMET 10K	

****

*1-619-842-11 W BOARD
****

CAPACITOR

C1	1-124-589-11	ELECT	47MF	20%	16V
C2	1-124-589-11	ELECT	47MF	20%	16V
C3	1-136-165-00	FILM	0.1MF	5%	50V

IC

IC1	8-759-208-14	IC TC4066BPHB
IC2	8-759-208-14	IC TC4066BPHB

RESISTOR

R1	1-215-459-00	METAL	39K	1%	1/6W
R2	1-215-459-00	METAL	39K	1%	1/6W
R3	1-215-459-00	METAL	39K	1%	1/6W
R4	1-215-459-00	METAL	39K	1%	1/6W
R5	1-215-459-00	METAL	39K	1%	1/6W
R6	1-215-459-00	METAL	39K	1%	1/6W
R7	1-215-453-00	METAL	22K	1%	1/6W
R8	1-215-453-00	METAL	22K	1%	1/6W
R9	1-215-453-00	METAL	22K	1%	1/6W
R10	1-215-453-00	METAL	22K	1%	1/6W
R11	1-215-453-00	METAL	22K	1%	1/6W
R12	1-215-453-00	METAL	22K	1%	1/6W

VARIABLE RESISTOR

RV1	1-237-518-21	RES, ADJ, CERMET 10K
RV2	1-237-518-21	RES, ADJ, CERMET 10K
RV3	1-237-518-21	RES, ADJ, CERMET 10K
RV4	1-237-518-21	RES, ADJ, CERMET 10K
RV5	1-237-518-21	RES, ADJ, CERMET 10K
RV6	1-237-518-21	RES, ADJ, CERMET 10K
RV7	1-237-518-21	RES, ADJ, CERMET 10K
RV8	1-237-518-21	RES, ADJ, CERMET 10K
RV9	1-237-518-21	RES, ADJ, CERMET 10K
RV10	1-237-518-21	RES, ADJ, CERMET 10K
RV11	1-237-518-21	RES, ADJ, CERMET 10K
RV12	1-237-518-21	RES, ADJ, CERMET 10K

SWITCH

SW1	1-553-634-00	SWITCH, ROTARY
SW2	1-570-509-11	SWITCH, TOGGLE
SW3	1-570-509-11	SWITCH, TOGGLE

CONNECTOR

W1	*1-566-060-11	PIN, CONNECTOR 8P
W2	*1-566-058-11	PIN, CONNECTOR 6P

****

*1-629-771-11 YA BOARD
****

*4-360-299-01 HOLDER, LED

DIODE

D1	8-719-812-43	DIODE TLG124A

****

*1-626-506-11 JA BOARD
****

*4-378-902-01 HOLDER, LED

Ref.No.	Part No.	Description			Remark
		CAPACITOR			
C101	1-126-157-11	ELECT	10MF	20% 16V	
C102	1-126-157-11	ELECT	10MF	20% 16V	
C103	1-126-157-11	ELECT	10MF	20% 16V	
C104	1-101-004-00	CERAMIC	0.01MF	50V	
C105	1-101-004-00	CERAMIC	0.01MF	50V	
C106	1-101-004-00	CERAMIC	0.01MF	50V	
C107	1-101-004-00	CERAMIC	0.01MF	50V	
C108	1-101-004-00	CERAMIC	0.01MF	50V	
C109	1-101-004-00	CERAMIC	0.01MF	50V	
		DIODE			
D101	8-719-938-68	DIODE GL3HY8			
D102	8-719-938-68	DIODE GL3HY8			
D103	8-719-938-68	DIODE GL3HY8			
D104	8-719-938-68	DIODE GL3HY8			
D105	8-719-911-19	DIODE 1SS119			
D106	8-719-911-19	DIODE 1SS119			
D108	8-719-911-19	DIODE 1SS119			
D109	8-719-911-19	DIODE 1SS119			
		IC			
IC1	8-759-240-53	IC TC4053BP			
IC2	8-759-240-53	IC TC4053BP			
IC3	8-759-645-19	IC M54519P			
		CONNECTOR			
JA1	*1-566-058-11	PIN, CONNECTOR 6P			
JA2	*1-566-056-11	PIN, CONNECTOR 4P			
JA3	*1-566-056-11	PIN, CONNECTOR 4P			
		TRANSISTOR			
Q101	8-729-119-78	TRANSISTOR 2SC2785-HFE			
Q102	8-729-900-36	TRANSISTOR DTC124ES			
Q103	8-729-900-36	TRANSISTOR DTC124ES			
		RESISTOR			
R103	1-249-428-11	CARBON	8.2K	5% 1/4W	
R104	1-249-428-11	CARBON	8.2K	5% 1/4W	
R105	1-215-425-00	METAL	1.5K	1% 1/6W	
R106	1-215-445-00	METAL	10K	1% 1/6W	
R108	1-249-405-11	CARBON	100	5% 1/4W	
R109	1-249-405-11	CARBON	100	5% 1/4W	
R110	1-249-405-11	CARBON	100	5% 1/4W	
R111	1-249-405-11	CARBON	100	5% 1/4W	
R112	1-249-429-11	CARBON	10K	5% 1/4W	
R113	1-249-405-11	CARBON	100	5% 1/4W	
R114	1-249-405-11	CARBON	100	5% 1/4W	
R115	1-249-405-11	CARBON	100	5% 1/4W	
R116	1-249-429-11	CARBON	10K	5% 1/4W	
R117	1-249-405-11	CARBON	100	5% 1/4W	
R118	1-249-429-11	CARBON	10K	5% 1/4W	
R119	1-249-405-11	CARBON	100	5% 1/4W	
R120	1-249-405-11	CARBON	100	5% 1/4W	
R121	1-249-428-11	CARBON	8.2K	5% 1/4W	
R122	1-249-428-11	CARBON	8.2K	5% 1/4W	
R123	1-249-405-11	CARBON	100	5% 1/4W	
R124	1-249-417-11	CARBON	1K	5% 1/4W	
R125	1-249-429-11	CARBON	10K	5% 1/4W	
R126	1-249-429-11	CARBON	10K	5% 1/4W	
R127	1-249-405-11	CARBON	100	5% 1/4W	
R128	1-249-405-11	CARBON	100	5% 1/4W	
R129	1-249-405-11	CARBON	100	5% 1/4W	
R130	1-249-429-11	CARBON	10K	5% 1/4W	
		VARIABLE RESISTOR			
RV101	1-237-519-21	RES, ADJ, CERMET 20K			
RV102	1-237-121-11	RES, VAR (CP ELEMENT) 20K			
RV103	1-237-519-21	RES, ADJ, CERMET 20K			
RV104	1-237-121-11	RES, VAR (CP ELEMENT) 20K			
		SWITCH			
S101	1-570-509-11	SWITCH, TOGGLE			
S102	1-570-509-11	SWITCH, TOGGLE			
S103	1-554-472-00	SWITCH, PUSH (1 KEY)			
S104	1-554-472-00	SWITCH, PUSH (1 KEY)			
S105	1-554-472-00	SWITCH, PUSH (1 KEY)			
S106	1-554-472-00	SWITCH, PUSH (1 KEY)			
S107	1-554-472-00	SWITCH, PUSH (1 KEY)			
S108	1-570-509-11	SWITCH, TOGGLE			
S109	1-570-509-11	SWITCH, TOGGLE			
S110	1-570-510-11	SWITCH, TOGGLE			
S111	*1-561-724-00	SOCKET, CONNECTOR 2P			
S111	*1-564-431-11	POST, CONNECTOR 3P			
S112	*1-561-724-00	SOCKET, CONNECTOR 2P			
S112	*1-564-431-11	POST, CONNECTOR 3P			
S113	1-570-510-11	SWITCH, TOGGLE			
		**********			
	*1-627-688-11	JB BOARD			
		********			
		CONNECTOR			
JB1	*1-566-054-11	PIN, CONNECTOR 2P			
JB2	*1-566-054-11	PIN, CONNECTOR 2P			
JB3	*1-566-054-11	PIN, CONNECTOR 2P			
JB4	*1-566-057-11	PIN, CONNECTOR 5P			
JB5	*1-566-054-11	PIN, CONNECTOR 2P			
		SWITCH			
S1	1-570-372-11	SWITCH, PUSH (1 KEY)			
S2	1-554-472-00	SWITCH, PUSH (1 KEY)			
S3	1-554-472-00	SWITCH, PUSH (1 KEY)			
S4	1-554-472-00	SWITCH, PUSH (1 KEY)			
S5	1-570-509-11	SWITCH, TOGGLE			
		**********			
	*A-1389-709-A	XA BOARD, COMPLETE			
		**********			
	*1-563-164-11	CONNECTOR, MULTI (L-J) 64P			
	4-378-915-01	NUT (M2.6), PLATE			
		CONNECTOR			
XA1	*1-562-729-11	CONNECTOR, MULTI 64P			

The components identified by shading and mark ⚠ are critical for safety.
Replace only with part number specified.

K ZN L ZA

Ref.No.	Part No.	Description	Remark
	*1-610-380-12	K BOARD *******	
		CAPACITOR	
C1	⚠1-162-169-12	CAP BLOCK, HIGH-VOLTAGE	
C2	1-136-106-00	FILM 0.36MF 5% 200V	
		CONNECTOR	
K1	*1-508-768-00	PIN, CONNECTOR (5MM PITCH) 6P	
K2	*1-508-766-00	PIN, CONNECTOR (5MM PITCH) 4P	
K3	*1-566-055-11	PIN, CONNECTOR 3P	
K4	*1-566-059-11	PIN, CONNECTOR 7P	
K5	*1-566-058-11	PIN, CONNECTOR 6P	
K6	*1-508-765-00	PIN, CONNECTOR (5MM PITCH) 3P	
K8	*1-508-784-00	PIN, CONNECTOR (5MM PITCH) 1P	
		RESISTOR	
R1	1-202-818-00	SOLID 1K 10% 1/2W	
**********			
	*1-626-502-11	ZN BOARD ********	
		CONNECTOR	
ZN1	*1-562-768-11	RECEPTACLE, MULTI CONNECTOR 64P	
	4-378-915-01	NUT (M2.6), PLATE; ZN1	
ZN2	*1-562-768-11	RECEPTACLE, MULTI CONNECTOR 64P	
	4-378-915-01	NUT (M2.6), PLATE; ZN2	
ZN3	*1-562-768-11	RECEPTACLE, MULTI CONNECTOR 64P	
	4-378-915-01	NUT (M2.6), PLATE; ZN3	
ZN4	*1-562-768-11	RECEPTACLE, MULTI CONNECTOR 64P	
	4-378-915-01	NUT (M2.6), PLATE; ZN4	
ZN5	*1-562-768-11	RECEPTACLE, MULTI CONNECTOR 64P	
	4-378-915-01	NUT (M2.6), PLATE; ZN5	
ZN6	*1-562-768-11	RECEPTACLE, MULTI CONNECTOR 64P	
	4-378-915-01	NUT (M2.6), PLATE; ZN6	
ZN7	*1-562-768-11	RECEPTACLE, MULTI CONNECTOR 64P	
	4-378-915-01	NUT (M2.6), PLATE; ZN7	
ZN8	*1-562-768-11	RECEPTACLE, MULTI CONNECTOR 64P	
	4-378-915-01	NUT (M2.6), PLATE; ZN8	
ZN9	*1-566-060-11	PIN, CONNECTOR 8P	
ZN10	*1-566-060-11	PIN, CONNECTOR 8P	
ZN11	*1-566-060-11	PIN, CONNECTOR 8P	
ZN12	*1-566-058-11	PIN, CONNECTOR 6P	
ZN14	*1-566-062-11	PIN, CONNECTOR 10P	
ZN15	*1-566-057-11	PIN, CONNECTOR 5P	
ZN16	*1-566-057-11	PIN, CONNECTOR 5P	
ZN17	*1-566-057-11	PIN, CONNECTOR 5P	
ZN19	*1-566-054-11	PIN, CONNECTOR 2P	
ZN21	*1-566-059-11	PIN, CONNECTOR 7P	
ZN22	*1-566-058-11	PIN, CONNECTOR 6P	
ZN23	*1-566-058-11	PIN, CONNECTOR 6P	
ZN25	*1-566-058-11	PIN, CONNECTOR 6P	
ZN26	*1-566-058-11	PIN, CONNECTOR 6P	
ZN27	*1-566-058-11	PIN, CONNECTOR 6P	
ZN30	*1-562-768-11	RECEPTACLE, MULTI CONNECTOR 64P	
	4-378-915-01	NUT (M2.6), PLATE; ZN30	

Ref.No.	Part No.	Description	Remark
	*1-629-774-11	L BOARD *******	
		DIODE	
D1	8-719-920-21	DIODE LT-9220H	
		RESISTOR	
R1	1-249-408-11	CARBON 180 5% 1/4W	
**********			
	*A-1394-142-A	ZA BOARD, COMPLETE ******************	
	*4-353-708-00	HOOK, FINGER	
	4-378-915-01	NUT (M2.6), PLATE	
		CAPACITOR	
C1	1-123-661-00	ELECT 100MF 20% 6.3V	
C2	1-123-661-00	ELECT 100MF 20% 6.3V	
C3	1-124-589-11	ELECT 47MF 20% 16V	
C4	1-124-589-11	ELECT 47MF 20% 16V	
C5	1-124-589-11	ELECT 47MF 20% 16V	
C6	1-124-589-11	ELECT 47MF 20% 16V	
C7	1-101-004-00	CERAMIC 0.01MF 50V	
C8	1-101-004-00	CERAMIC 0.01MF 50V	
C9	1-131-365-00	TANTALUM 10MF 10% 16V	
C10	1-101-004-00	CERAMIC 0.01MF 50V	
C11	1-101-004-00	CERAMIC 0.01MF 50V	
C12	1-131-365-00	TANTALUM 10MF 10% 16V	
C13	1-102-973-00	CERAMIC 100PF 10% 50V	
C14	1-102-980-00	CERAMIC 270PF 5% 50V	
C20	1-101-001-00	CERAMIC 0.001MF 50V	
C21	1-101-001-00	CERAMIC 0.001MF 50V	
C22	1-101-001-00	CERAMIC 0.001MF 50V	
C23	1-101-001-00	CERAMIC 0.001MF 50V	
C24	1-101-001-00	CERAMIC 0.001MF 50V	
C25	1-101-001-00	CERAMIC 0.001MF 50V	
C26	1-101-001-00	CERAMIC 0.001MF 50V	
C27	1-101-001-00	CERAMIC 0.001MF 50V	
C28	1-101-001-00	CERAMIC 0.001MF 50V	
C29	1-101-001-00	CERAMIC 0.001MF 50V	
C30	1-101-001-00	CERAMIC 0.001MF 50V	
C31	1-101-001-00	CERAMIC 0.001MF 50V	
C34	1-101-001-00	CERAMIC 0.001MF 50V	
C35	1-101-001-00	CERAMIC 0.001MF 50V	
C50	1-101-004-00	CERAMIC 0.01MF 50V	
C51	1-101-004-00	CERAMIC 0.01MF 50V	
C52	1-101-004-00	CERAMIC 0.01MF 50V	
C53	1-101-004-00	CERAMIC 0.01MF 50V	
C54	1-101-004-00	CERAMIC 0.01MF 50V	
C55	1-101-004-00	CERAMIC 0.01MF 50V	
C56	1-101-004-00	CERAMIC 0.01MF 50V	
C57	1-101-004-00	CERAMIC 0.01MF 50V	
C58	1-101-004-00	CERAMIC 0.01MF 50V	
C59	1-101-004-00	CERAMIC 0.01MF 50V	
C60	1-101-004-00	CERAMIC 0.01MF 50V	
C61	1-101-004-00	CERAMIC 0.01MF 50V	
C62	1-101-004-00	CERAMIC 0.01MF 50V	
C63	1-101-004-00	CERAMIC 0.01MF 50V	
C64	1-101-004-00	CERAMIC 0.01MF 50V	
C65	1-101-004-00	CERAMIC 0.01MF 50V	
C66	1-101-004-00	CERAMIC 0.01MF 50V	

Ref.No.	Part No.	Description	Remark
C67	1-101-004-00	CERAMIC 0.01MF	50V
C68	1-101-004-00	CERAMIC 0.01MF	50V
C69	1-101-004-00	CERAMIC 0.01MF	50V
C70	1-101-004-00	CERAMIC 0.01MF	50V
C71	1-101-004-00	CERAMIC 0.01MF	50V
C72	1-101-004-00	CERAMIC 0.01MF	50V
C78	1-101-004-00	CERAMIC 0.01MF	50V
C79	1-101-004-00	CERAMIC 0.01MF	50V
C80	1-101-004-00	CERAMIC 0.01MF	50V
C81	1-101-004-00	CERAMIC 0.01MF	50V
C82	1-101-004-00	CERAMIC 0.01MF	50V
C83	1-101-004-00	CERAMIC 0.01MF	50V
C84	1-101-004-00	CERAMIC 0.01MF	50V
C85	1-101-004-00	CERAMIC 0.01MF	50V
C86	1-101-004-00	CERAMIC 0.01MF	50V
		IC	
IC1	8-759-903-93	IC SN74LS393N	
IC2	8-759-900-00	IC SN74LS00N	
IC3	8-759-900-00	IC SN74LS00N	
IC4	8-759-900-08	IC SN74LS08N	
IC5	8-759-900-00	IC SN74LS00N	
IC6	8-759-900-14	IC SN74LS14N	
IC7	8-759-903-93	IC SN74LS393N	
IC8	8-759-773-14	IC TBP28L42N-CURSB	
	*1-526-656-00	SOCKET, IC (DP) 20P; IC8	
IC9	8-759-902-73	IC SN74LS273N	
IC10	8-759-901-51	IC SN74LS151N	
IC11	8-759-900-00	IC SN74LS00N	
IC12	8-759-900-86	IC SN74LS86N	
IC13	8-759-903-93	IC SN74LS393N	
IC14	8-759-768-51	IC MB7053-DLYC	
	*1-526-654-00	SOCKET, IC (DP) 16P; IC14	
IC15	8-759-900-74	IC SN74LS74AN	
IC16	8-759-903-93	IC SN74LS393N	
IC17	8-759-773-14	IC TBP28L42N-CURSB	
	*1-526-656-00	SOCKET, IC (DP) 20P: IC17	
IC18	8-759-902-73	IC SN74LS273N	
IC19	8-759-901-51	IC SN74LS151N	
IC20	8-759-901-38	IC SN74LS138N	
IC21	8-759-901-38	IC SN74LS138N	
IC22	8-759-901-39	IC SN74LS139N	
IC23	8-759-902-44	IC SN74LS244N	
IC24	8-759-902-73	IC SN74LS273N	
IC25	8-759-902-73	IC SN74LS273N	
IC26	8-759-902-73	IC SN74LS273N	
IC27	8-759-902-73	IC SN74LS273N	
IC28	8-759-901-38	IC SN74LS138N	
IC29	8-749-900-14	IC CP2005S	
IC30	8-749-900-14	IC CP2005S	
IC31	8-749-900-14	IC CP2005S	
IC32	8-749-900-14	IC CP2005S	
IC33	8-749-900-14	IC CP2005S	
IC34	8-749-900-14	IC CP2005S	
IC36	8-749-900-14	IC CP2005S	
IC37	8-759-145-57	IC UPC4557C	
IC38	8-759-145-57	IC UPC4557C	
IC39	8-759-145-57	IC UPC4557C	
IC40	8-759-145-57	IC UPC4557C	
IC41	8-759-145-57	IC UPC4557C	
IC42	8-759-145-57	IC UPC4557C	
IC44	8-759-145-57	IC UPC4557C	
IC45	8-759-107-33	IC UPC1060C	
IC46	8-759-107-33	IC UPC1060C	

Ref.No.	Part No.	Description			Remark
		COIL			
L1	1-409-309-00	COIL, SN 72UH			
		TRANSISTOR			
Q3	8-729-900-36	TRANSISTOR DTC124ES			
Q4	8-729-900-36	TRANSISTOR DTC124ES			
		RESISTOR			
R1	1-249-405-11	CARBON	100	5%	1/4W
R2	1-249-406-11	CARBON	120	5%	1/4W
R3	1-247-848-11	CARBON	5.1K	5%	1/4W
R4	1-247-848-11	CARBON	5.1K	5%	1/4W
R5	1-215-432-00	METAL	3K	1%	1/6W
R6	1-215-432-00	METAL	3K	1%	1/6W
R7	1-215-432-00	METAL	3K	1%	1/6W
R8	1-215-432-00	METAL	3K	1%	1/6W
R9	1-215-432-00	METAL	3K	1%	1/6W
R10	1-215-432-00	METAL	3K	1%	1/6W
R11	1-215-432-00	METAL	3K	1%	1/6W
R12	1-215-432-00	METAL	3K	1%	1/6W
R13	1-215-432-00	METAL	3K	1%	1/6W
R14	1-215-432-00	METAL	3K	1%	1/6W
R15	1-215-432-00	METAL	3K	1%	1/6W
R16	1-215-432-00	METAL	3K	1%	1/6W
R19	1-215-432-00	METAL	3K	1%	1/6W
R20	1-215-432-00	METAL	3K	1%	1/6W
R21	1-249-405-11	CARBON	100	5%	1/4W
R22	1-215-447-00	METAL	12K	1%	1/6W
R23	1-215-447-00	METAL	12K	1%	1/6W
R24	1-249-405-11	CARBON	100	5%	1/4W
R25	1-215-447-00	METAL	12K	1%	1/6W
R26	1-215-447-00	METAL	12K	1%	1/6W
R27	1-249-405-11	CARBON	100	5%	1/4W
R28	1-215-447-00	METAL	12K	1%	1/6W
R29	1-215-447-00	METAL	12K	1%	1/6W
R30	1-249-405-11	CARBON	100	5%	1/4W
R31	1-215-447-00	METAL	12K	1%	1/6W
R32	1-215-447-00	METAL	12K	1%	1/6W
R33	1-249-405-11	CARBON	100	5%	1/4W
R34	1-215-447-00	METAL	12K	1%	1/6W
R35	1-215-447-00	METAL	12K	1%	1/6W
R36	1-249-405-11	CARBON	100	5%	1/4W
R37	1-215-447-00	METAL	12K	1%	1/6W
R38	1-215-447-00	METAL	12K	1%	1/6W
R39	1-215-397-00	METAL	100	1%	1/6W
R40	1-215-447-00	METAL	12K	1%	1/6W
R41	1-215-447-00	METAL	12K	1%	1/6W
R42	1-215-455-00	METAL	27K	1%	1/6W
R43	1-215-447-00	METAL	12K	1%	1/6W
R44	1-215-447-00	METAL	12K	1%	1/6W
R45	1-215-397-00	METAL	100	1%	1/6W
R46	1-215-447-00	METAL	12K	1%	1/6W
R47	1-215-447-00	METAL	12K	1%	1/6W
R48	1-215-455-00	METAL	27K	1%	1/6W
R49	1-215-447-00	METAL	12K	1%	1/6W
R50	1-215-447-00	METAL	12K	1%	1/6W
R51	1-215-397-00	METAL	100	1%	1/6W
R52	1-215-447-00	METAL	12K	1%	1/6W
R53	1-215-447-00	METAL	12K	1%	1/6W
R54	1-215-455-00	METAL	27K	1%	1/6W
R55	1-215-447-00	METAL	12K	1%	1/6W

ZA ZC

Ref.No.	Part No.	Description				Remark
R56	1-215-447-00	METAL	12K	1%	1/6W	
R63	1-249-405-11	CARBON	100	5%	1/4W	
R64	1-215-447-00	METAL	12K	1%	1/6W	
R65	1-215-447-00	METAL	12K	1%	1/6W	
R67	1-215-447-00	METAL	12K	1%	1/6W	
R68	1-215-447-00	METAL	12K	1%	1/6W	
		RESISTOR BLOCK				
RB1	1-231-408-00	RESISTOR BLOCK 5.1K				
RB2	1-231-408-00	RESISTOR BLOCK 5.1K				
		CONNECTOR				
ZA1	*1-562-729-11	CONNECTOR, MULTI 64P				
**********						
	*A-1394-143-A	ZC BOARD, COMPLETE				
		**********				
	*4-353-708-00	HOOK, FINGER				
	4-378-915-01	NUT (M2.6), PLATE				
		CAPACITOR				
C1	1-123-661-00	ELECT	100MF	20%	6.3V	
C2	1-123-661-00	ELECT	100MF	20%	6.3V	
C4	1-124-589-11	ELECT	47MF	20%	16V	
C5	1-124-589-11	ELECT	47MF	20%	16V	
C6	1-126-157-11	ELECT	10MF	20%	16V	
C7	1-102-973-00	CERAMIC	100PF	5%	50V	
C8	1-101-004-00	CERAMIC	0.01MF		50V	
C9	1-101-004-00	CERAMIC	0.01MF		50V	
C10	1-101-004-00	CERAMIC	0.01MF		50V	
C11	1-101-004-00	CERAMIC	0.01MF		50V	
C12	1-101-004-00	CERAMIC	0.01MF		50V	
C13	1-101-004-00	CERAMIC	0.01MF		50V	
C14	1-101-004-00	CERAMIC	0.01MF		50V	
C15	1-101-004-00	CERAMIC	0.01MF		50V	
C16	1-101-004-00	CERAMIC	0.01MF		50V	
C17	1-101-004-00	CERAMIC	0.01MF		50V	
C18	1-101-004-00	CERAMIC	0.01MF		50V	
C19	1-101-004-00	CERAMIC	0.01MF		50V	
C20	1-101-004-00	CERAMIC	0.01MF		50V	
C21	1-101-004-00	CERAMIC	0.01MF		50V	
C22	1-101-004-00	CERAMIC	0.01MF		50V	
C23	1-102-961-00	CERAMIC	27PF	5%	50V	
C24	1-101-004-00	CERAMIC	0.01MF		50V	
C25	1-101-004-00	CERAMIC	0.01MF		50V	
C26	1-101-004-00	CERAMIC	0.01MF		50V	
C27	1-101-004-00	CERAMIC	0.01MF		50V	
		DIODE				
D1	8-719-911-19	DIODE 1SS119				
D2	8-719-911-19	DIODE 1SS119				
D3	8-719-911-19	DIODE 1SS119				
D4	8-719-800-60	DIODE TLR214				
D5	8-719-800-60	DIODE TLR214				
D6	8-719-800-60	DIODE TLR214				
		IC				
IC1	8-759-900-14	IC SN74LS14N				

Ref.No.	Part No.	Description	Remark
IC2	8-759-900-32	IC SN74LS32N	
IC3	8-759-916-80	IC LH0080A	
	1-526-662-21	SOCKET, IC (DP) 40P; IC3	
IC4	8-759-741-19	IC MBM2764-HDMH2.1	
	*1-526-659-00	SOCKET, IC (DP) 28P; IC4	
IC5	8-752-321-00	IC CXK5816PN-12L	
	*1-526-658-21	SOCKET, IC (DP) 24P; IC5	
IC6	8-759-748-33	IC HN58C65P-25	
	*1-526-659-00	SOCKET, IC (DP) 28P; IC6	
IC7	8-759-902-44	IC SN74LS244N	
IC8	8-759-902-44	IC SN74LS244N	
IC9	8-759-906-45	IC SN74LS645N	
IC10	8-759-910-04	IC SN74S04N	
IC11	8-759-903-93	IC SN74LS393N	
IC12	8-759-926-31	IC AM26LS31PC	
	*1-526-654-00	SOCKET, IC (DP) 16P; IC12	
IC13	8-759-926-32	IC AM26LS32PC	
	*1-526-654-00	SOCKET, IC (DP) 16P; IC13	
IC14	8-759-916-84	IC LH0084A	
	1-526-662-21	SOCKET, IC (DP) 40P; IC14	
IC15	8-759-916-82	IC LH0082AD	
	*1-526-659-00	SOCKET, IC (DP) 28P; IC15	
IC16	8-759-901-39	IC SN74LS139N	
IC17	8-759-901-38	IC SN74LS138N	
IC18	8-759-901-38	IC SN74LS138N	
IC19	8-759-900-04	IC SN74LS04N	
IC20	8-759-900-32	IC SN74LS32N	
IC21	8-759-900-02	IC SN74LS02N	
IC22	8-759-900-32	IC SN74LS32N	
IC23	8-759-903-77	IC SN74LS377N	
IC24	8-759-903-77	IC SN74LS377N	
IC25	8-759-902-40	IC SN74LS240N	
IC26	8-759-645-19	IC M54519P	
	*1-526-654-00	SOCKET, IC (DP) 16P; IC26	
IC27	8-759-645-19	IC M54519P	
	*1-526-654-00	SOCKET, IC (DP) 16P; IC27	
		COIL	
L1	1-409-309-00	COIL, SN 72UH	
		TRANSISTOR	
Q1	8-729-173-38	TRANSISTOR 2SA733-K	
Q2	8-729-245-82	TRANSISTOR 2SC2458-Y	
Q3	8-729-173-38	TRANSISTOR 2SA733-K	
		RESISTOR	
R1	1-249-437-11	CARBON 47K 5% 1/4W	
R2	1-249-437-11	CARBON 47K 5% 1/4W	
R3	1-249-413-11	CARBON 470 5% 1/4W	
R4	1-249-411-11	CARBON 330 5% 1/4W	
R5	1-249-411-11	CARBON 330 5% 1/4W	
R6	1-249-405-11	CARBON 100 5% 1/4W	
R7	1-249-411-11	CARBON 330 5% 1/4W	
R8	1-249-429-11	CARBON 10K 5% 1/4W	
R9	1-249-429-11	CARBON 10K 5% 1/4W	
R10	1-249-429-11	CARBON 10K 5% 1/4W	
R11	1-249-429-11	CARBON 10K 5% 1/4W	
R12	1-249-409-11	CARBON 220 5% 1/4W	
R13	1-249-420-11	CARBON 1.8K 5% 1/4W	
R14	1-249-405-11	CARBON 100 5% 1/4W	
R15	1-249-442-11	CARBON 510 5% 1/4W	

Ref.No.	Part No.	Description				Remark
R16	1-249-417-11	CARBON	1K	5%	1/4W	
R17	1-247-814-11	CARBON	200	5%	1/4W	
R18	1-249-397-11	CARBON	22	5%	1/4W	
R19	1-249-397-11	CARBON	22	5%	1/4W	
R20	1-249-405-11	CARBON	100	5%	1/4W	
R21	1-249-437-11	CARBON	47K	5%	1/4W	
R22	1-249-405-11	CARBON	100	5%	1/4W	
R23	1-249-401-11	CARBON	47	5%	1/4W	
R24	1-249-401-11	CARBON	47	5%	1/4W	
R25	1-249-425-11	CARBON	4.7K	5%	1/4W	
R26	1-249-401-11	CARBON	47	5%	1/4W	
R27	1-249-437-11	CARBON	47K	5%	1/4W	
R28	1-249-401-11	CARBON	47	5%	1/4W	
R29	1-249-401-11	CARBON	47	5%	1/4W	
R30	1-249-401-11	CARBON	47	5%	1/4W	
R31	1-249-405-11	CARBON	100	5%	1/4W	
R32	1-249-405-11	CARBON	100	5%	1/4W	
R33	1-249-405-11	CARBON	100	5%	1/4W	
R34	1-249-393-11	CARBON	10	5%	1/4W	
R35	1-249-405-11	CARBON	100	5%	1/4W	
R36	1-249-405-11	CARBON	100	5%	1/4W	
R37	1-249-417-11	CARBON	1K	5%	1/4W	
R38	1-249-417-11	CARBON	1K	5%	1/4W	
R39	1-249-417-11	CARBON	1K	5%	1/4W	
		RESISTOR BLOCK				
RB1	1-231-410-00	RESISTOR BLOCK 10K				
RB2	1-231-410-00	RESISTOR BLOCK 10K				
RB3	1-231-410-00	RESISTOR BLOCK 10K				
RB4	1-231-410-00	RESISTOR BLOCK 10K				
		SWITCH				
SW1	1-553-997-12	SWITCH, KEY BOARD				
SW2	1-553-997-12	SWITCH, KEY BOARD				
		CRYSTAL				
X1	1-527-827-00	OSCILLATOR, CRYSTAL				
		CONNECTOR				
ZC1	*1-562-729-11	CONNECTOR, MULTI 64P				
ZC2	*1-561-724-00	SOCKET, CONNECTOR 2P				
ZC2	*1-564-431-11	POST, CONNECTOR 3P				
**********						
	*A-1394-168-A	ZD BOARD, COMPLETE				
		**********				
	*1-528-166-11	BATTERY, LITHIUM (BUTTON TYPE)				
	*1-561-724-00	SOCKET, CONNECTOR 2P				
	3-618-225-00	NUT, PLATE				
	*4-353-708-00	HOOK, FINGER				
	4-378-915-01	NUT (M2.6), PLATE				
	4-812-134-11	RIVET NYLON, 3.5				
		CAPACITOR				
C1	1-123-661-00	ELECT	100MF	20%	6.3V	
C2	1-101-004-00	CERAMIC	0.01MF		50V	
C3	1-123-661-00	ELECT	100MF	20%	6.3V	
C4	1-101-001-00	CERAMIC	0.001MF		50V	
C5	1-131-365-00	TANTALUM	10MF	10%	16V	

Ref.No.	Part No.	Description			Remark
C6	1-101-004-00	CERAMIC	0.01MF		50V
C7	1-101-004-00	CERAMIC	0.01MF		50V
C8	1-131-373-61	TANTALUM	22MF	10%	16V
C9	1-101-004-00	CERAMIC	0.01MF		50V
C10	1-131-373-61	TANTALUM	22MF	10%	16V
C11	1-101-004-00	CERAMIC	0.01MF		50V
C12	1-131-373-61	TANTALUM	22MF	10%	16V
C13	1-101-004-00	CERAMIC	0.01MF		50V
C14	1-131-373-61	TANTALUM	22MF	10%	16V
C15	1-101-004-00	CERAMIC	0.01MF		50V
C16	1-101-004-00	CERAMIC	0.01MF		50V
C17	1-101-004-00	CERAMIC	0.01MF		50V
C18	1-101-004-00	CERAMIC	0.01MF		50V
C19	1-101-004-00	CERAMIC	0.01MF		50V
C20	1-101-004-00	CERAMIC	0.01MF		50V
C21	1-123-661-00	ELECT	100MF	20%	6.3V
C22	1-101-004-00	CERAMIC	0.01MF		50V
C23	1-131-365-00	TANTALUM	10MF	10%	16V
C24	1-101-004-00	CERAMIC	0.01MF		50V
C25	1-131-365-00	TANTALUM	10MF	10%	16V
C26	1-131-365-00	TANTALUM	10MF	10%	16V
C27	1-102-980-00	CERAMIC	270PF	5%	50V
C28	1-131-365-00	TANTALUM	10MF	10%	16V
C29	1-102-980-00	CERAMIC	270PF	5%	50V
C30	1-102-980-00	CERAMIC	270PF	5%	50V
C31	1-101-004-00	CERAMIC	0.01MF		50V
C32	1-101-004-00	CERAMIC	0.01MF		50V
C33	1-131-365-00	TANTALUM	10MF	10%	16V
C34	1-102-980-00	CERAMIC	270PF	5%	50V
C35	1-131-365-00	TANTALUM	10MF	10%	16V
C36	1-101-004-00	CERAMIC	0.01MF		50V
C37	1-101-004-00	CERAMIC	0.01MF		50V
C38	1-101-004-00	CERAMIC	0.01MF		50V
C39	1-101-004-00	CERAMIC	0.01MF		50V
C40	1-101-004-00	CERAMIC	0.01MF		50V
C41	1-101-004-00	CERAMIC	0.01MF		50V
C42	1-102-980-00	CERAMIC	270PF	5%	50V
C43	1-131-365-00	TANTALUM	10MF	10%	16V
C44	1-101-004-00	CERAMIC	0.01MF		50V
C45	1-101-001-00	CERAMIC	0.001MF		50V
C46	1-101-001-00	CERAMIC	0.001MF		50V
C47	1-101-001-00	CERAMIC	0.001MF		50V
C48	1-101-001-00	CERAMIC	0.001MF		50V
		DIODE			
D1	8-719-908-06	DIODE ERA81-005			
D2	8-719-911-19	DIODE 1SS119			
D3	8-719-911-19	DIODE 1SS119			
D4	8-719-911-19	DIODE 1SS119			
		IC			
IC1	8-759-741-13	IC TBP28L42N-VAEB			
	*1-526-656-00	SOCKET, IC (DP) 20P; IC1			
IC2	8-759-203-21	IC TC74HC273P			
	*1-526-656-00	SOCKET, IC (DP) 20P: IC2			
IC3	8-759-109-88	IC UPC624C			
IC4	8-759-107-33	IC UPC1060C			
IC5	8-759-990-82	IC TL082CP			
IC6	8-759-203-40	IC TC74HC393P			
IC7	8-759-203-24	IC TC74HC283P			
IC8	8-759-202-55	IC TC74HC244P			
IC9	8-759-202-17	IC TC74HC14P			
IC10	8-759-741-14	IC TBP28L42N-HAEC			

ZD N

Ref.No.	Part No.	Description	Remark
	*1-526-656-00	SOCKET, IC (DP) 20P; IC10	
IC11	8-759-203-36	IC TC74HC374P	
IC12	8-759-202-26	IC TC74HC138P	
IC13	8-752-328-10	IC CXK5864BP-10L	
	*1-526-659-00	SOCKET, IC (DP) 28P; IC13	
IC14	8-759-202-55	IC TC74HC244P	
IC15	8-759-902-57	IC SN74LS257AN	
IC16	8-759-974-70	IC SN7470N	
IC17	8-759-202-21	IC TC74HC32P	
IC18	8-759-906-45	IC SN74LS645N	
IC19	8-759-203-36	IC TC74HC374P	
IC20	8-759-203-36	IC TC74HC374P	
IC21	8-759-203-36	IC TC74HC374P	
IC22	8-759-203-36	IC TC74HC374P	
IC23	8-759-203-36	IC TC74HC374P	
IC24	8-759-203-36	IC TC74HC374P	
IC25	8-759-203-36	IC TC74HC374P	
IC26	8-759-203-36	IC TC74HC374P	
IC27	8-749-900-14	IC CP2005S	
IC28	8-749-900-14	IC CP2005S	
IC29	8-749-900-14	IC CP2005S	
IC30	8-749-900-14	IC CP2005S	
IC31	8-759-990-82	IC TL082CP	
IC32	8-759-990-82	IC TL082CP	
IC33	8-759-700-30	IC NJM7908A	
IC34	8-759-700-53	IC NJM7808A	
IC35	8-759-982-21	IC RC78L05A	
		COIL	
L1	1-409-309-00	COIL, SN 72UH	
		RESISTOR	
R1	1-249-425-11	CARBON 4.7K 5% 1/4W	
R2	1-249-425-11	CARBON 4.7K 5% 1/4W	
R3	1-215-423-00	METAL 1.2K 1% 1/6W	
R4	1-215-423-00	METAL 1.2K 1% 1/6W	
R5	1-215-423-00	METAL 1.2K 1% 1/6W	
R6	1-215-423-00	METAL 1.2K 1% 1/6W	
R7	1-249-405-11	CARBON 100 5% 1/4W	
R8	1-249-411-11	CARBON 330 5% 1/4W	
R9	1-249-411-11	CARBON 330 5% 1/4W	
R10	1-249-411-11	CARBON 330 5% 1/4W	
R11	1-249-411-11	CARBON 330 5% 1/4W	
R12	1-249-429-11	CARBON 10K 5% 1/4W	
R13	1-249-429-11	CARBON 10K 5% 1/4W	
R14	1-215-433-00	METAL 3.3K 1% 1/6W	
R15	1-215-433-00	METAL 3.3K 1% 1/6W	
R16	1-215-433-00	METAL 3.3K 1% 1/6W	
R17	1-249-429-11	CARBON 10K 5% 1/4W	
R18	1-249-429-11	CARBON 10K 5% 1/4W	
R19	1-249-429-11	CARBON 10K 5% 1/4W	
R20	1-215-433-00	METAL 3.3K 1% 1/6W	
R21	1-215-433-00	METAL 3.3K 1% 1/6W	
R22	1-215-433-00	METAL 3.3K 1% 1/6W	
R23	1-215-433-00	METAL 3.3K 1% 1/6W	
R24	1-215-433-00	METAL 3.3K 1% 1/6W	
R25	1-215-433-00	METAL 3.3K 1% 1/6W	
R26	1-215-433-00	METAL 3.3K 1% 1/6W	
R27	1-215-433-00	METAL 3.3K 1% 1/6W	
R28	1-215-433-00	METAL 3.3K 1% 1/6W	
R29	1-215-433-00	METAL 3.3K 1% 1/6W	
R30	1-215-433-00	METAL 3.3K 1% 1/6W	
R31	1-215-433-00	METAL 3.3K 1% 1/6W	
R32	1-215-433-00	METAL 3.3K 1% 1/6W	
R33	1-249-429-11	CARBON 10K 5% 1/4W	
R34	1-249-441-11	CARBON 100K 5% 1/4W	
R35	1-249-399-11	CARBON 33 5% 1/4W	
		RESISTOR BLOCK	
RB1	1-231-410-00	RESISTOR BLOCK 10K	
RB2	1-231-410-00	RESISTOR BLOCK 10K	
		CONNECTOR	
ZD1	*1-562-729-11	CONNECTOR, MULTI 64P	
ZD2	*1-564-431-11	POST, CONNECTOR 3P	
		**********	
	*A-1394-176-A	N BOARD, COMPLETE	
		**********	
	*1-563-673-11	CONNECTOR 14P	
	1-807-662-11	LIQUID CRYSTAL MODULE	
	4-383-316-01	KNOB (B), VOL	
	*4-384-616-01	SPACER (B)	
		CAPACITOR	
C2	1-131-382-00	TANTALUM 6.8MF 10% 6.3V	
C4	1-136-157-00	FILM 0.022MF 5% 50V	
C5	1-123-661-00	ELECT 100MF 20% 6.3V	
C7	1-101-004-00	CERAMIC 0.01MF 50V	
C9	1-101-004-00	CERAMIC 0.01MF 50V	
C10	1-101-004-00	CERAMIC 0.01MF 50V	
C12	1-101-004-00	CERAMIC 0.01MF 50V	
C13	1-101-004-00	CERAMIC 0.01MF 50V	
C14	1-101-004-00	CERAMIC 0.01MF 50V	
C15	1-102-947-00	CERAMIC 10PF 0.5PF 50V	
C16	1-102-947-00	CERAMIC 10PF 0.5PF 50V	
C17	1-101-004-00	CERAMIC 0.01MF 50V	
C18	1-131-365-00	TANTALUM 10MF 10% 16V	
C19	1-101-004-00	CERAMIC 0.01MF 50V	
C20	1-126-157-11	ELECT 10MF 20% 16V	
C21	1-124-589-11	ELECT 47MF 20% 16V	
C22	1-131-365-00	TANTALUM 10MF 10% 16V	
		RESISTOR BLOCK	
CP1	1-231-410-00	RESISTOR BLOCK 10K	
		DIODE	
D4	8-719-911-19	DIODE 1SS119	
D5	8-719-911-19	DIODE 1SS119	
D6	8-719-911-19	DIODE 1SS119	
D7	8-719-911-19	DIODE 1SS119	
D8	8-719-911-19	DIODE 1SS119	
D9	8-719-911-19	DIODE 1SS119	
D10	8-719-911-19	DIODE 1SS119	
D11	8-719-911-19	DIODE 1SS119	
D12	8-719-911-19	DIODE 1SS119	
D13	8-719-911-19	DIODE 1SS119	
D14	8-719-911-19	DIODE 1SS119	
D15	8-719-911-19	DIODE 1SS119	
D16	8-719-911-19	DIODE 1SS119	
D17	8-719-911-19	DIODE 1SS119	
D18	8-719-911-19	DIODE 1SS119	

The components identified by shading and mark ⚠ are critical for safety.
Replace only with part number specified.

N

Ref.No.	Part No.	Description	Remark
D19	8-719-911-19	DIODE 1SS119	
D20	8-719-911-19	DIODE 1SS119	
D23	8-719-939-59	DIODE SLP273B-01	
D24	8-719-939-59	DIODE SLP273B-01	
D25	8-719-939-59	DIODE SLP273B-01	
D26	8-719-903-17	DIODE SLP271E	
D27	8-719-903-17	DIODE SLP271E	
D28	8-719-911-19	DIODE 1SS119	
D29	8-719-911-19	DIODE 1SS119	
		IC	
IC2	8-759-202-89	IC TC74HC139P	
IC3	8-759-741-20	IC MBM27C256A-HDMC3.1	
	*1-526-659-00	SOCKET, IC (DP) 28P; IC3	
IC4	8-759-203-35	IC TC74HC373P	
IC5	8-759-103-91	IC UPD7810G	
IC6	8-759-951-58	IC SN75158P	
IC7	8-759-926-32	IC AM26LS32PC	
IC8	8-759-645-19	IC M54519P	
IC9	8-759-202-17	IC TC74HC14P	
		CONNECTOR	
N1	*1-563-732-11	SOCKET, ROUND TYPE 8P	
N2	*1-566-054-11	PIN, CONNECTOR 2P	
N3	*1-564-860-11	PIN, CONNECTOR (STRAIGHT) 14P	
N6	*1-566-056-11	PIN, CONNECTOR 4P	
N7	*1-566-056-11	PIN, CONNECTOR 4P	
		TRANSISTOR	
Q1	8-729-119-78	TRANSISTOR 2SC2785-HFE	
Q2	8-729-119-78	TRANSISTOR 2SC2785-HFE	
Q3	8-729-600-60	TRANSISTOR 2SA1115P	
Q4	8-729-600-60	TRANSISTOR 2SA1115P	
		RESISTOR	
R5	1-249-429-11	CARBON 10K 5% 1/4W	
R6	1-249-429-11	CARBON 10K 5% 1/4W	
R7	1-247-726-11	CARBON 33K 5% 1/4W	
R8	1-247-699-11	CARBON 82 5% 1/4W	
R11	1-249-429-11	CARBON 10K 5% 1/4W	
R12	1-249-401-11	CARBON 47 5% 1/4W	
R13	1-249-401-11	CARBON 47 5% 1/4W	
R14	1-249-429-11	CARBON 10K 5% 1/4W	
R15	1-249-401-11	CARBON 47 5% 1/4W	
R16	1-249-429-11	CARBON 10K 5% 1/4W	
R17	1-249-429-11	CARBON 10K 5% 1/4W	
R18	1-249-429-11	CARBON 10K 5% 1/4W	
R21	1-249-429-11	CARBON 10K 5% 1/4W	
R23	1-249-429-11	CARBON 10K 5% 1/4W	
R24	1-249-405-11	CARBON 100 5% 1/4W	
R25	1-249-429-11	CARBON 10K 5% 1/4W	
R26	1-249-429-11	CARBON 10K 5% 1/4W	
R27	1-249-420-11	CARBON 1.8K 5% 1/4W	
R30	1-249-429-11	CARBON 10K 5% 1/4W	
R33	1-249-401-11	CARBON 47 5% 1/4W	
R36	1-249-401-11	CARBON 47 5% 1/4W	
R37	1-249-425-11	CARBON 4.7K 5% 1/4W	
R38	1-249-401-11	CARBON 47 5% 1/4W	
R39	1-249-429-11	CARBON 10K 5% 1/4W	
R40	1-249-429-11	CARBON 10K 5% 1/4W	
R41	1-249-429-11	CARBON 10K 5% 1/4W	
R42	1-249-417-11	CARBON 1K 5% 1/4W	
R43	1-249-417-11	CARBON 1K 5% 1/4W	
R44	1-249-417-11	CARBON 1K 5% 1/4W	
		VARIABLE RESISTOR	
RV3	1-228-594-00	RES, VAR, CARBON 10K	
RV4	1-224-940-00	RES, ADJ, CERMET 10K	
		SWITCH	
S2	1-570-101-41	SWITCH, KEY BOARD	
S3	1-570-101-41	SWITCH, KEY BOARD	
S4	1-570-101-41	SWITCH, KEY BOARD	
S5	1-570-101-41	SWITCH, KEY BOARD	
S6	1-570-101-41	SWITCH, KEY BOARD	
S7	1-570-101-41	SWITCH, KEY BOARD	
S8	1-570-101-41	SWITCH, KEY BOARD	
S9	1-570-101-41	SWITCH, KEY BOARD	
S10	1-570-101-41	SWITCH, KEY BOARD	
S11	1-570-101-41	SWITCH, KEY BOARD	
S12	1-570-101-41	SWITCH, KEY BOARD	
S13	1-570-101-41	SWITCH, KEY BOARD	
S14	1-570-101-41	SWITCH, KEY BOARD	
S15	1-570-101-41	SWITCH, KEY BOARD	
S16	1-570-101-41	SWITCH, KEY BOARD	
S17	1-570-101-41	SWITCH, KEY BOARD	
		TRANSFORMER	
T1	1-448-704-11	TRANSFORMER, CONVERTER	
		CRYSTAL	
X1	1-527-828-00	OSCILLATOR, CRYSTAL	
		**********	
		MISCELLANEOUS	
		**********	
	⚠ 1-230-618-11	RESISTOR ASSY, HIGH-VOLTAGE	
	⚠ 1-413-227-11	SWITCHING REGULATOR (CR-15EN)	
	⚠ 1-413-251-13	SWITCHING REGULATOR (SF-11)	
	⚠ 1-413-287-12	REGULATOR, SWITCHING (TK-18)	
	1-426-292-11	COIL, LANDING CORRECTION (A)	
	1-426-293-11	COIL, LANDING CORRECTION (B)	
	1-452-032-00	MAGNET, DISK; 10MM ø	
	1-452-094-00	MAGNET, ROTATABLE DISK; 15MM ø	
	⚠ 1-453-107-11	HIGH-VOLTAGE BLOCK (DCT BLOCK)	
	1-533-148-00	HOLDER, FUSE	
	*1-557-152-81	CABLE, PIN	
	*1-559-134-11	CONNECTOR ASSY	
CNP901	⚠ 1-509-546-11	3P INLET	
F901	⚠ 1-532-748-11	FUSE, GLASS TUBE 6.3A/125V(HDM-2830 ONLY)	
	⚠ 1-532-350-11	FUSE, TIME-LAG 4A/250V(HDM-2830E ONLY)	
L901	⚠ 1-426-294-11	COIL, DEMAGNETIZATION	
L902	⚠ 1-451-326-11	DEFLECTION YOKE (SY-181)	
L903	⚠ 1-452-117-31	PICTURE TUBE NECK ASSY	
L904	⚠ 1-452-261-22	PICTURE TUBE NECK ASSY (362)	
S901	⚠ 1-554-967-12	SWITCH, PUSH (AC POWER)(1 KEY)	
S902	⚠ 1-554-913-11	SWITCH, SLIDE (VOLTAGE CHANGE)	
T901	⚠ 1-439-381-21	TRANSFORMER ASSY, FLYBACK	
V901	⚠ 8-738-452-75	PICTURE TUBE (M72KCF20X)	

The components identified by shading and mark ⚠ are critical for safety.
Replace only with part number specified.

ACCESSORIES AND PACKING MATERIALS
****

Part No.	Description	Remark
*X-4378-950-1	TABLE ASSY, BOTTOM	
⚠ 1-532-748-11	FUSE, GLASS TUBE 6.3A/125V (HDM-2830 ONLY)	
⚠ 1-551-812-11	CORD, POWER (HDM-2830 ONLY)	
⚠ 1-532-350-11	FUSE, TIME-LAG 4A/250V (HDM-2830E ONLY)	
⚠ 1-534-819-14	POWER CORD(HDM-2830E ONLY)	
1-560-776-00	SOCKET, CONNECTOR 10P	
1-564-662-11	PLUG, BNC (75 OHM)	
*2-990-242-01	HOLDER (B), PLUG	
4-353-737-00	PLATE, NUMBER, TALLY	
*4-359-683-00	BAG, PROTECTION	
4-378-901-01	KEY	
*4-383-359-01	CUSHION (UPPER FRONT)	
*4-383-360-01	CUSHION (UPPER REAR)	
*4-383-363-01	SHEET, POLYETHYLENE	
4-390-486-01	MANUAL, OPERATION & MAINTENANCE	
*4-393-021-01	INDIVIDUAL CARTON	
7-700-731-03	DRIVER, VR ADJUSTMENT	

4-390-486-02

Sony Corporation
VC Group

English
90HE09001-5
Printed in Japan
© 1989.3